Regione autonoma della Sardegna
(Provincia di Nuoro)

Comune di Macomer

CONSORZIO PER LA ZONA INDUSTRIALE DI MACOMER

PROGETTO ESECUTIVO
PER LA REALIZZAZIONE DI UNA NUOVA LINEA DI TERMOVALORIZZAZIONE DA 30 MWt PRESSO IL SISTEMA DI TRATTAMENTO RIFIUTI DI MACOMER/TOSSILO

ATI: AREAIMPIANTI - MONSUD S.p.A.

Progettista incaricato:
martino associati ingegneria e tecnologie ambientali

PROGETTO ESECUTIVO



AREA 200 EDIFICIO COLLEGAMENTO

TABULATI **C.7**

Sistema Qualità Certificato

UNI EN ISO 9001 (ISO 9001)
Certificato n° FS 587971

martino associati ingegneria e tecnologie ambientali

CODICE DESCRITTIVO: **ITV240FMRC716.00**			N° ALLEGATO: **C.7**		
0	01/01/2016	EMISSIONE	cambri	martino	martino
1	12/04/2016	REVISIONE	cambri	martino	martino
2					
3					
4					
revisione	***data***	***descrizione***	***redatto***	***controllato***	***approvato***

INDICE

1. DATI DI INPUT 5

1.1 ELEMENTI TIPO PILASTRO 6
1.2 ELEMENTI TIPO TRAVE 11
1.3 ELEMENTI TIPO TRAVE SU SUOLO ALLA WINKLER 17
1.4 ELEMENTI TIPO PLINTO SU SUOLO ALLA WINKLER 19
1.5 CONDIZIONI E COMBINAZIONI DI CARICO 21
1.6 DATI RELATIVI ALLE AREE DI CARICO 24
1.7 CARICHI APPLICATI AGLI ELEMENTI 28
1.8 STATO DEL PROGRAMMA: 45
1.9 TIPO DI ANALISI: 48
1.10 PARAMETRI DI CALCOLO ANALISI DINAMICA 50

2 DATI DI OUTPUT 53

2.1 SOLLECITAZIONI NEI PILASTRI 53
2.2 SOLLECITAZIONI NELLE TRAVI 167
2.3 SOLLECITAZIONI NELLE TRAVI DI FONDAZIONE 342
2.4 SOLLECITAZIONI NEI PLINTI 363

3. VERIFICHE 369

3.1 VERIFICHE TRAVI 369
3.2 VERIFICHE PILASTRI 431
3.3 VERIFICHE PLINTI 483
3.4 VERIFICHE ELEMENTI IN ACCIAIO 491
3.4.1 Percentuale di sfruttamento dei profilati metallici 491
3.4.2 Verifiche pilastro dal nodo 40 al nodo 86 / sez. 2 heb 300 (baraccatura) 492
3.4.3 Verifiche pilastro dal nodo 110 al nodo 170 / sez. 3 heb 200 (appoggio setto) 494
3.4.4 Verifiche trave dal nodo 25 al nodo 26 / sez. 2 hea 500 (carroponte inf.) 496
3.4.5 Verifiche trave dal nodo 132 al nodo 149 / sez. 6 tubi ret h 120x80x6.3 (baraccatura) 498
3.4.6 Verifiche trave dal nodo 176 al nodo 177 / sez. 9 heb 600 (trave_carroponte-sup) 500
3.4.7 Verifiche trave dal nodo 170 al nodo 174 / sez. 14 ipe 500 (appoggio-acciaio) 501
3.5 VERIFICHE ELEMENTI CABINA GRUISTA E SCALA ESTERNA 504
3.5.1 verifiche pilastro dal nodo 30 al nodo 32 / sez. 6 heb 120 (pilastro-scale) 504
3.5.2 verifiche pilastro dal nodo 2 al nodo 36 / sez. 5 hea 200 (pilastro-gruista) 506
3.5.3 verifiche trave dal nodo 1 al nodo 28 / sez. 17 upn 140 (cosciale-scale) 508
3.5.4 verifiche trave dal nodo 43 al nodo 44 / sez. 15 heb 140 (trave-gruista) 510
3.5.5 verifiche trave dal nodo 47 al nodo 52 / sez. 16 tubi quadri 100x5.6 (arcareccio-gruista) 512
3.6 VERIFICHE MURO DI CONTENIMENTO. 513
3.7 VERIFICHE VASCA FOSSA SCORIE 524
3.8 VERIFICHE SPOSTAMENTI SLD 531
Combinazioni agli Stati Limite di Danno 531
3.9 VERIFICHE RESISTENZA AL FUOCO 533

1. DATI DI INPUT

En.Ex.Sys. WinStrand

Structural Analisys & Design

Ditta produttrice:
En.Ex.Sys. s.r.l. - Via Tizzano 46/2 - Casalecchio di Reno (Bologna)

Sigla:
WinStrand

Piattaforma software:
Microsoft Windows XP Home, Microsoft Windows XP Home Professional

Documentazione in uso:
Manuale teorico - Manuale d'uso

Campo di applicazione:
Analisi statica e dinamica di strutture in campo elastico lineare.

Elementi finiti implementati

- Truss.
- Beam (Modellazione di Travi e Pilastri).
- Travi su suolo elastico alla Winckler.
- Plinti su suolo elastico alla Winckler.
- Elementi Shear Wall per la modellazione di pareti di taglio.
- Elementi shell (lastra/piastra) equivalenti.
- Elementi Isoparametrici a 8 Nodi Shell (lastra/piastra).

Schemi di Carico

- Carichi nodali concentrati.
- Carichi applicati direttamente agli elementi.
- Carichi Superficiali.

Tipo di Risoluzione

- Analisi statica e/o dinamica in campo lineare con il metodo dell'equilibrio.
- Fattorizzazione LDL^T.
- Analisi Statica:
    - modellazione generale 6 gradi di libertà per nodo.
    - ipotesi di solai infinitamente rigidi nel proprio piano (3 gradi di libertà per nodo + 3 per impalcato).
- Analisi dinamica. (Nel caso di analisi modale gli autovettori ed autovalori possono essere calcolati mediante *subspace iteration* oppure tramite il *metodo dei vettori di Ritz*):
    - Via statica equivalente.
    - Modale con il metodo dello spettro di risposta.

Normativa di riferimento

La normativa italiana cui viene fatto riferimento nelle fasi di calcolo e progettazione è la seguente:

- Legge n. 1086 del 5 Novembre 1971. *"Norme per la disciplina delle opere di conglomerato cementizio armato, normale e precompresso, ed a struttura metallica"*.
- Legge n. 64 del 2 Febbraio 1974. *"Provvedimenti per le costruzioni con particolari prescrizioni per le zone sismiche"*.
- D.M. del 3 Marzo 1975. *"Approvazione delle norme tecniche per le costruzioni in zone sismiche"*.
- D.M. del 3 Marzo 1975. *"Disposizioni concernenti l'applicazione delle norme tecniche per le costruzioni in zone sismiche"*.
- D.M. del 3 Ottobre 1978. *"Criteri generali per la verifica della sicurezza delle costruzioni e dei carichi e sovraccarichi"*.
- D.M. del 14 Febbraio 1992. *"Norme Tecniche per l'esecuzione delle opere in C.A. normale e precompresso e per le strutture metalliche"*.
- *Istruzioni per la valutazione delle: Azioni sulle Costruzioni*. (C.N.R. 10012/85)
- D.M. del 9 Gennaio 1996. *"Norme Tecniche per il calcolo, l'esecuzione ed il collaudo delle strutture in cemento armato, normale e precompresso e per le strutture metalliche"*.
- D.M. del 16 Gennaio 1996. *"Norme tecniche relative ai «Criteri generali per la verifica di sicurezza delle costruzioni e dei carichi e sovraccarichi»"*.
- D.M del 16 Gennaio 1996. *"Norme tecniche per le costruzioni in zone sismiche"*
- Ordinanza n. 3274 del 20 Marzo 2003. *"Primi elementi in materia di criteri generali per la classificazione sismica del territorio nazionale e di normative tecniche per le costruzioni in zona sismica"*
- Ordinanza n. 3316. *"Modifiche ed integrazioni all'ordinanza del Presidente del Consiglio dei Ministri n. 3274 del 20 Marzo 2003"*
- D.M. del 14 Gennaio 2008 *"Approvazione delle nuove norme tecniche per le costruzioni"*

1.1 Elementi tipo pilastro

Convenzioni adottate

Ogni elemento tipo pilastro viene identificato da:

- Il nodo iniziale **i**;
- Il nodo finale **j**;
- Il nodo **k** che definisce l'orientamento nello spazio della terna riferimento locale dell'elemento.

La terna di riferimento locale del pilastro risulta quindi essere cosi disposta:



Sistema di riferimento locale

Vengono riportati i valori di efficacia dei vincoli flessionali alle estremità dell'elemento (variabili fra lo **0%** e il **100%**), nei due piani **1-2** e **1-3** del pilastro in corrispondenza dei nodi, dando quindi la possibilità di considerare aste non perfettamente incastrate alle estremità (coefficienti **Vi12 - Vj12 - Vi13 - Vj13**).

In generale, se non diversamente disposto, l'asse 2 coincide, per i pilastri, con l'asse **y** globale e pertanto la disposizione della sezione coincide con quella che si avrebbe in una vista in pianta.

Caratteristiche dei Materiali:

Tipo	Modulo Elastico [kg/cm²]	v	alfa [1/°C]	Peso Specifico [kg/m³]	Commento
1	300000.0	0.120	0.000012	2500.0	Calcestruzzo
2	2100000.0	0.330	0.000012	7850.0	Acciaio

Sezioni Impiegate:

Sezione	Materiale	Tipo di Sezione	Parametri Dimensionali Commenti
1	1	Rett.	B= 80 H= 100 [cm] Pil 80x100
2	2	HEB 300	Baraccatura
3	2	HEB 200	Appoggio setto
4	1	Rett.	B= 80 H= 80 [cm] Pil 80x80
11	1	a Tr	B= 55 H= 70 b= 25 h= 45 [cm] T rovescia

Caratteristiche Inerziali:

Sezione	Materiale	Area [cm²]	Jt [cm^4]	J2 [cm^4]	J3 [cm^4]	J23 [cm^4]	Xx	Xy
1	1	8000.00	8428855	6666666	4266666	0	1.2	1.2
2	2	149.34	185	25204	8564	0	4.2	1.4
3	2	78.20	59	5703	2004	0	4.1	1.4
4	1	6400.00	5757983	3413333	3413333	0	1.2	1.2
11	1	3100.00	1343943	1061473	656458	0	1.2	1.2

Piano	Pilastro	Nodo i	Nodo j	Nodo k	Materiale	Sezione	Luce [m]	Vi12	Vj12	Vi13	Vj13
0	1	1	22	10096	1	1	6.70	100	100	100	100
0	22	22	34	10096	1	1	2.25	100	100	100	100
0	34	34	72	10096	1	1	3.25	100	100	100	100
0	72	72	89	10096	1	1	1.00	100	100	100	100
0	89	89	111	10096	1	1	1.00	100	100	100	100
1	111	111	132	10096	1	1	1.00	100	100	100	100

Piano	Pilastro	Nodo i	Nodo j	Nodo k	Materiale	Sezione	Luce [m]	Vi12	Vj12	Vi13	Vj13
1	132	132	153	10096	1	1	1.00	100	100	100	100
1	153	153	167	10096	1	1	2.40	100	100	100	100
1	167	167	184	10096	1	1	3.34	100	100	100	100
0	2	2	35	10125	2	2	8.95	100	100	100	100
0	35	35	82	10126	2	2	3.25	100	100	100	100
0	82	82	103	10126	2	2	1.00	100	100	100	100
1	103	103	125	10127	2	2	1.00	100	100	100	100
1	125	125	146	10127	2	2	1.00	100	100	100	100
1	146	146	154	10127	2	2	1.00	100	100	100	100
1	154	154	185	10127	2	2	5.74	100	100	100	100
0	3	3	36	10128	2	2	8.95	100	100	100	100
0	36	36	83	10130	2	2	3.25	100	100	100	100
0	83	83	104	10129	2	2	1.00	100	100	100	100
1	104	104	126	10130	2	2	1.00	100	100	100	100
1	126	126	147	10130	2	2	1.00	100	100	100	100
1	147	147	155	10130	2	2	1.00	100	100	100	100
1	155	155	186	10129	2	2	5.74	100	100	100	100
0	4	4	37	10131	2	2	8.95	100	100	100	100
0	37	37	84	10132	2	2	3.25	100	100	100	100
0	84	84	105	10133	2	2	1.00	100	100	100	100
1	105	105	127	10155	2	2	1.00	100	100	100	100
1	127	127	148	10156	2	2	1.00	100	100	100	100
1	148	148	156	10157	2	2	1.00	100	100	100	100
1	156	156	187	10134	2	2	5.74	100	100	100	100
0	5	5	23	10104	1	1	6.70	100	100	100	100
0	23	23	38	10099	1	1	2.25	100	100	100	100
0	38	38	52	10103	1	1	3.10	100	100	100	100
0	52	52	73	10103	1	1	0.15	100	100	100	100
0	73	73	90	10103	1	1	1.00	100	100	100	100
0	90	90	112	10141	1	1	1.00	100	100	100	100
1	112	112	133	10141	1	1	1.00	100	100	100	100
1	133	133	157	10142	1	1	1.00	100	100	100	100
1	157	157	168	10102	1	1	2.40	100	100	100	100
1	168	168	188	10123	1	1	3.34	100	100	100	100
0	6	6	24	10105	1	1	6.70	100	100	100	100
0	24	24	56	10105	1	1	5.35	100	100	100	100
0	56	56	94	10105	1	1	1.15	100	100	100	100
0	94	94	116	10152	1	1	1.00	100	100	100	100
1	116	116	137	10153	1	1	1.00	100	100	100	100
1	137	137	161	10154	1	1	1.00	100	100	100	100
1	161	161	169	10101	1	1	2.40	100	100	100	100
1	169	169	192	10124	1	1	3.34	100	100	100	100
0	7	7	39	10069	2	2	8.95	100	100	100	100
0	39	39	85	10069	2	2	3.25	100	100	100	100
0	85	85	106	10069	2	2	1.00	100	100	100	100
1	106	106	128	10069	2	2	1.00	100	100	100	100
1	128	128	149	10069	2	2	1.00	100	100	100	100
1	149	149	162	10069	2	2	1.00	100	100	100	100

Piano	Pilastro	Nodo i	Nodo j	Nodo k	Materiale	Sezione	Luce [m]	Vi12	Vj12	Vi13	Vj13
1	162	162	195	10069	2	2	5.74	100	100	100	100
0	11	11	58	10242	1	1	12.05	100	100	100	100
0	12	12	40	10069	2	2	8.95	100	100	100	100
0	40	40	86	10069	2	2	3.25	100	100	100	100
0	86	86	107	10069	2	2	1.00	100	100	100	100
1	107	107	129	10069	2	2	1.00	100	100	100	100
1	129	129	150	10069	2	2	1.00	100	100	100	100
1	150	150	163	10069	2	2	1.00	100	100	100	100
1	163	163	196	10069	2	2	5.74	100	100	100	100
0	13	13	31	10119	1	4	6.70	100	100	100	100
0	31	31	41	10119	1	4	2.25	100	100	100	100
0	41	41	87	10119	1	4	3.25	100	100	100	100
0	87	87	108	10119	1	4	1.00	100	100	100	100
1	108	108	130	10119	1	4	1.00	100	100	100	100
1	130	130	151	10119	1	4	1.00	100	100	100	100
1	151	151	164	10119	1	4	1.00	100	100	100	100
1	164	164	197	10119	1	4	5.74	100	100	100	100
1	197	197	203	10119	1	4	0.33	100	100	100	100
0	14	14	32	10224	1	4	6.70	100	100	100	100
0	32	32	45	10223	1	4	2.25	100	100	100	100
0	45	45	59	10219	1	4	3.10	100	100	100	100
0	15	15	33	10222	1	4	6.70	100	100	100	100
0	33	33	63	10221	1	4	5.35	100	100	100	100
0	17	17	46	10069	2	2	8.95	100	100	100	100
0	46	46	88	10069	2	2	3.25	100	100	100	100
0	88	88	109	10069	2	2	1.00	100	100	100	100
1	109	109	131	10069	2	2	1.00	100	100	100	100
1	131	131	152	10069	2	2	1.00	100	100	100	100
1	152	152	165	10069	2	2	1.00	100	100	100	100
1	165	165	198	10069	2	2	5.74	100	100	100	100
0	18	18	47	10110	1	1	8.95	100	100	100	100
0	47	47	74	10110	1	1	3.25	100	100	100	100
0	74	74	95	10110	1	1	1.00	100	100	100	100
0	95	95	117	10110	1	1	1.00	100	100	100	100
1	117	117	138	10110	1	1	1.00	100	100	100	100
1	138	138	166	10110	1	1	1.00	100	100	100	100
1	166	166	180	10110	1	1	2.40	100	100	100	100
1	180	180	199	10110	1	1	3.34	100	100	100	100
1	199	199	205	10110	1	1	0.52	100	100	100	100
0	19	19	51	10040	1	1	8.95	100	100	100	100
0	51	51	65	10039	1	1	3.10	100	100	100	100
0	65	65	75	10038	1	1	0.15	100	100	100	100
0	75	75	96	10038	1	1	1.00	100	100	100	100
0	96	96	118	10038	1	1	1.00	100	100	100	100
1	118	118	139	10038	1	1	1.00	100	100	100	100
1	139	139	181	10037	1	1	3.40	100	100	100	100
1	181	181	207	10036	1	1	3.86	100	100	100	100
0	20	20	69	10035	1	1	12.05	100	100	100	100

Piano	Pilastro	Nodo i	Nodo j	Nodo k	Materiale	Sezione	Luce [m]	Vi12	Vj12	Vi13	Vj13
0	69	69	79	10034	1	1	0.15	100	100	100	100
0	79	79	100	10033	1	1	1.00	100	100	100	100
1	100	100	122	10032	1	1	1.00	100	100	100	100
1	122	122	143	10031	1	1	1.00	100	100	100	100
1	143	143	182	10030	1	1	3.40	100	100	100	100
1	182	182	211	10029	1	1	3.86	100	100	100	100
0	21	21	71	10100	1	1	12.05	100	100	100	100
0	71	71	81	10028	1	1	0.15	100	100	100	100
0	81	81	102	10028	1	1	1.00	100	100	100	100
1	102	102	124	10028	1	1	1.00	100	100	100	100
1	124	124	145	10028	1	1	1.00	100	100	100	100
1	145	145	183	10027	1	1	3.40	100	100	100	100
1	183	183	213	10026	1	1	3.86	100	100	100	100
0	53	53	91	10135	2	2	1.15	100	100	100	100
0	91	91	113	10143	2	2	1.00	100	100	100	100
1	113	113	134	10144	2	2	1.00	100	100	100	100
1	134	134	158	10145	2	2	1.00	100	100	100	100
1	158	158	189	10136	2	2	5.74	100	100	100	100
0	54	54	92	10138	2	2	1.15	100	100	100	100
0	92	92	114	10146	2	2	1.00	100	100	100	100
1	114	114	135	10147	2	2	1.00	100	100	100	100
1	135	135	159	10148	2	2	1.00	100	100	100	100
1	159	159	190	10137	2	2	5.74	100	100	100	100
0	55	55	93	10139	2	2	1.15	100	100	100	100
0	93	93	115	10149	2	2	1.00	100	100	100	100
1	115	115	136	10150	2	2	1.00	100	100	100	100
1	136	136	160	10151	2	2	1.00	100	100	100	100
1	160	160	191	10140	2	2	5.74	100	100	100	100
0	66	66	76	10025	2	2	0.15	100	100	100	100
0	76	76	97	10024	2	2	1.00	100	100	100	100
0	97	97	119	10023	2	2	1.00	100	100	100	100
1	119	119	140	10022	2	2	1.00	100	100	100	100
1	140	140	208	10021	2	2	7.26	100	100	100	100
0	67	67	77	10020	2	2	0.15	100	100	100	100
0	77	77	98	10019	2	2	1.00	100	100	100	100
0	98	98	120	10018	2	2	1.00	100	100	100	100
1	120	120	141	10017	2	2	1.00	100	100	100	100
1	141	141	209	10016	2	2	7.26	100	100	100	100
0	68	68	78	10015	2	2	0.15	100	100	100	100
0	78	78	99	10014	2	2	1.00	100	100	100	100
0	99	99	121	10013	2	2	1.00	100	100	100	100
1	121	121	142	10012	2	2	1.00	100	100	100	100
1	142	142	210	10011	2	2	7.26	100	100	100	100
0	70	70	80	10010	2	2	0.15	100	100	100	100
0	80	80	101	10010	2	2	1.00	100	100	100	100
1	101	101	123	10010	2	2	1.00	100	100	100	100
1	123	123	144	10010	2	2	1.00	100	100	100	100
1	144	144	212	10009	2	2	7.26	100	100	100	100

Piano	Pilastro	Nodo i	Nodo j	Nodo k	Materiale	Sezione	Luce [m]	Vi12	Vj12	Vi13	Vj13
1	110	110	170	10239	2	3	5.00	100	100	100	100
1	170	170	193	10115	2	3	3.34	100	0	100	100

1.2 Elementi tipo trave

Convenzioni adottate

Ogni elemento tipo trave viene identificato da:

- Il nodo iniziale **i**;
- Il nodo finale **j**;
- Il nodo **k** che definisce l'orientamento nello spazio della terna riferimento locale dell'elemento.

La terna di riferimento locale della trave risulta essere così disposta:



Vengono riportati i valori di efficacia dei vincoli alle estreità dello elemento (variabili fra 0 e 100%), nei due piani **1-2** e **1-3** della trave in corrispondenza dei nodi, dando quindi la possibilità di considerare aste non perfettamente incastrate (coefficienti **Vi12, Vj12, Vi13, Vj13**).

Caratteristiche dei Materiali:

Tipo	Modulo Elastico [kg/cm²]	v	alfa [1/°C]	Peso Specifico [kg/m³]	Commento
1	300000.0	0.120	0.000012	2500.0	Calcestruzzo
2	2100000.0	0.330	0.000012	7850.0	Acciaio

Sezioni Impiegate:

Sezione	Materiale	Tipo di Sezione	Parametri Dimensionali Commenti
1	1	a _|	B= 55 H= 70 b= 40 h= 45 [cm] Soppalco
2	2	HEA 500	Carroponte inf.
3	1	a |~	B= 55 H= 70 b= 30 h= 40 [cm] Copertura
4	1	a T	B= 60 H= 80 b= 30 h= 30 [cm] Tegoli
5	1	Rett.	B= 30 H= 25 [cm] Cordolo
6	2	Tubi Ret H 120x80x6.3	Baraccatura
7	1	a L	B= 50 H= 70 b= 35 h= 45 [cm] L ridotta
8	1	Rett.	B= 80 H= 50 [cm] Appoggio
9	2	HEB 600	Trave_carroponte-sup
10	2	FUNI 4ø90	Controventi solai
11	1	a Tr	B= 55 H= 70 b= 25 h= 45 [cm] T rovescia
12	1	Rett.	B= 30 H= 40 [cm] Cordolo copertura
13	1	a |~	B= 65 H= 70 b= 43 h= 40 [cm] Copertura
14	2	IPE 500	Appoggio-acciaio

Caratteristiche Inerziali:

Sezione	Materiale	Area [cm²]	Jt [cm^4]	J2 [cm^4]	J3 [cm^4]	J23 [cm^4]	Xx	Xy
1	1	3475.00	1703892	1342221	797303	186960	1.2	1.2
2	2	197.80	309	87092	10368	0	3.3	1.5
3	1	3100.00	1237874	1143253	721882	279436	1.2	1.2
4	1	3300.00	1230673	1756591	652500	-0	1.2	1.2
5	1	750.00	74913	39062	56250	0	1.2	1.2
6	2	21.53	471	205	381	0	2.1	1.5
7	1	3125.00	1331560	1197010	593510	-165375	1.2	1.2
8	1	4000.00	1969616	833333	2133333	0	1.2	1.2
9	2	270.22	667	171218	13531	-0	2.9	1.6
10	2	223.12	0	1	1	0	1.0	1.0
11	1	3100.00	1343943	1061473	656458	0	1.2	1.2
12	1	1200.00	186385	160000	90000	0	1.2	1.2
13	1	3890.00	2106042	1499625	1218511	331951	1.2	1.2
14	2	115.68	89	48279	2142	-0	2.3	1.8

Travata	Trave	Nodo i	Nodo j	Nodo k	Materiale	Sezione	Luce [m]	Vi12	Vj12	Vi13	Vj13
1	1	188	207	10074	1	4	13.76	0	0	100	100
2	1	194	201	10100	1	4	4.00	100	100	100	100
3	1	200	202	10081	1	4	2.90	100	100	100	100
3	2	202	203	10081	1	4	3.06	100	100	100	100
3	3	203	204	10110	1	4	2.29	100	100	100	100
4	1	184	200	10110	1	4	2.90	100	100	100	100
5	1	204	205	10110	1	4	2.62	100	0	100	100

Travata	Trave	Nodo i	Nodo j	Nodo k	Materiale	Sezione	Luce [m]	Vi12	Vj12	Vi13	Vj13
6	1	186	206	10072	1	4	13.76	0	0	100	100
7	1	190	209	10071	1	4	13.76	0	0	100	100
8	1	201	213	10070	1	4	9.76	100	100	100	100
9	1	192	211	10073	1	4	13.76	0	0	100	100
14	1	25	26	10107	2	2	11.00	0	0	100	100
14	2	26	27	10107	2	2	10.00	0	0	100	100
15	1	28	29	10238	2	2	11.00	0	0	100	100
15	2	29	30	10237	2	2	10.00	0	0	100	100
16	1	34	35	10094	1	5	2.75	100	100	100	100
16	2	35	36	10094	1	5	2.75	100	100	100	100
16	3	36	37	10094	1	5	2.75	100	100	100	100
16	4	37	38	10094	1	5	2.75	100	100	100	100
17	1	41	42	10232	1	5	2.75	100	100	100	100
17	2	42	43	10231	1	5	2.75	100	100	100	100
17	3	43	44	10230	1	5	2.75	100	100	100	100
17	4	44	45	10229	1	5	2.75	100	100	100	100
18	1	47	48	10069	1	5	2.75	100	100	100	100
18	2	48	49	10069	1	5	2.75	100	100	100	100
18	3	49	50	10068	1	5	2.75	100	100	100	100
18	4	50	51	10067	1	5	2.75	100	100	100	100
19	1	52	53	10217	1	5	2.50	100	100	100	100
19	2	53	54	10217	1	5	2.50	100	100	100	100
19	3	54	55	10217	1	5	2.49	100	100	100	100
19	4	55	56	10217	1	5	2.50	100	100	100	100
20	1	57	58	10243	1	5	5.00	100	100	100	100
21	1	59	60	10228	1	1	2.50	100	100	100	100
21	2	60	61	10227	1	1	2.50	100	100	100	100
21	3	61	62	10226	1	1	2.49	100	100	100	100
21	4	62	63	10225	1	1	2.50	100	100	100	100
22	1	65	66	10066	1	7	2.50	100	100	100	100
22	2	66	67	10065	1	7	2.50	100	100	100	100
22	3	67	68	10064	1	7	2.49	100	100	100	100
22	4	68	69	10063	1	7	2.50	100	100	100	100
22	5	69	70	10063	1	7	2.50	100	100	100	100
22	6	70	71	10063	1	7	2.50	100	100	100	100
23	1	72	82	10193	2	6	2.75	100	100	100	100
23	2	82	83	10192	2	6	2.75	100	100	100	100
23	3	83	84	10191	2	6	2.75	100	100	100	100
23	4	84	73	10190	2	6	2.75	100	100	100	100
24	1	75	76	10062	2	6	2.50	100	100	100	100
24	2	76	77	10061	2	6	2.50	100	100	100	100
24	3	77	78	10060	2	6	2.49	100	100	100	100
24	4	78	79	10059	2	6	2.50	100	100	100	100
24	5	79	80	10059	2	6	2.50	100	100	100	100
24	6	80	81	10059	2	6	2.50	100	100	100	100
25	1	89	103	10158	2	6	2.75	100	100	100	100
25	2	103	104	10159	2	6	2.75	100	100	100	100
25	3	104	105	10160	2	6	2.75	100	100	100	100

Travata	Trave	Nodo i	Nodo j	Nodo k	Materiale	Sezione	Luce [m]	Vi12	Vj12	Vi13	Vj13
25	4	105	90	10161	2	6	2.75	100	100	100	100
25	5	90	91	10162	2	6	2.50	100	100	100	100
25	6	92	91	10163	2	6	2.50	100	100	100	100
25	7	93	92	10164	2	6	2.49	100	100	100	100
25	8	93	94	10165	2	6	2.50	100	100	100	100
26	1	96	97	10058	2	6	2.50	100	100	100	100
26	2	97	98	10057	2	6	2.50	100	100	100	100
26	3	98	99	10056	2	6	2.49	100	100	100	100
26	4	99	100	10055	2	6	2.50	100	100	100	100
26	5	100	101	10055	2	6	2.50	100	100	100	100
26	6	101	102	10055	2	6	2.50	100	100	100	100
27	1	111	125	10166	2	6	2.75	100	100	100	100
27	2	125	126	10167	2	6	2.75	100	100	100	100
27	3	126	127	10168	2	6	2.75	100	100	100	100
27	4	127	112	10169	2	6	2.75	100	100	100	100
27	5	112	113	10170	2	6	2.50	100	100	100	100
27	6	114	113	10171	2	6	2.50	100	100	100	100
27	7	115	114	10172	2	6	2.49	100	100	100	100
27	8	115	116	10173	2	6	2.50	100	100	100	100
28	1	118	119	10054	2	6	2.50	100	100	100	100
28	2	119	120	10053	2	6	2.50	100	100	100	100
28	3	120	121	10052	2	6	2.49	100	100	100	100
28	4	121	122	10051	2	6	2.50	100	100	100	100
28	5	122	123	10051	2	6	2.50	100	100	100	100
28	6	123	124	10051	2	6	2.50	100	100	100	100
29	1	132	146	10174	2	6	2.75	100	100	100	100
29	2	146	147	10175	2	6	2.75	100	100	100	100
29	3	147	148	10176	2	6	2.75	100	100	100	100
29	4	148	133	10177	2	6	2.75	100	100	100	100
29	5	133	134	10178	2	6	2.50	100	100	100	100
29	6	135	134	10179	2	6	2.50	100	100	100	100
29	7	136	135	10180	2	6	2.49	100	100	100	100
29	8	136	137	10181	2	6	2.50	100	100	100	100
30	1	139	140	10050	2	6	2.50	100	100	100	100
30	2	140	141	10049	2	6	2.50	100	100	100	100
30	3	141	142	10048	2	6	2.49	100	100	100	100
30	4	142	143	10047	2	6	2.50	100	100	100	100
30	5	143	144	10047	2	6	2.50	100	100	100	100
30	6	144	145	10047	2	6	2.50	100	100	100	100
31	1	153	154	10182	2	6	2.75	100	100	100	100
31	2	154	155	10183	2	6	2.75	100	100	100	100
31	3	155	156	10184	2	6	2.75	100	100	100	100
31	4	156	157	10185	2	6	2.75	100	100	100	100
31	5	157	158	10186	2	6	2.50	100	100	100	100
31	6	159	158	10187	2	6	2.50	100	100	100	100
31	7	160	159	10188	2	6	2.49	100	100	100	100
31	8	160	161	10189	2	6	2.50	100	100	100	100
32	1	171	172	10107	2	9	11.00	0	0	100	100

Travata	Trave	Nodo i	Nodo j	Nodo k	Materiale	Sezione	Luce [m]	Vi12	Vj12	Vi13	Vj13
32	2	172	173	10107	2	9	10.00	0	0	100	100
32	3	173	174	10107	2	9	3.00	0	100	100	100
32	4	174	175	10107	2	9	2.00	100	100	100	100
33	1	176	177	10112	2	9	11.00	0	0	100	100
33	2	177	178	10113	2	9	10.00	0	0	100	100
33	3	178	179	10114	2	9	5.00	0	0	100	100
34	1	184	185	10075	1	3	2.75	100	100	100	100
34	2	185	186	10075	1	3	2.75	100	100	100	100
34	3	186	187	10075	1	3	2.75	100	100	100	100
34	4	187	188	10075	1	3	2.75	100	100	100	100
34	5	188	189	10075	1	3	2.50	100	100	100	100
34	6	189	190	10075	1	3	2.50	100	100	100	100
34	7	190	191	10075	1	3	2.49	100	100	100	100
34	8	191	192	10075	1	3	2.50	100	100	100	100
34	9	192	193	10075	1	3	3.00	100	100	100	100
34	10	193	194	10075	1	3	2.00	100	100	100	100
35	1	205	206	10046	1	13	5.50	100	100	100	100
35	2	206	207	10045	1	13	5.50	100	100	100	100
35	3	207	208	10044	1	13	2.50	100	100	100	100
35	4	208	209	10043	1	13	2.50	100	100	100	100
35	5	209	210	10042	1	13	2.49	100	100	100	100
35	6	210	211	10041	1	13	2.50	100	100	100	100
35	7	211	212	10041	1	13	2.50	100	100	100	100
35	8	212	213	10041	1	13	2.50	100	100	100	100
40	1	22	25	10109	1	8	0.50	100	100	100	100
41	1	28	31	10238	1	8	0.50	100	100	100	100
42	1	23	26	10108	1	8	0.50	100	100	100	100
43	1	32	29	10234	1	8	0.50	100	100	100	100
44	1	24	27	10107	1	8	0.50	100	100	100	100
45	1	30	33	10236	1	8	0.50	100	100	100	100
46	1	34	39	10069	1	1	2.95	100	100	100	100
46	2	39	40	10069	1	1	2.95	100	100	100	100
46	3	40	41	10069	1	1	2.95	100	100	100	100
46	4	41	46	10069	1	1	2.45	100	100	100	100
46	5	46	47	10069	1	1	2.45	100	100	100	100
47	1	35	42	10093	2	10	8.85	0	0	0	0
47	2	42	48	10091	2	10	4.90	0	0	0	0
48	1	36	43	10092	2	10	8.85	0	0	0	0
48	2	43	49	10090	2	10	4.90	0	0	0	0
49	1	37	44	10089	2	10	8.85	0	0	0	0
49	2	44	50	10088	2	10	4.90	0	0	0	0
50	1	38	45	10095	1	1	8.85	100	100	100	100
50	2	45	51	10087	1	1	4.90	100	100	100	100
51	1	52	59	10218	1	1	8.85	100	100	100	100
51	2	59	65	10218	1	1	4.90	100	100	100	100
52	1	53	60	10217	2	10	8.85	0	0	0	0
52	2	60	66	10216	2	10	4.90	0	0	0	0
53	1	61	54	10215	2	10	8.85	0	0	0	0

Travata	Trave	Nodo i	Nodo j	Nodo k	Materiale	Sezione	Luce [m]	Vi12	Vj12	Vi13	Vj13
53	2	61	67	10214	2	10	4.90	0	0	0	0
54	1	55	62	10213	2	10	8.85	0	0	0	0
54	2	62	68	10212	2	10	4.90	0	0	0	0
55	1	56	57	10004	1	1	5.15	100	100	100	100
55	2	57	63	10003	1	11	3.70	100	100	100	100
55	3	63	69	10211	1	11	4.90	100	100	100	100
56	1	58	64	10001	1	1	3.70	100	100	100	100
56	2	64	71	10220	1	1	4.90	100	100	100	100
57	1	72	85	10069	2	6	2.95	100	100	100	100
57	2	85	86	10069	2	6	2.95	100	100	100	100
57	3	86	87	10069	2	6	2.95	100	100	100	100
57	4	87	88	10069	2	6	2.45	100	100	100	100
57	5	88	74	10069	2	6	2.45	100	100	100	100
58	1	89	106	10069	2	6	2.95	100	100	100	100
58	2	106	107	10069	2	6	2.95	100	100	100	100
58	3	107	108	10069	2	6	2.95	100	100	100	100
58	4	108	109	10069	2	6	2.45	100	100	100	100
58	5	109	95	10069	2	6	2.45	100	100	100	100
59	1	111	128	10069	2	6	2.95	100	100	100	100
59	2	128	129	10069	2	6	2.95	100	100	100	100
59	3	129	130	10069	2	6	2.95	100	100	100	100
59	4	130	131	10069	2	6	2.45	100	100	100	100
59	5	131	117	10069	2	6	2.45	100	100	100	100
60	1	132	149	10069	2	6	2.95	100	100	100	100
60	2	149	150	10069	2	6	2.95	100	100	100	100
60	3	150	151	10069	2	6	2.95	100	100	100	100
60	4	151	152	10069	2	6	2.45	100	100	100	100
60	5	152	138	10069	2	6	2.45	100	100	100	100
61	1	153	162	10069	2	6	2.95	100	100	100	100
61	2	162	163	10069	2	6	2.95	100	100	100	100
61	3	163	164	10069	2	6	2.95	100	100	100	100
61	4	164	165	10069	2	6	2.45	100	100	100	100
61	5	165	166	10069	2	6	2.45	100	100	100	100
62	1	167	171	10109	1	8	0.50	100	100	100	100
63	1	176	180	10112	1	8	0.65	100	100	100	100
64	1	168	172	10106	1	8	0.50	100	100	100	100
65	1	177	181	10113	1	8	0.65	100	100	100	100
66	1	169	173	10107	1	8	0.50	100	100	100	100
67	1	178	182	10114	1	8	0.65	100	100	100	100
68	1	170	174	10116	2	14	0.50	100	100	100	100
69	1	179	183	10111	1	8	0.65	100	100	100	100
70	1	184	195	10069	1	12	2.95	100	100	100	100
70	2	195	196	10069	1	12	2.95	100	100	100	100
70	3	196	197	10069	1	12	2.95	100	100	100	100
70	4	197	198	10069	1	12	2.45	100	100	100	100
70	5	198	199	10069	1	12	2.45	100	100	100	100
71	1	64	69	10196	2	10	7.00	0	0	0	0
72	1	63	71	10197	2	10	7.00	0	0	0	0

Travata	Trave	Nodo i	Nodo j	Nodo k	Materiale	Sezione	Luce [m]	Vi12	Vj12	Vi13	Vj13
72	2	63	58	10000	2	10	6.22	0	0	0	0
73	1	57	64	10002	2	10	6.22	0	0	0	0
74	1	52	60	10118	2	10	9.20	0	0	0	0
74	2	60	54	10198	2	10	9.20	0	0	0	0
74	3	54	62	10199	2	10	9.19	0	0	0	0
74	4	62	56	10200	2	10	9.20	0	0	0	0
75	1	59	66	10201	2	10	5.50	0	0	0	0
75	2	66	61	10202	2	10	5.50	0	0	0	0
75	3	61	68	10203	2	10	5.50	0	0	0	0
75	4	68	63	10204	2	10	5.50	0	0	0	0
76	1	69	62	10205	2	10	5.50	0	0	0	0
76	2	62	67	10206	2	10	5.50	0	0	0	0
76	3	67	60	10207	2	10	5.50	0	0	0	0
76	4	60	65	10208	2	10	5.50	0	0	0	0
77	1	59	53	10209	2	10	9.20	0	0	0	0
77	2	53	61	10210	2	10	9.20	0	0	0	0
78	1	44	49	10076	2	10	5.62	0	0	0	0
78	2	51	44	10077	2	10	5.62	0	0	0	0
79	1	50	45	10078	2	10	5.62	0	0	0	0
79	2	43	50	10079	2	10	5.62	0	0	0	0
79	3	48	43	10080	2	10	5.62	0	0	0	0
79	4	41	48	10081	2	10	5.62	0	0	0	0
79	5	35	41	10097	2	10	9.27	0	0	0	0
79	6	43	35	10097	2	10	9.27	0	0	0	0
79	7	37	43	10082	2	10	9.27	0	0	0	0
79	8	45	37	10083	2	10	9.27	0	0	0	0
80	1	44	38	10084	2	10	9.27	0	0	0	0
80	2	36	44	10098	2	10	9.27	0	0	0	0
80	3	42	36	10098	2	10	9.27	0	0	0	0
80	4	34	42	10117	2	10	9.27	0	0	0	0
80	5	42	47	10085	2	10	5.62	0	0	0	0
80	6	49	42	10086	2	10	5.62	0	0	0	0
81	1	61	55	10194	2	10	9.19	0	0	0	0
81	2	55	63	10195	2	10	9.20	0	0	0	0

1.3 Elementi tipo trave su suolo alla Winkler

Convenzioni adottate

Ogni elemento tipo trave su suolo alla Winkler viene identificato da:

- Il nodo iniziale *i*;
- il nodo finale *j*;
- il nodo *k* che definisce l'orientamento nello spazio della terna riferimento locale dell'elemento.

La terna di riferimento locale della trave risulta essere così disposta:

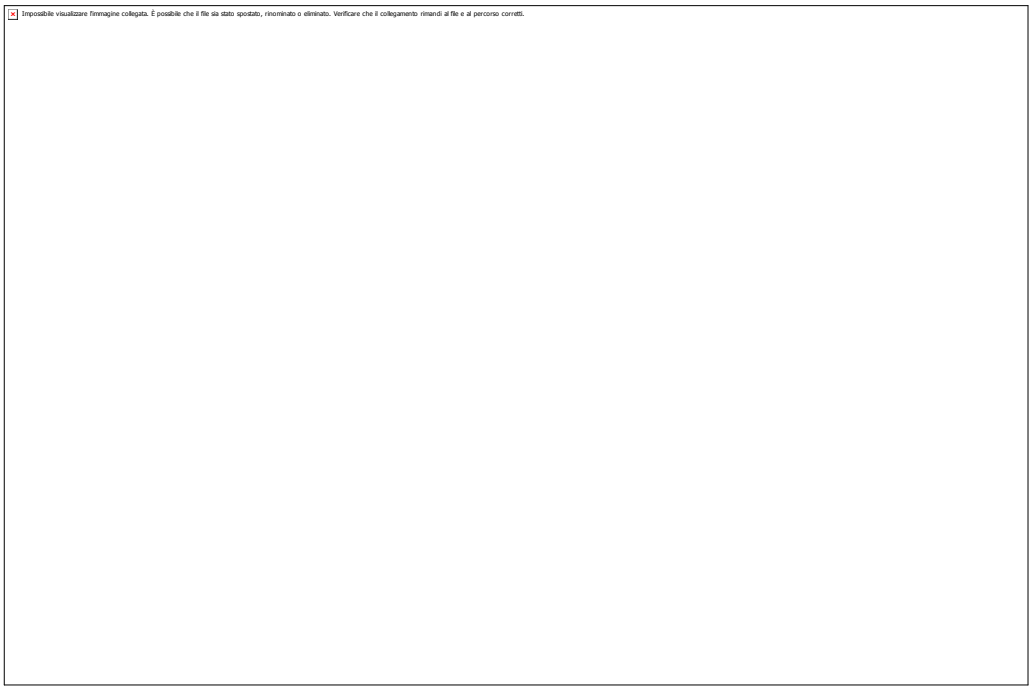

1. La modellazione del terreno sul quale agiscono le travi è alla Winkler e pertanto particolare attenzione va riposta ai casi in cui le travi inducano sul terreno zone di trazione poichè, in tal caso, la modellazione stessa cade in difetto.

Caratteristiche dei Materiali:

Tipo	Modulo Elastico [kg/cm²]	v	alfa [1/°C]	Peso Specifico [kg/m³]	Commento
1	300000.0	0.120	0.000012	2500.0	Calcestruzzo
2	2100000.0	0.330	0.000012	7850.0	Acciaio

Caratteristiche dei Terreni di Fondazione:

Tipo	Costante di Sottofondo [kg/cm³]	Commento
1	10.0	Default

Sezioni Impiegate:

Sezione	Materiale	Tipo di Sezione	Parametri Dimensionali Commenti
1	1	Rett.	B= 40 H= 30 [cm] Terreno numero 1 Default Cordolo_fondazione
2	1	Rett.	B= 85 H= 30 [cm] Terreno numero 1 Default Cordolo_fondazione-2
3	1	Rett.	B= 120 H= 30 [cm] Terreno numero 1 Default Cordolo_fondazione-2

Caratteristiche Inerziali:

Sezione	Materiale	Area [cm²]	Jt [cm^4]	J2 [cm^4]	J3 [cm^4]	J23 [cm^4]	Xx	Xy
1	1	1200.00	186385	90000	160000	0	1.2	1.2
2	1	2550.00	631218	191250	1535312	0	1.2	1.2
3	1	3600.00	997002	270000	4319999	0	1.2	1.2

Travata	Trave	Nodo i	Nodo j	Nodo k	Materiale	Sezione	Luce [m]
10	1	1	2	10118	1	3	2.75
10	2	2	3	10118	1	3	2.75
10	3	3	4	10118	1	3	2.75
10	4	4	5	10118	1	3	2.75
10	5	5	6	10118	1	1	10.00
11	1	9	10	10240	1	1	10.00
11	2	10	11	10241	1	1	5.00
12	1	13	14	10235	1	1	11.00
12	2	14	15	10234	1	1	10.00
12	3	15	16	10233	1	1	5.00
13	1	18	19	10069	1	1	11.00
13	2	19	20	10069	1	1	10.00
13	3	20	21	10069	1	1	5.00
36	1	1	7	10069	1	2	2.95
36	2	7	8	10069	1	2	1.05
36	3	8	12	10069	1	2	1.90
36	4	12	13	10069	1	2	2.95
36	5	13	17	10069	1	2	2.45
36	6	17	18	10069	1	2	2.45
37	1	5	9	10008	1	1	5.15
37	2	9	14	10007	1	1	3.70
37	3	14	19	10122	1	1	4.90
38	1	6	10	10029	1	1	5.15
38	2	10	15	10006	1	1	3.70
38	3	15	20	10121	1	1	4.90
39	1	11	16	10005	1	1	3.70
39	2	16	21	10120	1	1	4.90

1.4 Elementi tipo plinto su suolo alla Winkler

Convenzioni adottate

L'elemento, con riferimento al piano *x-y*, risulta essere così disposto:



Il plinto viene identificato con il numero del nodo a cui fa capo.

Caratteristiche dei Materiali:

Tipo	Modulo Elastico [kg/cm²]	v	alfa [1/°C]	Peso Specifico [kg/m³]	Commento
1	300000.0	0.120	0.000012	2500.0	Calcestruzzo
2	2100000.0	0.330	0.000012	7850.0	Acciaio

Caratteristiche dei Terreni di Fondazione:

Tipo	Costante di Sottofondo [kg/cm³]	Commento
1	10.0	Default

Sezioni Impiegate:

Sezione	Materiale	Tipo di Sezione	Parametri Dimensionali Commenti
1	1	Plinto tozzo	B=200 H=200 Hp=80 [cm] Terreno numero 1 Default esterno
2	1	Plinto tozzo	B=140 H=200 Hp=80 [cm] Terreno numero 1 Default Plinto estremità
3	1	Plinto tozzo	B=200 H=150 Hp=80 [cm] Terreno numero 1 Default estremità alto

Nodo	Sezione	Materiale
1	1	1
5	1	1
6	2	1
11	2	1
13	1	1
14	1	1
15	1	1
18	3	1
19	3	1
20	1	1
21	2	1

1.5 Condizioni e combinazioni di carico

Convenzioni adottate

Nel seguito vengono riportate il numero di condizioni di carico statiche e dinamiche che sollecitano la struttura. Si noti che:

- Per quanto riguarda le condizioni di carico dinamiche, il programma assimila ogni direzione di ingresso del sisma, definita dal progettista, ad una condizione di carico. Pertanto qualora agiscano sulla struttura *n* condizioni di carico statiche e il progettista abbia supposto che la struttura venga sollecitata da un sisma entrante in *m* direzioni, la struttura stessa viene considerata del programma come soggetta ad *n* + *m* condizioni di carico.
- Le combinazioni di carico, definite dal progettista, combinano fra loro le *n* + *m* condizioni di carico ognuna partecipante alla combinazione *i-esima* secondo i fattori di partecipazione nel seguito riportati. N.B.: se la condizione *j-esima* ha fattore di partecipazione unitario, allora partecipa per intero alla combinazione *i-esima*.
- Le prime *n* condizioni sono sempre statiche mentre sono di origine dinamica le (eventuali) condizioni da *n+1* a *n+m*.

Condizioni di carico definite:

Condizione	
1	Peso proprio
2	Permanente Strutturale
3	Permanente NON Strutturale
4	Accidentale
5	Vento y
6	Neve
7	Vento x
8	Sisma 0SLV
9	Sisma 90SLV
10	Sisma 0SLD
11	Sisma 90SLD

Combinazioni agli Stati Limite Ultimi

Combinazione di carico numero

1	SLU Accidentale
2	SLU Vento y
3	SLU Neve
4	SLU Vento x

Comb.\Cond	1	2	3	4	5	6	7
1	1.3	1.3	1.3	1.5	0.9	0.75	
2	1.3	1.3	1.3	1.05	1.5	0.75	
3	1.3	1.3	1.3	1.05	0.9	1.5	
4	1.3	1.3	1.3	1.05		0.75	1.5

Combinazioni agli Stati Limite di Salvaguardia della Vita

Combinazione di carico numero

5	SLV Sisma 0
6	SLV Sisma 90

Comb.\Cond	1	2	3	4	8	9
5	1	1	1	0.6	1	0.3
6	1	1	1	0.6	0.3	1

Combinazioni RARE Stati Limite di Esercizio

Combinazione di carico numero

7	SLE R Accidentale
8	SLE R Vento y
9	SLE R Neve
10	SLE R Vento x

Comb.\Cond	1	2	3	4	5	6	7
7	1	1	1	1	0.6	0.5	
8	1	1	1	0.7	1	0.5	

9	1	1	1	0.7	0.6	1	
10	1	1	1	0.7		0.5	1

Combinazioni FREQUENTI Stati Limite di Esercizio

Combinazione di carico numero

11	SLE F Accidentale
12	SLE F Vento y
13	SLE F Neve
14	SLE F Vento x

Comb.\Cond	1	2	3	4	5	6	7
11	1	1	1	0.7		1	
12	1	1	1	0.6	0.2	1	
13	1	1	1	0.6		0.2	
14	1	1	1	0.6		1	0.2

Combinazioni QUASI PERMANENTI Stati Limite di Esercizio

Combinazione di carico numero

15	Q.Perm.

Comb.\Cond	1	2	3	4	5
15	1	1	1	1	1

Combinazioni agli Stati Limite di Danno

Combinazione di carico numero

16	SLD Sisma 0
17	SLD Sisma 90

Comb.\Cond	1	2	3	4	10	11
16	1	1	1	0.6	1	0.3

17	1	1	1	0.6	0.3		1

1.6 Dati relativi alle aree di carico

Convenzioni adottate

Nel seguito sono riportate le *aree di carico* definite nel progetto.

Un'*area di carico* è definita da una superfice contornata da travi di bordo ed i carichi superficiali su essa agenti vengono riportati dal programma sulle travi perimetrali in ragione dell'area di influenza relativa ad ogni trave e della direzione di orditura della superficie.

È importante rilevare che **la direzione di orditura viene assunta dal programma con riferimento al primo lato della superficie di carico e non con riferimento all'asse *x* globale della struttura**.

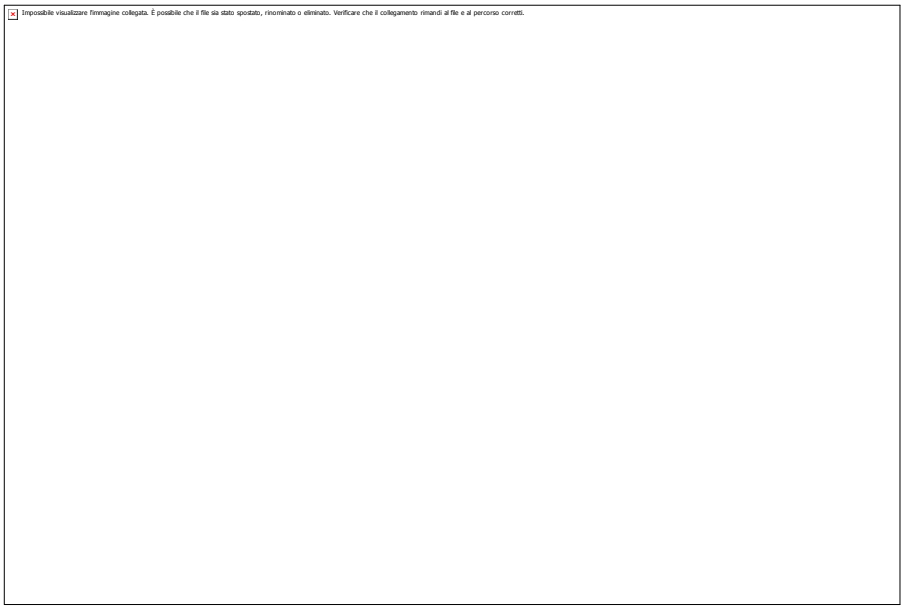

Esempio: *direzione* di orditura 0 gradi.

In particolare ricordiamo che le *aree di carico* fungono esclusivamente da supporto per il calcolo dei carichi di tipo superficiale in quanto i carichi definiti tramite tali *aree di carico* in effetti vengono trasferiti (sotto forma di carichi lineari o carichi nodali concentrati nei nodi) sulle travi perimetrali che contornano l'area di carico stessa.

A seguire vengono riportati per ogni tipologia definita i carichi agenti nelle varie condizioni di carico. La dizione:

Globale
indica che il carico è definito nel sistema di riferimento globale della struttura.

Globale Proiettato
indica che il carico è definito nel sistema di riferimento globale della struttura ma il valore viene computato in proiezione.

Locale
indica che il carico è definito nel sistema di riferimento locale della superficie di carico.

Area di Carico Numero	Commento
1	Solaio inferiore
2	Solaio superiore
3	Copertura
4	Baraccatura sopravento
5	Baraccatura sottovento
6	Baraccatura x

Tipo	Alfa	Condizione	Carico Trasmesso	Riferimento	qx [kg/m²] Qx [kg]	qy [kg/m²] Qy [kg]	qz [kg/m²] Qz [kg]
1	0.00	2	Alle Travi	Globale	0.0	0.0	500.0
					0.0	0.0	165875.0
1	0.00	3	Alle Travi	Globale	0.0	0.0	100.0
					0.0	0.0	33175.0
1	0.00	4	Alle Travi	Globale	0.0	0.0	200.0
					0.0	0.0	66350.0
2	0.00	2	Alle Travi	Globale	0.0	0.0	500.0
					0.0	0.0	0.0
2	0.00	3	Alle Travi	Globale	0.0	0.0	100.0
					0.0	0.0	0.0
2	0.00	4	Alle Travi	Globale	0.0	0.0	200.0
					0.0	0.0	0.0
3	0.00	2	Alle Travi	Globale	0.0	0.0	20.0
					0.0	0.0	14310.2
3	0.00	4	Alle Travi	Globale	0.0	0.0	50.0
					0.0	-0.0	35775.6
3	0.00	6	Alle Travi	Globale	0.0	0.0	96.0
					-0.0	0.0	68689.1
4	0.00	2	Alle Travi	Globale	0.0	0.0	20.0
					-0.0	0.0	6804.8
4	0.00	5	Alle Travi	Globale	0.0	-127.0	0.0
					0.0	-43210.5	0.0
5	0.00	2	Alle Travi	Globale	0.0	0.0	20.0
					0.0	0.0	3123.0
5	0.00	5	Alle Travi	Globale	0.0	-77.0	0.0
					0.0	-12023.5	0.0
6	0.00	2	Alle Travi	Globale	0.0	0.0	20.0
					0.0	0.0	6033.5
6	0.00	7	Alle Travi	Globale	100.0	0.0	0.0
					30167.5	0.0	0.0

Tipo Alfa Condizione	Carico Trasmesso	Riferimento	qx [kg/m²] Qx [kg]	qy [kg/m²] Qy [kg]	qz [kg/m²] Qz [kg]

Tipologia	Nodi
4	1 2 35 34 22 1
4	2 3 36 35 2
4	3 4 37 36 3
4	36 37 84 83 36
4	37 38 73 84 37
6	7 39 34 1 7
6	13 17 46 41 31 13
4	4 5 23 38 37 4
6	7 12 40 39 7
6	12 13 41 40 12
1	34 38 45 41 34
6	17 18 47 46 17
4	52 53 91 90 73 52
4	35 36 83 82 35
4	34 35 82 72 34
6	41 46 88 87 41
6	46 47 74 88 46
6	40 41 87 86 40
6	34 39 85 72 34
6	39 40 86 85 39
1	41 45 51 47 41
1	57 58 71 69 57
1	52 56 63 59 52
5	65 66 76 75 65
5	66 67 77 76 66
5	67 68 78 77 67
1	59 63 69 65 59
5	69 70 80 79 69
5	68 69 79 78 68
5	70 71 81 80 70
4	53 54 92 91 53
4	54 55 93 92 54
4	92 93 115 114 92
4	84 73 90 105 84
4	55 56 94 93 55
4	83 84 105 104 83
4	82 83 104 103 82
4	72 82 103 89 72
5	79 80 101 100 79
5	78 79 100 99 78
5	77 78 99 98 77

Tipologia	Nodi
5	75 76 97 96 75
5	76 77 98 97 76
6	85 86 107 106 85
6	72 85 106 89 72
5	80 81 102 101 80
4	91 92 114 113 91
4	90 91 113 112 90
6	87 88 109 108 87
6	86 87 108 107 86
6	88 74 95 109 88
4	114 115 136 135 114
4	115 116 137 136 115
4	113 114 135 134 113
4	112 113 134 133 112
6	108 109 131 130 108
6	107 108 130 129 107
6	109 95 117 131 109
4	103 104 126 125 103
4	105 90 112 127 105
4	104 105 127 126 104
4	89 103 125 111 89
6	89 106 128 111 89
6	106 107 129 128 106
5	98 99 121 120 98
5	99 100 122 121 99
5	100 101 123 122 100
5	101 102 124 123 101
5	97 98 120 119 97
5	96 97 119 118 96
4	93 94 116 115 93
4	136 137 161 160 136
5	118 119 140 139 118
4	135 136 160 159 135
4	127 112 133 148 127
4	148 133 157 156 148
4	133 134 158 157 133
4	134 135 159 158 134
4	125 126 147 146 125
4	111 125 146 132 111
5	119 120 141 140 119
5	120 121 142 141 120
5	122 123 144 143 122
5	121 122 143 142 121
5	123 124 145 144 123
4	146 147 155 154 146
4	126 127 148 147 126
4	147 148 156 155 147
4	132 146 154 153 132
6	111 128 149 132 111

Tipologia	Nodi
6	128 129 150 149 128
6	129 130 151 150 129
6	130 131 152 151 130
6	131 117 138 152 131
4	160 161 169 192 191 160
6	132 149 162 153 132
6	149 150 163 162 149
6	150 151 164 163 150
6	151 152 165 164 151
6	152 138 166 165 152
6	165 166 199 198 165
6	164 165 198 197 164
6	163 164 197 196 163
6	162 163 196 195 162
6	153 162 195 184 153
5	143 144 212 211 182 143
5	142 143 182 211 210 142
5	139 140 208 207 181 139
5	144 145 183 213 212 144
5	140 141 209 208 140
5	141 142 210 209 141
4	153 154 185 184 167 153
3	184 186 206 205 184
4	154 155 186 185 154
4	155 156 187 186 155
3	188 207 206 186 187 188
3	186 188 207 206 186
4	156 157 188 187 156
4	157 158 189 188 168 157
3	190 209 208 207 188 189 190
3	188 190 209 207 188
4	159 160 191 190 159
4	158 159 190 189 158
3	192 211 210 209 190 191 192
3	190 192 211 209 190
3	194 213 212 211 192 193 194
3	192 194 213 211 192
3	186 206 205 204 203 202 200 184 185 186

1.7 Carichi applicati agli elementi

Convenzioni adottate

I carichi applicati vengono raccolti nella tabella riportata alla fine del paragrafo e si intendono applicati nel sistema di riferimento locale dell'elemento.

Per la lettura della tabella si definiscono:

NodoI, NodoJ

I nodi iniziale/finale dell'asta o lato dell'elemento cui afferisce il carico

L

La distanza fra i suddetti nodi.

qxi, ..., qzj

Le componenti di un carico distribuito costante o variabile linearmente iniziali (indice i) e finale (indice j).

xi, xj

Le distanze, misurate a partire dal NodoI, dei punti di applicazione dei carichi qxi..qzj relativi a carichi distribuiti applicati su porzioni di un'asta.

Px, ..., Pz xApp

Le componenti di un Carico Concentrato applicato a distanza xApp dal NodoI.

Mx, ..., Mz xApp

Le componenti di una Coppia Concentrata applicata a distanza xApp dal NodoI.

Var Termica Assiale, ..., Var Termica Farfalla 13

Le variazioni termiche (Assiali ed a Farfalla) misurate in gradi Celsius.

mxi, ..., mzj

Le componenti di coppie distribuite costanti o variabili linearmente iniziali (indice i) e finale (indice j).

qS_x, qS_y, qS_z

carichi, per unità di superficie, applicati su elementi superficiali o facce di elementi solidi

Peso Proprio

Il valore del carico derivante dal peso proprio dell'elemento

Carichi distribuiti

Nodo I	Nodo J	L [m]	Condizione di carico	xi [m]	qxi [kg/m]	qyi [kg/m]	qzi [kg/m]	xj [m]	qxj [kg/m]	qyj [kg/m]	qzj [kg/m]
188	207	13.76	6	0.00	10.0	263.8	-0.0	13.76	10.0	264.0	-0.0
			4	0.00	5.2	137.4	-0.0	13.76	5.2	137.5	-0.0
			2	0.00	2.1	55.0	0.0	13.76	2.1	55.0	-0.0
			6	0.00	10.0	263.8	0.0	13.76	10.0	264.0	0.0
			4	0.00	5.2	137.4	0.0	13.76	5.2	137.5	0.0
			2	0.00	2.1	55.0	0.0	13.76	2.1	55.0	0.0
			6	0.00	9.1	240.0	-0.0	13.76	9.1	240.0	-0.0
			4	0.00	4.7	125.0	-0.0	13.76	4.7	125.0	-0.0
			2	0.00	1.9	50.0	-0.0	13.76	1.9	50.0	-0.0
			6	0.00	9.1	240.0	0.0	13.76	9.1	240.0	0.0
			4	0.00	4.7	125.0	0.0	13.76	4.7	125.0	0.0
			2	0.00	1.9	50.0	0.0	13.76	1.9	50.0	0.0
1	22	6.70	5	0.00	0.0	-174.6	0.0	6.70	0.0	-174.6	0.0
			2	0.00	27.5	0.0	0.0	6.70	27.5	0.0	0.0
22	34	2.25	5	0.00	0.0	-174.6	0.0	2.25	0.0	-174.6	0.0
			2	0.00	27.5	0.0	0.0	2.25	27.5	0.0	0.0
200	202	2.90	6	0.00	10.1	263.8	-0.0	2.90	10.1	263.7	-0.0
			4	0.00	5.3	137.4	-0.0	2.90	5.3	137.4	0.0
			2	0.00	2.1	55.0	-0.0	2.90	2.1	54.9	-0.0
34	72	3.25	5	0.00	0.0	-174.6	0.0	3.25	0.0	-174.6	0.0

			2	0.00	27.5	0.0	0.0	3.25	27.5	0.0	0.0
			7	0.00	0.0	0.0	-147.5	3.25	0.0	0.0	-147.5
			2	0.00	29.5	0.0	0.0	3.25	29.5	0.0	0.0
202	203	3.06	6	0.00	9.6	263.8	-0.0	3.06	9.6	263.7	-0.0
			4	0.00	5.0	137.4	0.0	3.06	5.0	137.4	0.0
			2	0.00	2.0	54.9	-0.0	3.06	2.0	54.9	-0.0
203	204	2.29	6	0.00	10.7	-263.7	0.0	2.29	10.7	-263.7	0.0
			4	0.00	5.6	-137.3	-0.0	2.29	5.6	-137.3	0.0
			2	0.00	2.2	-54.9	0.0	2.29	2.2	-54.9	0.0
184	200	2.90	6	0.00	10.1	-263.8	0.0	2.90	10.1	-263.8	0.0
			4	0.00	5.3	-137.4	0.0	2.90	5.3	-137.4	0.0
			2	0.00	2.1	-55.0	0.0	2.90	2.1	-55.0	0.0
204	205	2.62	6	0.00	9.5	-263.7	0.0	2.62	9.5	-263.7	0.0
			4	0.00	5.0	-137.3	0.0	2.62	4.9	-137.3	-0.0
			2	0.00	2.0	-54.9	0.0	2.62	2.0	-54.9	0.0
			6	2.62	9.5	-263.6	0.0	2.62	0.0	-0.0	0.0
			4	2.62	4.9	-137.3	0.0	2.62	0.0	-0.0	0.0
			2	2.62	2.0	-54.9	0.0	2.62	0.0	-0.0	0.0
186	206	13.76	6	0.00	10.0	263.8	-0.7	13.76	10.0	263.7	-0.7
			4	0.00	5.2	137.4	-0.4	13.76	5.2	137.3	-0.4
			2	0.00	2.1	55.0	-0.1	13.76	2.1	54.9	-0.1
			6	0.00	10.0	263.8	-0.7	13.76	10.0	264.0	-0.7
			4	0.00	5.2	137.4	-0.4	13.76	5.2	137.5	-0.4
			2	0.00	2.1	55.0	-0.1	13.76	2.1	55.0	-0.1
			6	0.00	10.0	263.8	-0.7	13.76	10.0	264.0	-0.7
			4	0.00	5.2	137.4	-0.4	13.76	5.2	137.5	-0.4
			2	0.00	2.1	55.0	-0.1	13.76	2.1	55.0	-0.1
			6	11.14	10.0	263.7	-0.7	13.76	10.0	263.7	-0.7
			4	11.14	5.2	137.3	-0.4	13.76	5.2	137.3	-0.4
			2	11.14	2.1	54.9	-0.1	13.76	2.1	54.9	-0.1
			6	8.86	10.0	263.7	-0.7	11.14	10.0	263.7	-0.7
			4	8.86	5.2	137.3	-0.4	11.14	5.2	137.3	-0.4
			2	8.86	2.1	54.9	-0.1	11.14	2.1	54.9	-0.1
			6	5.80	10.0	263.7	-0.7	8.86	10.0	263.7	-0.7
			4	5.80	5.2	137.4	-0.4	8.86	5.2	137.3	-0.4
			2	5.80	2.1	54.9	-0.1	8.86	2.1	54.9	-0.1
			6	2.90	10.0	263.8	-0.7	5.80	10.0	263.7	-0.7
			4	2.90	5.2	137.4	-0.4	5.80	5.2	137.4	-0.4
			2	2.90	2.1	55.0	-0.1	5.80	2.1	54.9	-0.1
			6	0.00	10.0	263.8	-0.7	2.90	10.0	263.8	-0.7
			4	0.00	5.2	137.4	-0.4	2.90	5.2	137.4	-0.4
			2	0.00	2.1	55.0	-0.1	2.90	2.1	55.0	-0.1
153	167	2.40	5	0.00	0.0	-174.6	0.0	2.40	0.0	-174.6	0.0
			2	0.00	27.5	0.0	0.0	2.40	27.5	0.0	0.0
190	209	13.76	6	0.00	9.1	240.0	-1.2	13.76	9.1	240.0	-1.2
			4	0.00	4.7	125.0	-0.6	13.76	4.7	125.0	-0.6
			2	0.00	1.9	50.0	-0.2	13.76	1.9	50.0	-0.2
			6	0.00	9.1	240.0	-1.2	13.76	9.1	240.0	-1.2
			4	0.00	4.7	125.0	-0.6	13.76	4.7	125.0	-0.6
			2	0.00	1.9	50.0	-0.2	13.76	1.9	50.0	-0.2

			6	0.00	9.1	239.7	-1.2	13.76	9.1	239.7	-1.2
			4	0.00	4.7	124.8	-0.6	13.76	4.7	124.8	-0.6
			2	0.00	1.9	49.9	-0.2	13.76	1.9	49.9	-0.2
			6	0.00	9.1	239.7	-1.2	13.76	9.1	239.7	-1.2
			4	0.00	4.7	124.8	-0.6	13.76	4.7	124.8	-0.6
			2	0.00	1.9	49.9	-0.2	13.76	1.9	49.9	-0.2
167	184	3.34	5	0.00	0.0	-174.6	0.0	3.34	0.0	-174.6	0.0
			2	0.00	27.5	0.0	0.0	3.34	27.5	0.0	0.0
2	35	8.95	5	6.70	0.0	-174.6	0.0	8.95	0.0	-174.6	0.0
			2	6.70	27.5	0.0	0.0	8.95	27.5	0.0	0.0
			5	0.00	0.0	-174.6	0.0	6.70	0.0	-174.6	0.0
			2	0.00	27.5	0.0	0.0	6.70	27.5	0.0	0.0
			5	0.00	0.0	-174.6	0.0	8.95	0.0	-174.6	0.0
			2	0.00	27.5	0.0	0.0	8.95	27.5	0.0	0.0
			1	0.00	81.5	0.0	0.0	8.95	81.5	0.0	0.0
192	211	13.76	6	0.00	9.1	239.7	0.0	13.76	9.1	239.7	0.0
			4	0.00	4.7	124.8	0.0	13.76	4.7	124.8	0.0
			2	0.00	1.9	49.9	0.0	13.76	1.9	49.9	0.0
			6	0.00	9.1	239.7	0.0	13.76	9.1	239.7	0.0
			4	0.00	4.7	124.8	0.0	13.76	4.7	124.8	0.0
			2	0.00	1.9	49.9	0.0	13.76	1.9	49.9	0.0
			6	0.00	9.1	239.8	-0.0	13.76	9.1	239.8	-0.0
			4	0.00	4.7	124.9	-0.0	13.76	4.7	124.9	-0.0
			2	0.00	1.9	50.0	-0.0	13.76	1.9	50.0	-0.0
			6	0.00	9.1	239.8	0.0	13.76	9.1	239.8	0.0
			4	0.00	4.7	124.9	0.0	13.76	4.7	124.9	0.0
			2	0.00	1.9	50.0	0.0	13.76	1.9	50.0	0.0
35	82	3.25	5	0.00	0.0	-174.6	0.0	3.25	0.0	-174.6	0.0
			2	0.00	27.5	0.0	0.0	3.25	27.5	0.0	0.0
			5	0.00	0.0	-174.6	0.0	3.25	0.0	-174.6	0.0
			2	0.00	27.5	0.0	0.0	3.25	27.5	0.0	0.0
			1	0.00	74.2	0.0	-33.9	3.25	74.2	0.0	-33.9
25	26	11.00	1	0.00	0.0	155.3	0.0	11.00	0.0	155.3	0.0
82	103	1.00	1	0.00	81.5	0.0	0.0	1.00	81.5	0.0	0.0
26	27	10.00	1	0.00	0.0	155.3	0.0	10.00	0.0	155.3	0.0
103	125	1.00	1	0.00	81.5	0.0	0.0	1.00	81.5	0.0	0.0
28	29	11.00	1	0.00	0.0	155.3	0.0	11.00	0.0	155.3	0.0
125	146	1.00	1	0.00	81.5	0.0	0.0	1.00	81.5	0.0	0.0
29	30	10.00	1	0.00	0.0	155.3	0.0	10.00	0.0	155.3	0.0
146	154	1.00	1	0.00	81.5	0.0	0.0	1.00	81.5	0.0	0.0
154	185	5.74	5	2.40	0.0	-174.6	0.0	5.74	0.0	-174.6	0.0
			2	2.40	27.5	0.0	0.0	5.74	27.5	0.0	0.0
			5	0.00	0.0	-174.6	0.0	2.40	0.0	-174.6	0.0
			2	0.00	27.5	0.0	0.0	2.40	27.5	0.0	0.0
			5	0.00	0.0	-174.6	0.0	5.74	0.0	-174.6	0.0
			2	0.00	27.5	0.0	0.0	5.74	27.5	0.0	0.0
			1	0.00	81.5	0.0	0.0	5.74	81.5	0.0	0.0
3	36	8.95	5	0.00	0.0	-174.6	0.0	8.95	0.0	-174.6	0.0
			2	0.00	27.5	0.0	0.0	8.95	27.5	0.0	0.0
			5	0.00	0.0	-174.8	0.0	8.95	0.0	-174.8	0.0

			2	0.00	27.5	0.0	0.0	8.95	27.5	0.0	0.0
36	83	3.25	5	0.00	0.0	-174.8	0.0	3.25	0.0	-174.8	0.0
			2	0.00	27.5	0.0	0.0	3.25	27.5	0.0	0.0
			5	0.00	0.0	-174.6	0.0	3.25	0.0	-174.6	0.0
			2	0.00	27.5	0.0	0.0	3.25	27.5	0.0	0.0
			1	0.00	74.2	0.0	-33.9	3.25	74.2	0.0	-33.9
83	104	1.00	1	0.00	81.5	0.0	0.0	1.00	81.5	0.0	0.0
104	126	1.00	1	0.00	81.5	0.0	0.0	1.00	81.5	0.0	0.0
126	147	1.00	1	0.00	81.5	0.0	0.0	1.00	81.5	0.0	0.0
147	155	1.00	1	0.00	81.5	0.0	0.0	1.00	81.5	0.0	0.0
155	186	5.74	5	0.00	0.0	-174.6	0.0	5.74	0.0	-174.6	0.0
			2	0.00	27.5	0.0	0.0	5.74	27.5	0.0	0.0
			5	0.00	0.0	-174.8	0.0	5.74	0.0	-174.8	0.0
			2	0.00	27.5	0.0	0.0	5.74	27.5	0.0	0.0
			1	0.00	81.5	0.0	0.0	5.74	81.5	0.0	0.0
4	37	8.95	5	0.00	0.0	-174.4	0.0	6.70	0.0	-174.4	0.0
			2	0.00	27.5	0.0	0.0	6.70	27.5	0.0	0.0
			5	6.70	0.0	-174.4	0.0	8.95	0.0	-174.4	0.0
			2	6.70	27.5	0.0	0.0	8.95	27.5	0.0	0.0
			5	0.00	0.0	-174.8	0.0	8.95	0.0	-174.8	0.0
			2	0.00	27.5	0.0	0.0	8.95	27.5	0.0	0.0
			1	0.00	81.5	0.0	0.0	8.95	81.5	0.0	0.0
37	84	3.25	5	0.00	0.0	-174.8	0.0	3.25	0.0	-174.8	0.0
			2	0.00	27.5	0.0	0.0	3.25	27.5	0.0	0.0
			5	0.00	0.0	-174.4	0.0	3.25	0.0	-174.4	0.0
			2	0.00	27.5	0.0	0.0	3.25	27.5	0.0	0.0
			1	0.00	81.5	0.0	0.0	3.25	81.5	0.0	0.0
84	105	1.00	1	0.00	81.5	0.0	0.0	1.00	81.5	0.0	0.0
105	127	1.00	1	0.00	81.5	0.0	0.0	1.00	81.5	0.0	0.0
127	148	1.00	1	0.00	81.5	0.0	0.0	1.00	81.5	0.0	0.0
52	53	2.50	5	0.00	0.0	0.0	73.0	2.50	0.0	0.0	73.0
			2	0.00	0.0	11.5	0.0	2.50	0.0	11.5	0.0
148	156	1.00	1	0.00	81.5	0.0	0.0	1.00	81.5	0.0	0.0
156	187	5.74	5	0.00	0.0	-174.8	0.0	5.74	0.0	-174.8	0.0
			2	0.00	27.5	0.0	0.0	5.74	27.5	0.0	0.0
			5	0.00	0.0	-174.4	0.0	5.74	0.0	-174.4	0.0
			2	0.00	27.5	0.0	0.0	5.74	27.5	0.0	0.0
			1	0.00	81.5	0.0	0.0	5.74	81.5	0.0	0.0
5	23	6.70	5	0.00	0.0	-174.4	0.0	6.70	0.0	-174.4	0.0
			2	0.00	27.5	0.0	0.0	6.70	27.5	0.0	0.0
			1	0.00	2000.0	0.0	0.0	6.70	2000.0	0.0	0.0
55	56	2.50	5	0.00	0.0	0.0	73.0	2.50	0.0	0.0	73.0
			2	0.00	0.0	11.5	0.0	2.50	0.0	11.5	0.0
23	38	2.25	5	0.00	0.0	-174.4	0.0	2.25	0.0	-174.4	0.0
			2	0.00	27.5	0.0	0.0	2.25	27.5	0.0	0.0
			1	0.00	2000.0	0.0	0.0	2.25	2000.0	0.0	0.0
38	52	3.10	1	0.00	2000.0	0.0	0.0	3.10	2000.0	0.0	0.0
52	73	0.15	1	0.00	2000.0	0.0	0.0	0.15	2000.0	0.0	0.0
73	90	1.00	1	0.00	2000.0	0.0	0.0	1.00	2000.0	0.0	0.0
90	112	1.00	1	0.00	2000.0	0.0	0.0	1.00	2000.0	0.0	0.0

112	133	1.00	1	0.00	2000.0	0.0	0.0	1.00	2000.0	0.0	0.0
65	66	2.50	5	0.00	0.0	-0.0	5.8	2.50	0.0	-0.0	5.8
			2	0.00	0.0	1.5	-0.0	2.50	0.0	1.5	-0.0
133	157	1.00	1	0.00	2000.0	0.0	0.0	1.00	2000.0	0.0	0.0
66	67	2.50	5	0.00	0.0	-0.0	5.8	2.50	0.0	-0.0	5.8
			2	0.00	0.0	1.5	-0.0	2.50	0.0	1.5	-0.0
157	168	2.40	5	0.00	0.0	-159.0	0.0	2.40	0.0	-159.0	0.0
			2	0.00	25.0	0.0	0.0	2.40	25.0	0.0	0.0
			1	0.00	2000.0	0.0	0.0	2.40	2000.0	0.0	0.0
67	68	2.49	5	0.00	0.0	0.0	5.8	2.49	0.0	0.0	5.8
			2	0.00	0.0	1.5	0.0	2.49	0.0	1.5	0.0
168	188	3.34	5	0.00	0.0	-159.0	0.0	3.34	0.0	-159.0	0.0
			2	0.00	25.0	0.0	0.0	3.34	25.0	0.0	0.0
			1	0.00	2000.0	0.0	0.0	3.34	2000.0	0.0	0.0
68	69	2.50	5	0.00	0.0	0.0	5.8	2.50	0.0	0.0	5.8
			2	0.00	0.0	1.5	-0.0	2.50	0.0	1.5	-0.0
6	24	6.70	1	0.00	2000.0	0.0	0.0	6.70	2000.0	0.0	0.0
69	70	2.50	5	0.00	0.0	0.0	5.8	2.50	0.0	0.0	5.8
			2	0.00	0.0	1.5	0.0	2.50	0.0	1.5	0.0
24	56	5.35	1	0.00	2000.0	0.0	0.0	5.35	2000.0	0.0	0.0
70	71	2.50	5	0.00	0.0	0.0	5.8	2.50	0.0	0.0	5.8
			2	0.00	0.0	1.5	0.0	2.50	0.0	1.5	0.0
56	94	1.15	1	0.00	2000.0	0.0	0.0	1.15	2000.0	0.0	0.0
72	82	2.75	5	0.00	0.0	63.5	-0.0	2.75	0.0	63.5	-0.0
			2	0.00	0.0	-0.0	-10.0	2.75	0.0	-0.0	-10.0
			1	0.00	0.0	-0.0	-12.0	2.75	0.0	-0.0	-12.0
94	116	1.00	1	0.00	2000.0	0.0	0.0	1.00	2000.0	0.0	0.0
82	83	2.75	5	0.00	0.0	63.5	0.0	2.75	0.0	63.5	0.0
			2	0.00	0.0	0.0	-10.0	2.75	0.0	0.0	-10.0
116	137	1.00	1	0.00	2000.0	0.0	0.0	1.00	2000.0	0.0	0.0
83	84	2.75	5	0.00	0.0	63.5	0.0	2.75	0.0	63.5	0.0
			2	0.00	0.0	0.0	-10.0	2.75	0.0	0.0	-10.0
137	161	1.00	1	0.00	2000.0	0.0	0.0	1.00	2000.0	0.0	0.0
84	73	2.75	5	0.00	0.0	63.5	-0.0	2.75	0.0	63.5	-0.0
			2	0.00	-0.0	-0.0	-10.0	2.75	-0.0	-0.0	-10.0
			1	0.00	-0.0	-0.0	-12.0	2.75	-0.0	-0.0	-12.0
161	169	2.40	5	0.00	0.0	-159.0	0.0	2.40	0.0	-159.0	0.0
			2	0.00	25.0	0.0	0.0	2.40	25.0	0.0	0.0
			1	0.00	2000.0	0.0	0.0	2.40	2000.0	0.0	0.0
75	76	2.50	5	0.00	0.0	-0.0	5.8	2.50	0.0	-0.0	5.8
			2	0.00	0.0	1.5	0.0	2.50	0.0	1.5	0.0
			5	0.00	0.0	0.0	38.5	2.50	0.0	0.0	38.5
			2	0.00	0.0	10.0	-0.0	2.50	0.0	10.0	-0.0
			1	0.00	0.0	12.0	0.0	2.50	0.0	12.0	0.0
169	192	3.34	5	0.00	0.0	-159.0	0.0	3.34	0.0	-159.0	0.0
			2	0.00	25.0	0.0	0.0	3.34	25.0	0.0	0.0
			1	0.00	2000.0	0.0	0.0	3.34	2000.0	0.0	0.0
76	77	2.50	5	0.00	0.0	-0.0	5.8	2.50	0.0	-0.0	5.8
			2	0.00	0.0	1.5	-0.0	2.50	0.0	1.5	-0.0
			5	0.00	0.0	-0.0	38.5	2.50	0.0	-0.0	38.5

			2	0.00	0.0	10.0	0.0	2.50	0.0	10.0	0.0
7	39	8.95	7	0.00	0.0	0.0	-147.5	8.95	0.0	0.0	-147.5
			2	0.00	29.5	0.0	0.0	8.95	29.5	0.0	0.0
			7	0.00	0.0	0.0	-147.5	8.95	0.0	0.0	-147.5
			2	0.00	29.5	0.0	0.0	8.95	29.5	0.0	0.0
77	78	2.49	5	0.00	0.0	0.0	5.8	2.49	0.0	0.0	5.8
			2	0.00	0.0	1.5	0.0	2.49	0.0	1.5	0.0
			5	0.00	0.0	0.0	38.5	2.49	0.0	0.0	38.5
			2	0.00	0.0	10.0	0.0	2.49	0.0	10.0	0.0
39	85	3.25	7	0.00	0.0	0.0	-147.5	3.25	0.0	0.0	-147.5
			2	0.00	29.5	0.0	0.0	3.25	29.5	0.0	0.0
			7	0.00	0.0	0.0	-147.5	3.25	0.0	0.0	-147.5
			2	0.00	29.5	0.0	0.0	3.25	29.5	0.0	0.0
78	79	2.50	5	0.00	0.0	-0.0	5.8	2.50	0.0	-0.0	5.8
			2	0.00	0.0	1.5	-0.0	2.50	0.0	1.5	-0.0
			5	0.00	0.0	0.0	38.5	2.50	0.0	0.0	38.5
			2	0.00	0.0	10.0	-0.0	2.50	0.0	10.0	-0.0
			1	0.00	0.0	12.0	0.0	2.50	0.0	12.0	0.0
79	80	2.50	5	0.00	0.0	0.0	5.8	2.50	0.0	0.0	5.8
			2	0.00	0.0	1.5	0.0	2.50	0.0	1.5	0.0
			5	0.00	0.0	0.0	38.5	2.50	0.0	0.0	38.5
			2	0.00	0.0	10.0	0.0	2.50	0.0	10.0	0.0
			1	0.00	0.0	12.0	0.0	2.50	0.0	12.0	0.0
80	81	2.50	5	0.00	0.0	0.0	5.8	2.50	0.0	0.0	5.8
			2	0.00	0.0	1.5	0.0	2.50	0.0	1.5	0.0
			5	0.00	0.0	0.0	38.5	2.50	0.0	0.0	38.5
			2	0.00	0.0	10.0	0.0	2.50	0.0	10.0	0.0
			1	0.00	0.0	12.0	0.0	2.50	0.0	12.0	0.0
89	103	2.75	5	0.00	0.0	63.5	-0.0	2.75	0.0	63.5	-0.0
			2	0.00	0.0	-0.0	-10.0	2.75	0.0	-0.0	-10.0
			5	0.00	0.0	63.5	-0.0	2.75	0.0	63.5	-0.0
			2	0.00	0.0	-0.0	-10.0	2.75	0.0	-0.0	-10.0
			1	0.00	0.0	-0.0	-12.0	2.75	0.0	-0.0	-12.0
103	104	2.75	5	0.00	0.0	63.5	0.0	2.75	0.0	63.5	0.0
			2	0.00	0.0	0.0	-10.0	2.75	0.0	0.0	-10.0
			5	0.00	0.0	63.5	0.0	2.75	0.0	63.5	0.0
			2	0.00	0.0	0.0	-10.0	2.75	0.0	0.0	-10.0
162	195	5.74	7	0.00	0.0	0.0	-147.5	5.74	0.0	0.0	-147.5
			2	0.00	29.5	-0.0	0.0	5.74	29.5	-0.0	0.0
			7	0.00	0.0	0.0	-147.5	5.74	0.0	0.0	-147.5
			2	0.00	29.5	-0.0	0.0	5.74	29.5	-0.0	0.0
104	105	2.75	5	0.00	0.0	63.5	0.0	2.75	0.0	63.5	0.0
			2	0.00	0.0	0.0	-10.0	2.75	0.0	0.0	-10.0
			5	0.00	0.0	63.5	0.0	2.75	0.0	63.5	0.0
			2	0.00	0.0	0.0	-10.0	2.75	0.0	0.0	-10.0
11	58	12.05	1	0.00	2000.0	-0.0	0.0	12.05	2000.0	-0.0	0.0
105	90	2.75	5	0.00	0.0	63.5	-0.0	2.75	0.0	63.5	-0.0
			2	0.00	-0.0	-0.0	-10.0	2.75	-0.0	-0.0	-10.0
			5	0.00	0.0	63.5	-0.0	2.75	0.0	63.5	-0.0
			2	0.00	-0.0	-0.0	-10.0	2.75	-0.0	-0.0	-10.0

			1	0.00	-0.0	-0.0	-12.0	2.75	-0.0	-0.0	-12.0
12	40	8.95	7	0.00	0.0	0.0	-147.5	8.95	0.0	0.0	-147.5
			2	0.00	29.5	0.0	0.0	8.95	29.5	0.0	0.0
			7	0.00	0.0	0.0	-147.5	8.95	0.0	0.0	-147.5
			2	0.00	29.5	0.0	0.0	8.95	29.5	0.0	0.0
90	91	2.50	5	0.00	0.0	73.0	0.0	2.50	0.0	73.0	0.0
			2	0.00	0.0	0.0	-11.5	2.50	0.0	0.0	-11.5
			5	0.00	0.0	63.5	0.0	2.50	0.0	63.5	0.0
			2	0.00	0.0	0.0	-10.0	2.50	0.0	0.0	-10.0
			1	0.00	0.0	0.0	-12.0	2.50	0.0	0.0	-12.0
40	86	3.25	7	0.00	0.0	0.0	-147.5	3.25	0.0	0.0	-147.5
			2	0.00	29.5	0.0	0.0	3.25	29.5	0.0	0.0
			7	0.00	0.0	0.0	-147.5	3.25	0.0	0.0	-147.5
			2	0.00	29.5	0.0	0.0	3.25	29.5	0.0	0.0
92	91	2.50	5	0.00	0.0	-63.5	0.0	2.50	0.0	-63.5	0.0
			2	0.00	0.0	0.0	-10.0	2.50	0.0	0.0	-10.0
93	92	2.49	5	0.00	0.0	-63.5	0.0	2.49	0.0	-63.5	0.0
			2	0.00	0.0	0.0	-10.0	2.49	0.0	0.0	-10.0
93	94	2.50	5	0.00	0.0	73.0	0.0	2.50	0.0	73.0	0.0
			2	0.00	0.0	0.0	-11.5	2.50	0.0	0.0	-11.5
			5	0.00	0.0	63.5	0.0	2.50	0.0	63.5	0.0
			2	0.00	0.0	0.0	-10.0	2.50	0.0	0.0	-10.0
			1	0.00	0.0	0.0	-12.0	2.50	0.0	0.0	-12.0
96	97	2.50	5	0.00	0.0	0.0	38.5	2.50	0.0	0.0	38.5
			2	0.00	0.0	10.0	-0.0	2.50	0.0	10.0	-0.0
			5	0.00	0.0	0.0	38.5	2.50	0.0	0.0	38.5
			2	0.00	0.0	10.0	-0.0	2.50	0.0	10.0	-0.0
			1	0.00	0.0	12.0	0.0	2.50	0.0	12.0	0.0
97	98	2.50	5	0.00	0.0	0.0	38.5	2.50	0.0	0.0	38.5
			2	0.00	0.0	10.0	-0.0	2.50	0.0	10.0	-0.0
			5	0.00	0.0	-0.0	38.5	2.50	0.0	-0.0	38.5
			2	0.00	0.0	10.0	0.0	2.50	0.0	10.0	0.0
163	196	5.74	7	0.00	0.0	0.0	-147.5	5.74	0.0	0.0	-147.5
			2	0.00	29.5	-0.0	0.0	5.74	29.5	-0.0	0.0
			7	0.00	0.0	0.0	-147.5	5.74	0.0	0.0	-147.5
			2	0.00	29.5	-0.0	0.0	5.74	29.5	-0.0	0.0
98	99	2.49	5	0.00	0.0	0.0	38.5	2.49	0.0	0.0	38.5
			2	0.00	0.0	10.0	0.0	2.49	0.0	10.0	0.0
			5	0.00	0.0	0.0	38.5	2.49	0.0	0.0	38.5
			2	0.00	0.0	10.0	0.0	2.49	0.0	10.0	0.0
13	31	6.70	7	0.00	0.0	0.0	-122.5	6.70	0.0	0.0	-122.5
			2	0.00	24.5	0.0	0.0	6.70	24.5	0.0	0.0
99	100	2.50	5	0.00	0.0	0.0	38.5	2.50	0.0	0.0	38.5
			2	0.00	0.0	10.0	-0.0	2.50	0.0	10.0	-0.0
			5	0.00	0.0	0.0	38.5	2.50	0.0	0.0	38.5
			2	0.00	0.0	10.0	-0.0	2.50	0.0	10.0	-0.0
			1	0.00	0.0	12.0	0.0	2.50	0.0	12.0	0.0
31	41	2.25	7	0.00	0.0	0.0	-122.5	2.25	0.0	0.0	-122.5
			2	0.00	24.5	0.0	0.0	2.25	24.5	0.0	0.0
100	101	2.50	5	0.00	0.0	0.0	38.5	2.50	0.0	0.0	38.5

			2	0.00	0.0	10.0	0.0	2.50	0.0	10.0	0.0
			5	0.00	0.0	0.0	38.5	2.50	0.0	0.0	38.5
			2	0.00	0.0	10.0	0.0	2.50	0.0	10.0	0.0
			1	0.00	0.0	12.0	0.0	2.50	0.0	12.0	0.0
41	87	3.25	7	0.00	0.0	0.0	-122.5	3.25	0.0	0.0	-122.5
			2	0.00	24.5	0.0	0.0	3.25	24.5	0.0	0.0
			7	0.00	0.0	0.0	-147.5	3.25	0.0	0.0	-147.5
			2	0.00	29.5	0.0	0.0	3.25	29.5	0.0	0.0
101	102	2.50	5	0.00	0.0	0.0	38.5	2.50	0.0	0.0	38.5
			2	0.00	0.0	10.0	0.0	2.50	0.0	10.0	0.0
			5	0.00	0.0	0.0	38.5	2.50	0.0	0.0	38.5
			2	0.00	0.0	10.0	0.0	2.50	0.0	10.0	0.0
			1	0.00	0.0	12.0	0.0	2.50	0.0	12.0	0.0
111	125	2.75	5	0.00	0.0	63.5	-0.0	2.75	0.0	63.5	-0.0
			2	0.00	0.0	-0.0	-10.0	2.75	0.0	-0.0	-10.0
			5	0.00	0.0	63.5	-0.0	2.75	0.0	63.5	-0.0
			2	0.00	0.0	-0.0	-10.0	2.75	0.0	-0.0	-10.0
			1	0.00	0.0	-0.0	-12.0	2.75	0.0	-0.0	-12.0
125	126	2.75	5	0.00	0.0	63.5	0.0	2.75	0.0	63.5	0.0
			2	0.00	0.0	0.0	-10.0	2.75	0.0	0.0	-10.0
			5	0.00	0.0	63.5	0.0	2.75	0.0	63.5	0.0
			2	0.00	0.0	0.0	-10.0	2.75	0.0	0.0	-10.0
126	127	2.75	5	0.00	0.0	63.5	0.0	2.75	0.0	63.5	0.0
			2	0.00	0.0	0.0	-10.0	2.75	0.0	0.0	-10.0
			5	0.00	0.0	63.5	0.0	2.75	0.0	63.5	0.0
			2	0.00	0.0	0.0	-10.0	2.75	0.0	0.0	-10.0
127	112	2.75	5	0.00	0.0	63.5	-0.0	2.75	0.0	63.5	-0.0
			2	0.00	-0.0	-0.0	-10.0	2.75	-0.0	-0.0	-10.0
			5	0.00	0.0	63.5	-0.0	2.75	0.0	63.5	-0.0
			2	0.00	-0.0	-0.0	-10.0	2.75	-0.0	-0.0	-10.0
			1	0.00	-0.0	-0.0	-12.0	2.75	-0.0	-0.0	-12.0
164	197	5.74	7	0.00	0.0	0.0	-122.5	5.74	0.0	0.0	-122.5
			2	0.00	24.5	-0.0	0.0	5.74	24.5	-0.0	0.0
			7	0.00	0.0	0.0	-147.5	5.74	0.0	0.0	-147.5
			2	0.00	29.5	-0.0	0.0	5.74	29.5	-0.0	0.0
112	113	2.50	5	0.00	0.0	63.5	0.0	2.50	0.0	63.5	0.0
			2	0.00	0.0	0.0	-10.0	2.50	0.0	0.0	-10.0
			5	0.00	0.0	63.5	0.0	2.50	0.0	63.5	0.0
			2	0.00	0.0	0.0	-10.0	2.50	0.0	0.0	-10.0
			1	0.00	0.0	0.0	-12.0	2.50	0.0	0.0	-12.0
114	113	2.50	5	0.00	0.0	-63.5	0.0	2.50	0.0	-63.5	0.0
			2	0.00	0.0	0.0	-10.0	2.50	0.0	0.0	-10.0
			5	0.00	0.0	-63.5	0.0	2.50	0.0	-63.5	0.0
			2	0.00	0.0	0.0	-10.0	2.50	0.0	0.0	-10.0
14	32	6.70	1	0.00	2000.0	0.0	0.0	6.70	2000.0	0.0	0.0
115	114	2.49	5	0.00	0.0	-63.5	0.0	2.49	0.0	-63.5	0.0
			2	0.00	0.0	0.0	-10.0	2.49	0.0	0.0	-10.0
			5	0.00	0.0	-63.5	0.0	2.49	0.0	-63.5	0.0
			2	0.00	0.0	0.0	-10.0	2.49	0.0	0.0	-10.0
32	45	2.25	1	0.00	2000.0	0.0	0.0	2.25	2000.0	0.0	0.0

115	116	2.50	5	0.00	0.0	63.5	0.0	2.50	0.0	63.5	0.0
			2	0.00	0.0	0.0	-10.0	2.50	0.0	0.0	-10.0
			5	0.00	0.0	63.5	0.0	2.50	0.0	63.5	0.0
			2	0.00	0.0	0.0	-10.0	2.50	0.0	0.0	-10.0
			1	0.00	0.0	0.0	-12.0	2.50	0.0	0.0	-12.0
45	59	3.10	1	0.00	2000.0	0.0	0.0	3.10	2000.0	0.0	0.0
118	119	2.50	5	0.00	0.0	-0.0	38.5	2.50	0.0	-0.0	38.5
			2	0.00	0.0	10.0	0.0	2.50	0.0	10.0	0.0
			5	0.00	0.0	0.0	38.5	2.50	0.0	0.0	38.5
			2	0.00	0.0	10.0	-0.0	2.50	0.0	10.0	-0.0
			1	0.00	0.0	12.0	0.0	2.50	0.0	12.0	0.0
15	33	6.70	1	0.00	2000.0	0.0	0.0	6.70	2000.0	0.0	0.0
119	120	2.50	5	0.00	0.0	-0.0	38.5	2.50	0.0	-0.0	38.5
			2	0.00	0.0	10.0	-0.0	2.50	0.0	10.0	-0.0
			5	0.00	0.0	0.0	38.5	2.50	0.0	0.0	38.5
			2	0.00	0.0	10.0	-0.0	2.50	0.0	10.0	-0.0
33	63	5.35	1	0.00	2000.0	0.0	0.0	5.35	2000.0	0.0	0.0
120	121	2.49	5	0.00	0.0	0.0	38.5	2.49	0.0	0.0	38.5
			2	0.00	0.0	10.0	0.0	2.49	0.0	10.0	0.0
			5	0.00	0.0	0.0	38.5	2.49	0.0	0.0	38.5
			2	0.00	0.0	10.0	0.0	2.49	0.0	10.0	0.0
17	46	8.95	7	6.70	0.0	0.0	-122.5	8.95	0.0	0.0	-122.5
			2	6.70	24.5	0.0	0.0	8.95	24.5	0.0	0.0
			7	0.00	0.0	0.0	-122.5	6.70	0.0	0.0	-122.5
			2	0.00	24.5	0.0	0.0	6.70	24.5	0.0	0.0
			7	0.00	0.0	0.0	-122.5	8.95	0.0	0.0	-122.5
			2	0.00	24.5	0.0	0.0	8.95	24.5	0.0	0.0
121	122	2.50	5	0.00	0.0	0.0	38.5	2.50	0.0	0.0	38.5
			2	0.00	0.0	10.0	-0.0	2.50	0.0	10.0	-0.0
			5	0.00	0.0	0.0	38.5	2.50	0.0	0.0	38.5
			2	0.00	0.0	10.0	-0.0	2.50	0.0	10.0	-0.0
			1	0.00	0.0	12.0	0.0	2.50	0.0	12.0	0.0
46	88	3.25	7	0.00	0.0	0.0	-122.5	3.25	0.0	0.0	-122.5
			2	0.00	24.5	0.0	0.0	3.25	24.5	0.0	0.0
			7	0.00	0.0	0.0	-122.5	3.25	0.0	0.0	-122.5
			2	0.00	24.5	0.0	0.0	3.25	24.5	0.0	0.0
122	123	2.50	5	0.00	0.0	0.0	38.5	2.50	0.0	0.0	38.5
			2	0.00	0.0	10.0	0.0	2.50	0.0	10.0	0.0
			5	0.00	0.0	0.0	38.5	2.50	0.0	0.0	38.5
			2	0.00	0.0	10.0	0.0	2.50	0.0	10.0	0.0
			1	0.00	0.0	12.0	0.0	2.50	0.0	12.0	0.0
123	124	2.50	5	0.00	0.0	0.0	38.5	2.50	0.0	0.0	38.5
			2	0.00	0.0	10.0	0.0	2.50	0.0	10.0	0.0
			5	0.00	0.0	0.0	38.5	2.50	0.0	0.0	38.5
			2	0.00	0.0	10.0	0.0	2.50	0.0	10.0	0.0
			1	0.00	0.0	12.0	0.0	2.50	0.0	12.0	0.0
132	146	2.75	5	0.00	0.0	63.5	-0.0	2.75	0.0	63.5	-0.0
			2	0.00	0.0	-0.0	-10.0	2.75	0.0	-0.0	-10.0
			5	0.00	0.0	63.5	-0.0	2.75	0.0	63.5	-0.0
			2	0.00	0.0	-0.0	-10.0	2.75	0.0	-0.0	-10.0

			1	0.00	0.0	-0.0	-12.0	2.75	0.0	-0.0	-12.0
146	147	2.75	5	0.00	0.0	63.5	0.0	2.75	0.0	63.5	0.0
			2	0.00	0.0	0.0	-10.0	2.75	0.0	0.0	-10.0
			5	0.00	0.0	63.5	0.0	2.75	0.0	63.5	0.0
			2	0.00	0.0	0.0	-10.0	2.75	0.0	0.0	-10.0
147	148	2.75	5	0.00	0.0	63.5	0.0	2.75	0.0	63.5	0.0
			2	0.00	0.0	0.0	-10.0	2.75	0.0	0.0	-10.0
			5	0.00	0.0	63.5	0.0	2.75	0.0	63.5	0.0
			2	0.00	0.0	0.0	-10.0	2.75	0.0	0.0	-10.0
165	198	5.74	7	0.00	0.0	0.0	-122.5	5.74	0.0	0.0	-122.5
			2	0.00	24.5	0.0	0.0	5.74	24.5	0.0	0.0
			7	0.00	0.0	0.0	-122.5	5.74	0.0	0.0	-122.5
			2	0.00	24.5	0.0	0.0	5.74	24.5	0.0	0.0
148	133	2.75	5	0.00	0.0	63.5	-0.0	2.75	0.0	63.5	-0.0
			2	0.00	-0.0	-0.0	-10.0	2.75	-0.0	-0.0	-10.0
			5	0.00	0.0	63.5	-0.0	2.75	0.0	63.5	-0.0
			2	0.00	-0.0	-0.0	-10.0	2.75	-0.0	-0.0	-10.0
			1	0.00	-0.0	-0.0	-12.0	2.75	-0.0	-0.0	-12.0
18	47	8.95	7	0.00	0.0	0.0	-122.5	8.95	0.0	0.0	-122.5
			2	0.00	24.5	0.0	0.0	8.95	24.5	0.0	0.0
133	134	2.50	5	0.00	0.0	63.5	0.0	2.50	0.0	63.5	0.0
			2	0.00	0.0	0.0	-10.0	2.50	0.0	0.0	-10.0
			5	0.00	0.0	63.5	0.0	2.50	0.0	63.5	0.0
			2	0.00	0.0	0.0	-10.0	2.50	0.0	0.0	-10.0
			1	0.00	0.0	0.0	-12.0	2.50	0.0	0.0	-12.0
47	74	3.25	7	0.00	0.0	0.0	-122.5	3.25	0.0	0.0	-122.5
			2	0.00	24.5	0.0	0.0	3.25	24.5	0.0	0.0
135	134	2.50	5	0.00	0.0	-63.5	0.0	2.50	0.0	-63.5	0.0
			2	0.00	0.0	0.0	-10.0	2.50	0.0	0.0	-10.0
			5	0.00	0.0	-63.5	0.0	2.50	0.0	-63.5	0.0
			2	0.00	0.0	0.0	-10.0	2.50	0.0	0.0	-10.0
136	135	2.49	5	0.00	0.0	-63.5	0.0	2.49	0.0	-63.5	0.0
			2	0.00	0.0	0.0	-10.0	2.49	0.0	0.0	-10.0
			5	0.00	0.0	-63.5	0.0	2.49	0.0	-63.5	0.0
			2	0.00	0.0	0.0	-10.0	2.49	0.0	0.0	-10.0
136	137	2.50	5	0.00	0.0	63.5	0.0	2.50	0.0	63.5	0.0
			2	0.00	0.0	0.0	-10.0	2.50	0.0	0.0	-10.0
			5	0.00	0.0	63.5	0.0	2.50	0.0	63.5	0.0
			2	0.00	0.0	0.0	-10.0	2.50	0.0	0.0	-10.0
			1	0.00	0.0	0.0	-12.0	2.50	0.0	0.0	-12.0
139	140	2.50	5	0.00	0.0	0.0	38.5	2.50	0.0	0.0	38.5
			2	0.00	0.0	10.0	-0.0	2.50	0.0	10.0	-0.0
			1	0.00	0.0	12.0	0.0	2.50	0.0	12.0	0.0
140	141	2.50	5	0.00	0.0	0.0	38.5	2.50	0.0	0.0	38.5
			2	0.00	0.0	10.0	-0.0	2.50	0.0	10.0	-0.0
141	142	2.49	5	0.00	0.0	0.0	38.5	2.49	0.0	0.0	38.5
			2	0.00	0.0	10.0	0.0	2.49	0.0	10.0	0.0
142	143	2.50	5	0.00	0.0	0.0	38.5	2.50	0.0	0.0	38.5
			2	0.00	0.0	10.0	-0.0	2.50	0.0	10.0	-0.0
			1	0.00	0.0	12.0	0.0	2.50	0.0	12.0	0.0

143	144	2.50	5	0.00	0.0	0.0	38.5	2.50	0.0	0.0	38.5
			2	0.00	0.0	10.0	0.0	2.50	0.0	10.0	0.0
			1	0.00	0.0	12.0	0.0	2.50	0.0	12.0	0.0
19	51	8.95	1	0.00	2000.0	0.0	0.0	8.95	2000.0	0.0	0.0
144	145	2.50	5	0.00	0.0	0.0	38.5	2.50	0.0	0.0	38.5
			2	0.00	0.0	10.0	0.0	2.50	0.0	10.0	0.0
			1	0.00	0.0	12.0	0.0	2.50	0.0	12.0	0.0
51	65	3.10	1	0.00	2000.0	0.0	0.0	3.10	2000.0	0.0	0.0
153	154	2.75	5	0.00	0.0	63.5	0.0	2.75	0.0	63.5	0.0
			2	0.00	-0.0	0.0	-10.0	2.75	0.0	0.0	-10.0
			1	0.00	0.0	0.0	-12.0	2.75	0.0	0.0	-12.0
65	75	0.15	1	0.00	2000.0	0.0	0.0	0.15	2000.0	0.0	0.0
154	155	2.75	5	0.00	0.0	63.5	0.0	2.75	0.0	63.5	0.0
			2	0.00	0.0	0.0	-10.0	2.75	0.0	0.0	-10.0
75	96	1.00	1	0.00	2000.0	0.0	0.0	1.00	2000.0	0.0	0.0
155	156	2.75	5	0.00	0.0	63.5	0.0	2.75	0.0	63.5	0.0
			2	0.00	0.0	0.0	-10.0	2.75	0.0	0.0	-10.0
96	118	1.00	1	0.00	2000.0	0.0	0.0	1.00	2000.0	0.0	0.0
156	157	2.75	5	0.00	0.0	63.5	0.0	2.75	0.0	63.5	0.0
			2	0.00	-0.0	0.0	-10.0	2.75	-0.0	0.0	-10.0
			1	0.00	0.0	0.0	-12.0	2.75	0.0	0.0	-12.0
118	139	1.00	1	0.00	2000.0	0.0	0.0	1.00	2000.0	0.0	0.0
157	158	2.50	5	0.00	0.0	63.5	0.0	2.50	0.0	63.5	0.0
			2	0.00	0.0	0.0	-10.0	2.50	0.0	0.0	-10.0
			1	0.00	0.0	0.0	-12.0	2.50	0.0	0.0	-12.0
139	181	3.40	5	0.00	0.0	-96.4	0.0	3.40	0.0	-96.4	0.0
			2	0.00	25.0	-0.0	0.0	3.40	25.0	-0.0	0.0
			1	0.00	2000.0	0.0	0.0	3.40	2000.0	0.0	0.0
159	158	2.50	5	0.00	0.0	-63.5	0.0	2.50	0.0	-63.5	0.0
			2	0.00	0.0	0.0	-10.0	2.50	0.0	0.0	-10.0
181	207	3.86	5	0.00	0.0	-96.4	0.0	3.86	0.0	-96.4	0.0
			2	0.00	25.0	-0.0	0.0	3.86	25.0	-0.0	0.0
			1	0.00	2000.0	0.0	0.0	3.86	2000.0	0.0	0.0
160	159	2.49	5	0.00	0.0	-63.5	0.0	2.49	0.0	-63.5	0.0
			2	0.00	0.0	0.0	-10.0	2.49	0.0	0.0	-10.0
20	69	12.05	1	0.00	2000.0	0.0	0.0	12.05	2000.0	0.0	0.0
160	161	2.50	5	0.00	0.0	63.5	0.0	2.50	0.0	63.5	0.0
			2	0.00	0.0	0.0	-10.0	2.50	0.0	0.0	-10.0
			1	0.00	0.0	0.0	-12.0	2.50	0.0	0.0	-12.0
69	79	0.15	1	0.00	2000.0	0.0	0.0	0.15	2000.0	0.0	0.0
171	172	11.00	1	0.00	0.0	199.6	0.0	11.00	0.0	199.6	0.0
79	100	1.00	1	0.00	2000.0	0.0	0.0	1.00	2000.0	0.0	0.0
172	173	10.00	1	0.00	0.0	199.6	0.0	10.00	0.0	199.6	0.0
100	122	1.00	1	0.00	2000.0	0.0	0.0	1.00	2000.0	0.0	0.0
173	174	3.00	1	0.00	0.0	199.6	0.0	3.00	0.0	199.6	0.0
122	143	1.00	1	0.00	2000.0	0.0	0.0	1.00	2000.0	0.0	0.0
174	175	2.00	1	0.00	0.0	199.6	0.0	2.00	0.0	199.6	0.0
143	182	3.40	5	0.00	0.0	-96.3	0.0	3.40	0.0	-96.3	0.0
			2	0.00	25.0	0.0	0.0	3.40	25.0	0.0	0.0
			5	0.00	0.0	-96.4	0.0	3.40	0.0	-96.4	0.0

			2	0.00	25.0	-0.0	0.0	3.40	25.0	-0.0	0.0
			1	0.00	2000.0	0.0	0.0	3.40	2000.0	0.0	0.0
176	177	11.00	1	0.00	0.0	199.6	0.0	11.00	0.0	199.6	0.0
182	211	3.86	5	0.00	0.0	-96.2	0.0	3.86	0.0	-96.2	0.0
			2	0.00	25.0	0.0	0.0	3.86	25.0	0.0	0.0
			5	0.00	0.0	-96.4	0.0	3.86	0.0	-96.4	0.0
			2	0.00	25.0	-0.0	0.0	3.86	25.0	-0.0	0.0
			1	0.00	2000.0	0.0	0.0	3.86	2000.0	0.0	0.0
177	178	10.00	1	0.00	0.0	199.6	0.0	10.00	0.0	199.6	0.0
21	71	12.05	1	0.00	2000.0	0.0	0.0	12.05	2000.0	0.0	0.0
178	179	5.00	1	0.00	0.0	199.6	0.0	5.00	0.0	199.6	0.0
71	81	0.15	1	0.00	2000.0	0.0	0.0	0.15	2000.0	0.0	0.0
184	185	2.75	6	0.00	-0.0	0.1	0.0	2.75	-0.0	0.0	0.0
			4	0.00	0.0	0.0	0.0	2.75	0.0	0.0	0.0
			2	0.00	-0.0	0.0	-0.0	2.75	-0.0	0.0	0.0
81	102	1.00	1	0.00	2000.0	0.0	0.0	1.00	2000.0	0.0	0.0
185	186	2.75	6	0.00	-0.0	0.0	-0.0	2.75	0.0	0.0	0.0
			4	0.00	-0.0	0.0	0.0	2.75	0.0	0.0	0.0
			2	0.00	-0.0	0.0	0.0	2.75	0.0	0.0	0.0
102	124	1.00	1	0.00	2000.0	0.0	0.0	1.00	2000.0	0.0	0.0
124	145	1.00	1	0.00	2000.0	0.0	0.0	1.00	2000.0	0.0	0.0
145	183	3.40	5	0.00	0.0	-96.3	0.0	3.40	0.0	-96.3	0.0
			2	0.00	25.0	0.0	0.0	3.40	25.0	0.0	0.0
			1	0.00	2000.0	0.0	0.0	3.40	2000.0	0.0	0.0
183	213	3.86	5	0.00	0.0	-96.3	0.0	3.86	0.0	-96.3	0.0
			2	0.00	25.0	0.0	0.0	3.86	25.0	0.0	0.0
			1	0.00	2000.0	0.0	0.0	3.86	2000.0	0.0	0.0
53	91	1.15	5	0.00	0.0	-158.8	0.0	1.15	0.0	-158.8	0.0
			2	0.00	25.0	0.0	0.0	1.15	25.0	0.0	0.0
			1	0.00	81.5	0.0	0.0	1.15	81.5	0.0	0.0
91	113	1.00	1	0.00	81.5	0.0	0.0	1.00	81.5	0.0	0.0
113	134	1.00	1	0.00	81.5	0.0	0.0	1.00	81.5	0.0	0.0
134	158	1.00	1	0.00	81.5	0.0	0.0	1.00	81.5	0.0	0.0
158	189	5.74	5	2.40	0.0	-159.0	0.0	5.74	0.0	-159.0	0.0
			2	2.40	25.0	0.0	0.0	5.74	25.0	0.0	0.0
			5	0.00	0.0	-159.0	0.0	2.40	0.0	-159.0	0.0
			2	0.00	25.0	0.0	0.0	2.40	25.0	0.0	0.0
			5	0.00	0.0	-158.8	0.0	5.74	0.0	-158.8	0.0
			2	0.00	25.0	0.0	0.0	5.74	25.0	0.0	0.0
			1	0.00	81.5	0.0	0.0	5.74	81.5	0.0	0.0
205	206	5.50	6	0.00	-0.0	0.0	0.0	5.50	-0.0	0.1	0.0
			4	0.00	-0.0	0.0	0.0	5.50	0.0	0.0	0.0
			2	0.00	-0.0	0.0	-0.0	5.50	-0.0	0.0	-0.0
54	92	1.15	5	0.00	0.0	-158.8	0.0	1.15	0.0	-158.8	0.0
			2	0.00	25.0	0.0	0.0	1.15	25.0	0.0	0.0
			5	0.00	0.0	-158.3	0.0	1.15	0.0	-158.3	0.0
			2	0.00	24.9	0.0	0.0	1.15	24.9	0.0	0.0
			1	0.00	81.5	0.0	0.0	1.15	81.5	0.0	0.0
92	114	1.00	1	0.00	81.5	0.0	0.0	1.00	81.5	0.0	0.0
114	135	1.00	1	0.00	81.5	0.0	0.0	1.00	81.5	0.0	0.0

135	159	1.00	1	0.00	81.5	0.0	0.0	1.00	81.5	0.0	0.0
159	190	5.74	5	0.00	0.0	-158.3	0.0	5.74	0.0	-158.3	0.0
			2	0.00	24.9	0.0	0.0	5.74	24.9	0.0	0.0
			5	0.00	0.0	-158.8	0.0	5.74	0.0	-158.8	0.0
			2	0.00	25.0	0.0	0.0	5.74	25.0	0.0	0.0
			1	0.00	81.5	0.0	0.0	5.74	81.5	0.0	0.0
55	93	1.15	5	0.00	0.0	-158.3	0.0	1.15	0.0	-158.3	0.0
			2	0.00	24.9	0.0	0.0	1.15	24.9	0.0	0.0
			1	0.00	81.5	0.0	0.0	1.15	81.5	0.0	0.0
93	115	1.00	1	0.00	81.5	0.0	0.0	1.00	81.5	0.0	0.0
115	136	1.00	1	0.00	81.5	0.0	0.0	1.00	81.5	0.0	0.0
22	25	0.50	1	0.00	0.0	375.0	0.0	0.50	0.0	375.0	0.0
136	160	1.00	1	0.00	81.5	0.0	0.0	1.00	81.5	0.0	0.0
28	31	0.50	1	0.00	0.0	375.0	0.0	0.50	0.0	375.0	0.0
160	191	5.74	5	0.00	0.0	-159.0	0.0	2.40	0.0	-159.0	0.0
			2	0.00	25.0	0.0	0.0	2.40	25.0	0.0	0.0
			5	2.40	0.0	-159.0	0.0	5.74	0.0	-159.0	0.0
			2	2.40	25.0	0.0	0.0	5.74	25.0	0.0	0.0
			5	0.00	0.0	-158.3	0.0	5.74	0.0	-158.3	0.0
			2	0.00	24.9	0.0	0.0	5.74	24.9	0.0	0.0
			1	0.00	81.5	0.0	0.0	5.74	81.5	0.0	0.0
23	26	0.50	1	0.00	0.0	375.0	0.0	0.50	0.0	375.0	0.0
66	76	0.15	1	0.00	81.5	0.0	0.0	0.15	81.5	0.0	0.0
32	29	0.50	1	0.00	0.0	375.0	0.0	0.50	0.0	375.0	0.0
76	97	1.00	1	0.00	81.5	0.0	0.0	1.00	81.5	0.0	0.0
24	27	0.50	1	0.00	0.0	375.0	0.0	0.50	0.0	375.0	0.0
97	119	1.00	1	0.00	81.5	0.0	0.0	1.00	81.5	0.0	0.0
30	33	0.50	1	0.00	0.0	375.0	0.0	0.50	0.0	375.0	0.0
119	140	1.00	1	0.00	81.5	0.0	0.0	1.00	81.5	0.0	0.0
140	208	7.26	5	3.40	-0.0	-96.4	0.0	7.26	-0.0	-96.4	0.0
			2	3.40	25.0	0.0	0.0	7.26	25.0	0.0	0.0
			5	0.00	-0.0	-96.4	0.0	3.40	-0.0	-96.4	0.0
			2	0.00	25.0	-0.0	0.0	3.40	25.0	-0.0	0.0
			5	0.00	-0.0	-96.3	0.0	7.26	-0.0	-96.3	0.0
			2	0.00	25.0	-0.0	0.0	7.26	25.0	-0.0	0.0
			1	0.00	81.5	0.0	0.0	7.26	81.5	0.0	0.0
67	77	0.15	1	0.00	81.5	0.0	0.0	0.15	81.5	0.0	0.0
77	98	1.00	1	0.00	81.5	0.0	0.0	1.00	81.5	0.0	0.0
98	120	1.00	1	0.00	81.5	0.0	0.0	1.00	81.5	0.0	0.0
120	141	1.00	1	0.00	81.5	0.0	0.0	1.00	81.5	0.0	0.0
141	209	7.26	5	0.00	0.0	-96.3	0.0	7.26	0.0	-96.3	0.0
			2	0.00	25.0	0.0	0.0	7.26	25.0	0.0	0.0
			5	0.00	0.0	-96.0	0.0	7.26	0.0	-96.0	0.0
			2	0.00	24.9	0.0	0.0	7.26	24.9	0.0	0.0
			1	0.00	81.5	0.0	0.0	7.26	81.5	0.0	0.0
68	78	0.15	1	0.00	81.5	0.0	0.0	0.15	81.5	0.0	0.0
78	99	1.00	1	0.00	81.5	0.0	0.0	1.00	81.5	0.0	0.0
99	121	1.00	1	0.00	81.5	0.0	0.0	1.00	81.5	0.0	0.0
121	142	1.00	1	0.00	81.5	0.0	0.0	1.00	81.5	0.0	0.0
142	210	7.26	5	0.00	0.0	-96.4	0.0	3.40	0.0	-96.4	0.0

			2	0.00	25.0	-0.0	0.0	3.40	25.0	-0.0	0.0
			5	3.40	0.0	-96.4	0.0	7.26	0.0	-96.4	0.0
			2	3.40	25.0	-0.0	0.0	7.26	25.0	-0.0	0.0
			5	0.00	0.0	-96.0	0.0	7.26	0.0	-96.0	0.0
			2	0.00	24.9	0.0	0.0	7.26	24.9	0.0	0.0
			1	0.00	81.5	0.0	0.0	7.26	81.5	0.0	0.0
38	45	8.85	4	0.00	0.0	1100.0	0.0	8.85	0.0	1100.0	0.0
			3	0.00	0.0	550.0	0.0	8.85	0.0	550.0	0.0
			2	0.00	0.0	2750.0	0.0	8.85	0.0	2750.0	0.0
70	80	0.15	1	0.00	81.5	0.0	0.0	0.15	81.5	0.0	0.0
45	51	4.90	4	0.00	0.0	1100.0	0.0	4.90	0.0	1100.0	0.0
			3	0.00	0.0	550.0	0.0	4.90	0.0	550.0	0.0
			2	0.00	0.0	2750.0	0.0	4.90	0.0	2750.0	0.0
80	101	1.00	1	0.00	81.5	0.0	0.0	1.00	81.5	0.0	0.0
52	59	8.85	4	0.00	0.0	1000.0	0.0	8.85	0.0	1000.0	0.0
			3	0.00	0.0	500.0	0.0	8.85	0.0	500.0	0.0
			2	0.00	0.0	2500.0	0.0	8.85	0.0	2500.0	0.0
101	123	1.00	1	0.00	81.5	0.0	0.0	1.00	81.5	0.0	0.0
123	144	1.00	1	0.00	81.5	0.0	0.0	1.00	81.5	0.0	0.0
144	212	7.26	5	3.40	0.0	-96.3	0.0	7.26	0.0	-96.3	0.0
			2	3.40	25.0	0.0	0.0	7.26	25.0	0.0	0.0
			5	0.00	0.0	-96.3	0.0	3.40	0.0	-96.3	0.0
			2	0.00	25.0	0.0	0.0	3.40	25.0	0.0	0.0
			5	0.00	0.0	-96.2	0.0	3.40	0.0	-96.2	0.0
			2	0.00	25.0	0.0	0.0	3.40	25.0	0.0	0.0
			5	3.40	0.0	-96.2	0.0	7.26	0.0	-96.2	0.0
			2	3.40	25.0	0.0	0.0	7.26	25.0	0.0	0.0
			1	0.00	81.5	0.0	0.0	7.26	81.5	0.0	0.0
110	170	5.00	1	0.00	61.4	0.0	0.0	5.00	61.4	0.0	0.0
170	193	3.34	1	0.00	61.4	0.0	0.0	3.34	61.4	0.0	0.0
72	85	2.95	7	0.00	0.0	0.0	50.0	2.95	0.0	0.0	50.0
			2	0.00	0.0	10.0	0.0	2.95	0.0	10.0	0.0
			1	0.00	0.0	12.0	0.0	2.95	0.0	12.0	0.0
85	86	2.95	7	0.00	0.0	0.0	50.0	2.95	0.0	0.0	50.0
			2	0.00	0.0	10.0	0.0	2.95	0.0	10.0	0.0
			1	0.00	0.0	12.0	0.0	2.95	0.0	12.0	0.0
86	87	2.95	7	0.00	0.0	0.0	50.0	2.95	0.0	0.0	50.0
			2	0.00	0.0	10.0	0.0	2.95	0.0	10.0	0.0
			1	0.00	0.0	12.0	0.0	2.95	0.0	12.0	0.0
87	88	2.45	7	0.00	0.0	0.0	50.0	2.45	0.0	0.0	50.0
			2	0.00	0.0	10.0	0.0	2.45	0.0	10.0	0.0
			1	0.00	0.0	12.0	0.0	2.45	0.0	12.0	0.0
88	74	2.45	7	0.00	0.0	0.0	50.0	2.45	0.0	0.0	50.0
			2	0.00	-0.0	10.0	0.0	2.45	-0.0	10.0	0.0
			1	0.00	-0.0	12.0	0.0	2.45	-0.0	12.0	0.0
89	106	2.95	7	0.00	0.0	0.0	50.0	2.95	0.0	0.0	50.0
			2	0.00	0.0	10.0	0.0	2.95	0.0	10.0	0.0
			7	0.00	0.0	0.0	50.0	2.95	0.0	0.0	50.0
			2	0.00	0.0	10.0	0.0	2.95	0.0	10.0	0.0
			1	0.00	0.0	12.0	0.0	2.95	0.0	12.0	0.0

106	107	2.95	7	0.00	0.0	0.0	50.0	2.95	0.0	0.0	50.0
			2	0.00	0.0	10.0	0.0	2.95	0.0	10.0	0.0
			7	0.00	0.0	0.0	50.0	2.95	0.0	0.0	50.0
			2	0.00	0.0	10.0	0.0	2.95	0.0	10.0	0.0
			1	0.00	0.0	12.0	0.0	2.95	0.0	12.0	0.0
107	108	2.95	7	0.00	0.0	0.0	50.0	2.95	0.0	0.0	50.0
			2	0.00	0.0	10.0	0.0	2.95	0.0	10.0	0.0
			7	0.00	0.0	0.0	50.0	2.95	0.0	0.0	50.0
			2	0.00	0.0	10.0	0.0	2.95	0.0	10.0	0.0
			1	0.00	0.0	12.0	0.0	2.95	0.0	12.0	0.0
108	109	2.45	7	0.00	0.0	0.0	50.0	2.45	0.0	0.0	50.0
			2	0.00	0.0	10.0	0.0	2.45	0.0	10.0	0.0
			7	0.00	0.0	0.0	50.0	2.45	0.0	0.0	50.0
			2	0.00	0.0	10.0	0.0	2.45	0.0	10.0	0.0
			1	0.00	0.0	12.0	0.0	2.45	0.0	12.0	0.0
109	95	2.45	7	0.00	0.0	0.0	50.0	2.45	0.0	0.0	50.0
			2	0.00	-0.0	10.0	0.0	2.45	-0.0	10.0	0.0
			7	0.00	0.0	0.0	50.0	2.45	0.0	0.0	50.0
			2	0.00	-0.0	10.0	0.0	2.45	-0.0	10.0	0.0
			1	0.00	-0.0	12.0	0.0	2.45	-0.0	12.0	0.0
111	128	2.95	7	0.00	0.0	0.0	50.0	2.95	0.0	0.0	50.0
			2	0.00	0.0	10.0	0.0	2.95	0.0	10.0	0.0
			7	0.00	0.0	0.0	50.0	2.95	0.0	0.0	50.0
			2	0.00	0.0	10.0	0.0	2.95	0.0	10.0	0.0
			1	0.00	0.0	12.0	0.0	2.95	0.0	12.0	0.0
128	129	2.95	7	0.00	0.0	0.0	50.0	2.95	0.0	0.0	50.0
			2	0.00	0.0	10.0	0.0	2.95	0.0	10.0	0.0
			7	0.00	0.0	0.0	50.0	2.95	0.0	0.0	50.0
			2	0.00	0.0	10.0	0.0	2.95	0.0	10.0	0.0
			1	0.00	0.0	12.0	0.0	2.95	0.0	12.0	0.0
129	130	2.95	7	0.00	0.0	0.0	50.0	2.95	0.0	0.0	50.0
			2	0.00	0.0	10.0	0.0	2.95	0.0	10.0	0.0
			7	0.00	0.0	0.0	50.0	2.95	0.0	0.0	50.0
			2	0.00	0.0	10.0	0.0	2.95	0.0	10.0	0.0
			1	0.00	0.0	12.0	0.0	2.95	0.0	12.0	0.0
130	131	2.45	7	0.00	0.0	0.0	50.0	2.45	0.0	0.0	50.0
			2	0.00	0.0	10.0	0.0	2.45	0.0	10.0	0.0
			7	0.00	0.0	0.0	50.0	2.45	0.0	0.0	50.0
			2	0.00	0.0	10.0	0.0	2.45	0.0	10.0	0.0
			1	0.00	0.0	12.0	0.0	2.45	0.0	12.0	0.0
131	117	2.45	7	0.00	0.0	0.0	50.0	2.45	0.0	0.0	50.0
			2	0.00	-0.0	10.0	0.0	2.45	-0.0	10.0	0.0
			7	0.00	0.0	0.0	50.0	2.45	0.0	0.0	50.0
			2	0.00	-0.0	10.0	0.0	2.45	-0.0	10.0	0.0
			1	0.00	-0.0	12.0	0.0	2.45	-0.0	12.0	0.0
132	149	2.95	7	0.00	0.0	0.0	50.0	2.95	0.0	0.0	50.0
			2	0.00	0.0	10.0	0.0	2.95	0.0	10.0	0.0
			7	0.00	0.0	0.0	50.0	2.95	0.0	0.0	50.0
			2	0.00	0.0	10.0	0.0	2.95	0.0	10.0	0.0
			1	0.00	0.0	12.0	0.0	2.95	0.0	12.0	0.0

149	150	2.95	7	0.00	0.0	0.0	50.0	2.95	0.0	0.0	50.0
			2	0.00	0.0	10.0	0.0	2.95	0.0	10.0	0.0
			7	0.00	0.0	0.0	50.0	2.95	0.0	0.0	50.0
			2	0.00	0.0	10.0	0.0	2.95	0.0	10.0	0.0
			1	0.00	0.0	12.0	0.0	2.95	0.0	12.0	0.0
150	151	2.95	7	0.00	0.0	0.0	50.0	2.95	0.0	0.0	50.0
			2	0.00	0.0	10.0	0.0	2.95	0.0	10.0	0.0
			7	0.00	0.0	0.0	50.0	2.95	0.0	0.0	50.0
			2	0.00	0.0	10.0	0.0	2.95	0.0	10.0	0.0
			1	0.00	0.0	12.0	0.0	2.95	0.0	12.0	0.0
151	152	2.45	7	0.00	0.0	0.0	50.0	2.45	0.0	0.0	50.0
			2	0.00	0.0	10.0	0.0	2.45	0.0	10.0	0.0
			7	0.00	0.0	0.0	50.0	2.45	0.0	0.0	50.0
			2	0.00	0.0	10.0	0.0	2.45	0.0	10.0	0.0
			1	0.00	0.0	12.0	0.0	2.45	0.0	12.0	0.0
152	138	2.45	7	0.00	0.0	0.0	50.0	2.45	0.0	0.0	50.0
			2	0.00	-0.0	10.0	0.0	2.45	-0.0	10.0	0.0
			7	0.00	0.0	0.0	50.0	2.45	0.0	0.0	50.0
			2	0.00	-0.0	10.0	0.0	2.45	-0.0	10.0	0.0
			1	0.00	-0.0	12.0	0.0	2.45	-0.0	12.0	0.0
153	162	2.95	7	0.00	0.0	0.0	50.0	2.95	0.0	0.0	50.0
			2	0.00	0.0	10.0	0.0	2.95	0.0	10.0	0.0
			1	0.00	0.0	12.0	0.0	2.95	0.0	12.0	0.0
162	163	2.95	7	0.00	0.0	0.0	50.0	2.95	0.0	0.0	50.0
			2	0.00	0.0	10.0	0.0	2.95	0.0	10.0	0.0
			1	0.00	0.0	12.0	0.0	2.95	0.0	12.0	0.0
163	164	2.95	7	0.00	0.0	0.0	50.0	2.95	0.0	0.0	50.0
			2	0.00	0.0	10.0	0.0	2.95	0.0	10.0	0.0
			1	0.00	0.0	12.0	0.0	2.95	0.0	12.0	0.0
164	165	2.45	7	0.00	0.0	0.0	50.0	2.45	0.0	0.0	50.0
			2	0.00	0.0	10.0	0.0	2.45	0.0	10.0	0.0
			1	0.00	0.0	12.0	0.0	2.45	0.0	12.0	0.0
165	166	2.45	7	0.00	0.0	0.0	50.0	2.45	0.0	0.0	50.0
			2	0.00	0.0	10.0	0.0	2.45	0.0	10.0	0.0
			1	0.00	0.0	12.0	0.0	2.45	0.0	12.0	0.0
167	171	0.50	1	0.00	0.0	375.0	0.0	0.50	0.0	375.0	0.0
176	180	0.65	1	0.00	0.0	375.0	0.0	0.65	0.0	375.0	0.0
168	172	0.50	1	0.00	0.0	375.0	0.0	0.50	0.0	375.0	0.0
177	181	0.65	1	0.00	0.0	375.0	0.0	0.65	0.0	375.0	0.0
169	173	0.50	1	0.00	0.0	375.0	0.0	0.50	0.0	375.0	0.0
178	182	0.65	1	0.00	0.0	375.0	0.0	0.65	0.0	375.0	0.0
170	174	0.50	1	0.00	0.0	375.0	4.1	0.50	0.0	375.0	4.1
179	183	0.65	1	0.00	0.0	375.0	0.0	0.65	0.0	375.0	0.0

Carichi concentrati

Nodo I	Nodo J	L [m]	Condizione di carico	x [m]	Px [kg]	Py [kg]	Pz [kg]	Mx [kgm]	My [kgm]	Mz [kgm]
25	26	11.00	3	5.50	0.0	4350.0	0.0			
			4	5.50	0.0	2500.0	0.0			

28	29	11.00	3	5.50	0.0	1250.0	0.0			
171	172	11.00	3	5.50	0.0	1000.0	0.0			
			4	5.50	0.0	10000.0	0.0			
176	177	11.00	4	5.50	0.0	10000.0	0.0			
			3	5.50	0.0	1000.0	0.0			

Carichi distribuiti

Nodo	Condizione	Peso Proprio [kg]
1	1	4166.7
5	1	4166.7
6	1	4166.7
11	1	4166.7
13	1	4166.7
14	1	4166.7
15	1	4166.7
18	1	4166.7
19	1	4166.7
20	1	4166.7
21	1	4166.7

1.8 Stato del programma:

Maschera dei vincoli corrente:

- Ux= **LIBERA** Uy= **LIBERA** Uz= **LIBERA**
- Rx= **LIBERA** Ry= **LIBERA** Rz= **LIBERA**

Nodi:

- Nodi attivi ..... : 213 (Non appartenti a solaio 213)
- Nodi con numerazione nodale bloccata : 0
- Nodi cancellati..... : 0
- Nodi k ..... : 244

Elementi:

- Pilastro : 152
- Trave : 233
- Trave di fondazione : 27

- Plinto : 11

Lista materiali introdotti:

Materiale Numero	Tipo	E [kg/cm²]	v	α 1/[1/°C]	Peso Specifico [kg/m³]
1	Calcestruzzo	3.0e+005	0.12	0.000012	2500.0
2	Acciaio	2.1e+006	0.33	0.000012	7850.0

Lista terreni impiegati:

- 1 Costante di Sottofondo = 10.0 [kg/cm³] Default

Pilastro Lista sezioni introdotte:

Sezione	Materiale	Dimensioni [cm]	
1	1	B= 80 H= 100	Rett. Pil 80x100(D.B.)
2	2		HEB 300 Baraccatura(D.B.)
3	2		HEB 200 Appoggio setto(D.B.)
4	1	B= 80 H= 80	Rett. Pil 80x80(D.B.)
11	1	B= 55 H= 70 b= 25 h= 45	a Tr T rovescia

Sezione	Area [cm²]	Jx [cm^4]	Jy [cm^4]	Jxy [cm^4]	Jt [cm^4]	Xx	Xy
1	8000.00	6666666	4266666	0	8428855	1.2	1.2
2	149.34	25204	8564	0	185	4.2	1.4
3	78.20	5703	2004	0	59	4.1	1.4
4	6400.00	3413333	3413333	0	5757983	1.2	1.2
11	3100.00	1061473	656458	0	1343943	1.2	1.2

Trave Lista sezioni introdotte:

Sezione	Materiale	Dimensioni [cm]	
1	1	B= 55 H= 70 b= 40 h= 45	a _| Soppalco(D.B.)
2	2		HEA 500 Carroponte inf.(D.B.)
3	1	B= 55 H= 70 b= 30 h= 40	a |~ Copertura(D.B.)

4	1	B= 60 H= 80 b= 30 h= 30	a T Tegoli(D.B.)
5	1	B= 30 H= 25	Rett. Cordolo(D.B.)
6	2		Tubi Ret H 120x80x6.3 Baraccatura(D.B.)
7	1	B= 50 H= 70 b= 35 h= 45	a L L ridotta(D.B.)
8	1	B= 80 H= 50	Rett. Appoggio(D.B.)
9	2		HEB 600 Trave_carroponte-sup(D.B.)
10	2		FUNI 4ø90 Controventi solai(D.B.) Dummy
11	1	B= 55 H= 70 b= 25 h= 45	a Tr T rovescia(D.B.)
12	1	B= 30 H= 40	Rett. Cordolo copertura(D.B.)
13	1	B= 65 H= 70 b= 43 h= 40	a |~ Copertura(D.B.)
14	2		IPE 500 Appoggio-acciaio(D.B.)

Sezione	Area [cm²]	Jx [cm^4]	Jy [cm^4]	Jxy [cm^4]	Jt [cm^4]	Xx	Xy
1	3475.00	1342221	797303	186960	1703892	1.2	1.2
2	197.80	87092	10368	0	309	3.3	1.5
3	3100.00	1143253	721882	279436	1237874	1.2	1.2
4	3300.00	1756591	652500	-0	1230673	1.2	1.2
5	750.00	39062	56250	0	74913	1.2	1.2
6	21.53	205	381	0	471	2.1	1.5
7	3125.00	1197010	593510	-165375	1331560	1.2	1.2
8	4000.00	833333	2133333	0	1969616	1.2	1.2
9	270.22	171218	13531	-0	667	2.9	1.6
10	223.12	1	1	0	0	1.0	1.0
11	3100.00	1061473	656458	0	1343943	1.2	1.2
12	1200.00	160000	90000	0	186385	1.2	1.2
13	3890.00	1499625	1218511	331951	2106042	1.2	1.2
14	115.68	48279	2142	-0	89	2.3	1.8

Trave di fondazione Lista sezioni introdotte:

Sezione	Materiale	Dimensioni [cm]	
1	1	B= 40 H= 30	Rett. Cordolo_fondazione(D.B.) Terreno numero 1 Default
2	1	B= 85 H= 30	Rett. Cordolo_fondazione-2(D.B.) Terreno numero 1 Default
3	1	B= 120 H= 30	Rett. Cordolo_fondazione-2(D.B.) Terreno numero 1 Default

Sezione	Area [cm²]	Jx [cm^4]	Jy [cm^4]	Jxy [cm^4]	Jt [cm^4]	Xx	Xy
1	1200.00	90000	160000	0	186385	1.2	1.2
2	2550.00	191250	1535312	0	631218	1.2	1.2

3	3600.00	270000	4319999	0	997002	1.2	1.2

Plinto Lista sezioni introdotte:

Sez.	Mat.	B [cm]	H [cm]	b [cm]	h[cm]	h.P.[cm]	h.z.[cm]	t[cm]		Terreno
1	1	200	200			80			Plinto tozzo esterno(D.B.)	Terreno numero 1 Default
2	1	140	200			80			Plinto tozzo Plinto estremità(D.B.)	Terreno numero 1 Default
3	1	200	150			80			Plinto tozzo estremità alto(D.B.)	Terreno numero 1 Default

1.9 Tipo di analisi:

Normativa di riferimento Analisi condotta agli Stati Limite in accordo con il Testo Unico 2008

Tipo di analisi Statica + Dinamica senza condensazione

Numero di condizioni di carico ... : 7

Numero di combinazioni di carico . : 17

Condizione	
1	Peso proprio
2	Permanente Strutturale
3	Permanente NON Strutturale
4	Accidentale
5	Vento y
6	Neve
7	Vento x
8	Sisma 0SLV
9	Sisma 90SLV
10	Sisma 0SLD
11	Sisma 90SLD

Combinazioni di carico:

Combinazioni agli Stati Limite Ultimi

Combinazione di carico numero

1	SLU Accidentale
2	SLU Vento y
3	SLU Neve
4	SLU Vento x

Comb.\Cond	1	2	3	4	5	6	7
1	1.3	1.3	1.3	1.5	0.9	0.75	
2	1.3	1.3	1.3	1.05	1.5	0.75	
3	1.3	1.3	1.3	1.05	0.9	1.5	
4	1.3	1.3	1.3	1.05		0.75	1.5

Combinazioni agli Stati Limite di Salvaguardia della Vita

Combinazione di carico numero

5	SLV Sisma 0
6	SLV Sisma 90

Comb.\Cond	1	2	3	4	8	9
5	1	1	1	0.6	1	0.3
6	1	1	1	0.6	0.3	1

Combinazioni RARE Stati Limite di Esercizio

Combinazione di carico numero

7	SLE R Accidentale
8	SLE R Vento y
9	SLE R Neve
10	SLE R Vento x

Comb.\Cond	1	2	3	4	5	6	7
7	1	1	1	1	0.6	0.5	
8	1	1	1	0.7	1	0.5	
9	1	1	1	0.7	0.6	1	
10	1	1	1	0.7		0.5	1

Combinazioni FREQUENTI Stati Limite di Esercizio

Combinazione di carico numero

11	SLE F Accidentale
12	SLE F Vento y
13	SLE F Neve
14	SLE F Vento x

Comb.\Cond	1	2	3	4	5	6	7
11	1	1	1	0.7		1	
12	1	1	1	0.6	0.2	1	
13	1	1	1	0.6		0.2	

14	1	1	1	0.6		1	0.2

Combinazioni QUASI PERMANENTI Stati Limite di Esercizio

Combinazione di carico numero

15	Q.Perm.

Comb.\Cond 1 2 3 4 5

15	1	1	1	1	1

Combinazioni agli Stati Limite di Danno

Combinazione di carico numero

16	SLD Sisma 0
17	SLD Sisma 90

Comb.\Cond 1 2 3 4 10 11

16	1	1	1	0.6		1	0.3
17	1	1	1	0.6	0.3	1	

1.10 Parametri di calcolo Analisi Dinamica

Spettro in accordo con TU 2008

- Macomer NU Longitudine 8.7800 Latitudine 40.2681
- Tipo di Terreno B
- Coefficiente di amplificazione topografica (S_T) 1.0000
- Vita nominale della costruzione (V_N) 50.0 anni
- Classe d'uso II coefficiente C_U 1.0
- Classe di duttilità impostata Bassa
- Fattore di struttura massimo q_o per sisma orizzontale 3.00
- Fattore di duttilità K_R per sisma orizzontale 1.15
- Fattore riduttivo regolarità in altezza K_R 0.80
- Fattore riduttivo per la presenza di setti K_W 1.00
- Fattore di struttura q per sisma orizzontale 2.76
- Fattore di struttura q per sisma verticale 1.50
- Smorzamento Viscoso (0.05 = 5%) 0.05

TU 2008 SLV H

- Probabilità di superamento (P_{VR}) 10.0 e periodo di ritorno (T_R) 475 (anni)
- S_s 1.200
- T_B 0.15 [sec]
- T_C 0.46 [sec]

- T_D 1.80 [sec]
- a_g/g 0.0510
- F_o 2.8799
- T_C^* 0.3400

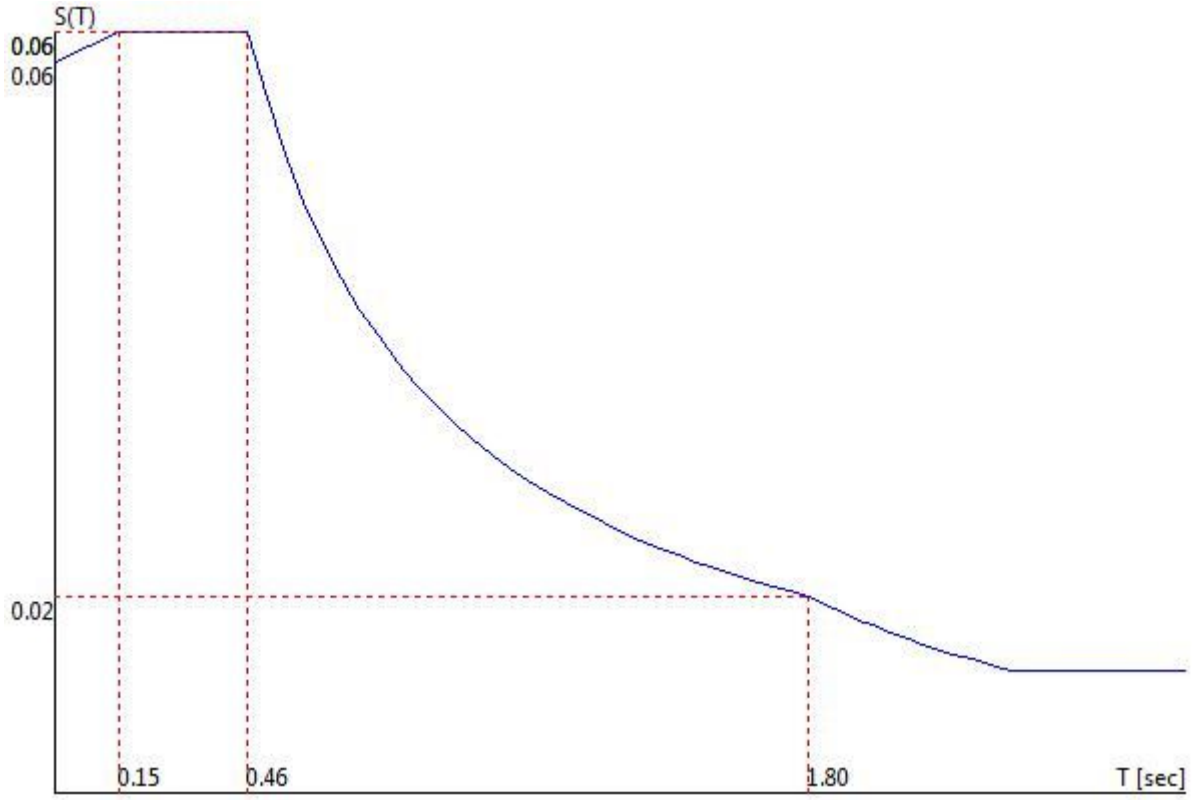

TU 2008 SLD H

- Probabilità di superamento (P_{VR}) 63.0 e periodo di ritorno (T_R) 50 (anni)
- S_s 1.200
- T_B 0.14 [sec]
- T_C 0.42 [sec]
- T_D 1.70 [sec]
- a_g/g 0.0240
- F_o 2.6705
- T_C^* 0.2961

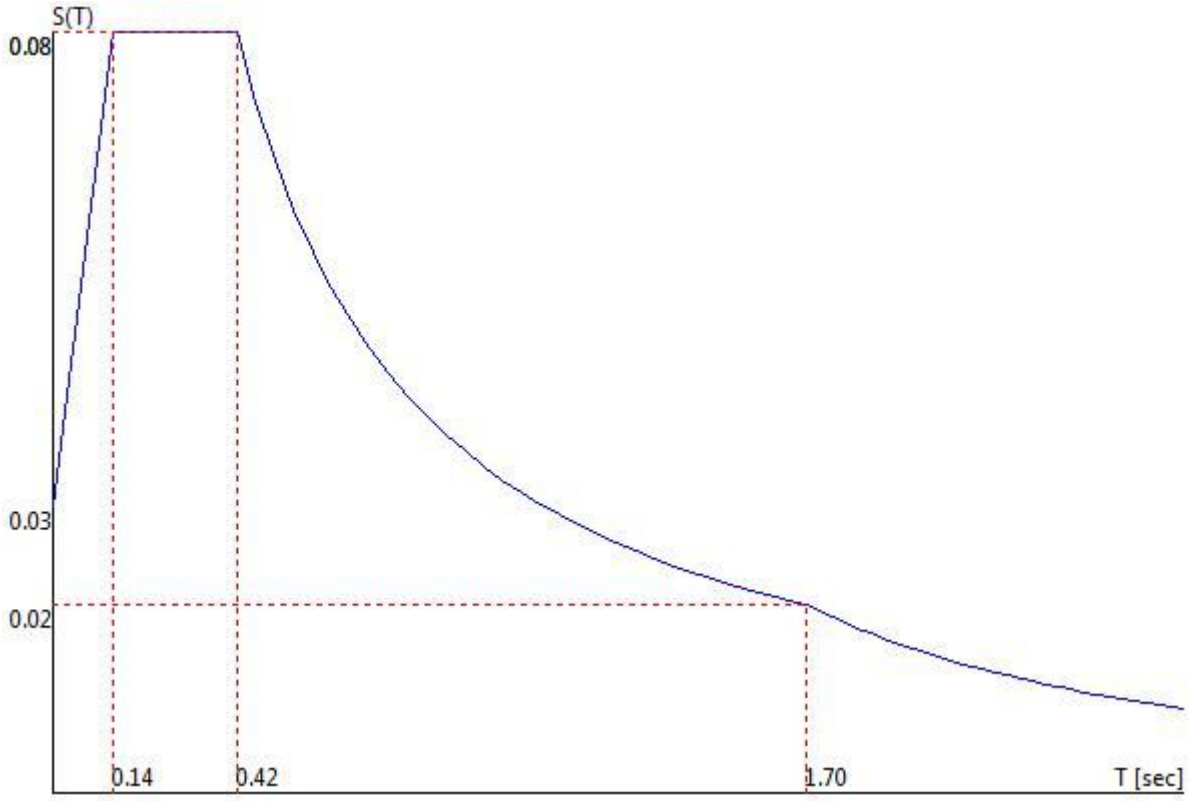

Fattori di partecipazione per il calcolo delle masse:

Condizione	Commento	Fattore di Partecipazione
1	Peso proprio	1.000000
2	Permanente Strutturale	1.000000
3	Permanente NON Strutturale	1.000000
4	Accidentale	0.600000
5	Vento y	0.000000
6	Neve	0.000000
7	Vento x	0.000000

Direzioni d'ingresso del Sisma

- SLV Direzione 1 Angolo in pianta 0.00 [°]
- SLV Direzione 2 Angolo in pianta 90.00 [°]
- SLD Direzione 3 Angolo in pianta 0.00 [°]
- SLD Direzione 4 Angolo in pianta 90.00 [°]

Analisi Modale via Vettori di Ritz **Percentuale della massa di piano utilizzata per la valutazione delle azioni dovute ad eccentricità addizionali del centro di massa 100.0%**
Calcolo svolto **NON** tenendo conto delle capacità taglianti/flessionali ridotte delle sezioni. Revisione del progetto 236

2 DATI DI OUTPUT

2.1 Sollecitazioni nei pilastri

Convenzioni adottate

Le sollecitazioni nei pilastri sono da intendersi nel sistema di riferimento locale dell'elemento e si riferiscono all'asta.

L'orientamento del pilastro nello spazio è definito a mezzo del nodo *K*. La terna di riferimento locale dell'asta è così disposta:

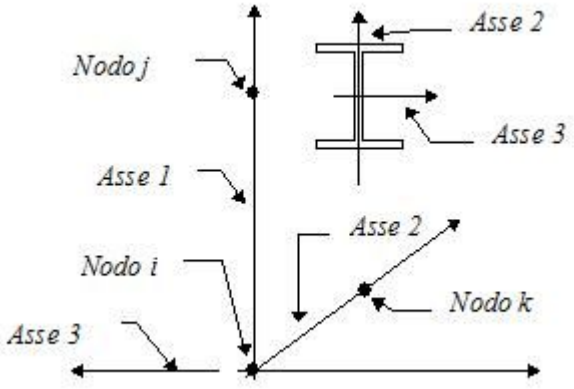

Per qunto concerne i segni positivi assunti per le varie componenti di sollecitazione si assumono come positivi i versi e le sollecitazioni così diretti:

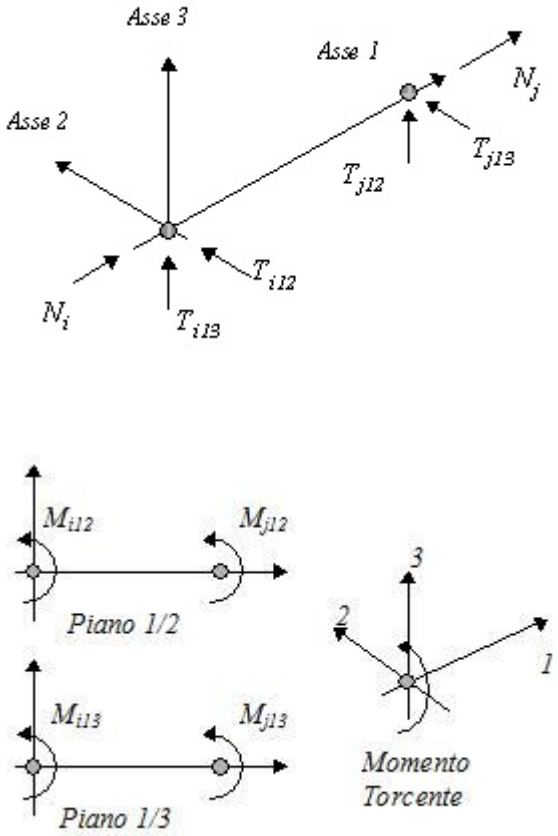

Per ogni pilastro vengono riportate, nelle varie combinazioni di carico, le componenti di sollecitazione alle estremità dell'asta.

Comb.	Nodo	N [kg]	T1-2 [kg]	T1-3 [kg]	Mt [kgm]	M1-3 [kgm]	M1-2 [kgm]
1	1	33957.0	-6046.2	285.9	-1189.8	-1520.8	-37347.3
	22	-33717.4	4993.2	-285.9	1189.8	-394.8	365.5
2	1	24034.2	-9793.3	507.2	-1926.2	-2768.5	-60368.7
	22	-23794.7	8038.3	-507.2	1926.2	-629.6	632.9
3	1	30918.8	-6047.9	283.9	-1150.0	-1518.0	-37421.7
	22	-30679.3	4994.9	-283.9	1150.0	-384.1	428.3
4	1	39903.1	-798.5	-2799.7	-4941.1	26627.9	-5439.6
	22	-39663.6	798.5	2799.7	4941.1	-7869.8	89.9
5	1	22306.3	-260.4	1922.7	-192.3	-16391.7	-1935.2
	22	-22122.1	260.4	-1922.7	192.3	3401.2	88.0
6	1	21897.7	-1880.9	899.2	-1362.7	-7723.8	-12367.0
	22	-21713.5	1880.9	-899.2	1362.7	-42.8	-955.9
7	1	25105.6	-4042.1	188.9	-808.0	-1017.3	-25005.0
	22	-24921.4	3340.1	-188.9	808.0	-248.6	274.5
8	1	18490.5	-6540.2	336.5	-1298.9	-1849.1	-40352.6
	22	-18306.2	5370.2	-336.5	1298.9	-405.1	452.7
9	1	23080.2	-4043.3	187.6	-781.4	-1015.5	-25054.6
	22	-22895.9	3341.3	-187.6	781.4	-241.5	316.4
10	1	29069.7	-543.6	-1868.1	-3308.9	17748.5	-3733.2

Comb.	Nodo	N [kg]	T1-2 [kg]	T1-3 [kg]	Mt [kgm]	M1-3 [kgm]	M1-2 [kgm]
	22	-28885.5	543.6	1868.1	3308.9	-5231.9	90.8
11	1	28233.8	-242.5	-28.9	-48.3	166.8	-1741.9
	22	-28049.6	242.5	28.9	48.3	26.7	117.4
12	1	25456.1	-1497.5	44.3	-293.4	-241.8	-9448.0
	22	-25271.9	1263.5	-44.3	293.4	-55.2	198.9
13	1	25327.7	-171.4	-20.6	-94.9	79.5	-1286.9
	22	-25143.4	171.4	20.6	94.9	58.5	138.5
14	1	27572.0	-298.2	-396.6	-695.4	3677.7	-2124.2
	22	-27387.7	298.2	396.6	695.4	-1020.6	126.5
15	1	20515.9	-6539.0	337.8	-1325.4	-1851.0	-40302.9
	22	-20331.7	5369.0	-337.8	1325.4	-412.2	410.9
16	1	22088.0	-274.9	2096.7	-199.4	-17752.2	-2021.6
	22	-21903.7	274.9	-2096.7	199.4	3702.5	66.0
17	1	21649.6	-2047.3	984.6	-1465.1	-8376.0	-13389.4
	22	-21465.4	2047.3	-984.6	1465.1	-53.5	-1134.0
1	22	27661.0	-4994.1	356.2	-1184.8	394.8	2602.0
	34	-27580.6	4640.4	-356.2	1184.8	-1196.3	-13440.8
2	22	18300.8	-8038.9	594.1	-1922.0	629.6	2053.5
	34	-18220.3	7449.6	-594.1	1922.0	-1966.2	-19478.0
3	22	25185.3	-4994.8	337.4	-1148.0	384.1	2257.9
	34	-25104.9	4641.2	-337.4	1148.0	-1143.4	-13098.4
4	22	34169.7	-831.1	-5733.3	-6654.8	7869.8	2596.1
	34	-34089.2	831.1	5733.3	6654.8	5030.1	-4466.2
5	22	18155.9	-250.1	1883.9	-184.1	-3401.2	1848.6
	34	-18094.1	250.1	-1883.9	184.1	-2361.0	-2325.6
6	22	17743.7	-1801.8	883.5	-1419.4	42.8	2894.5
	34	-17681.8	1801.8	-883.5	1419.4	-1951.0	-6378.4
7	22	20454.9	-3340.9	238.9	-804.7	248.6	1912.0
	34	-20393.0	3105.1	-238.9	804.7	-786.1	-9163.8
8	22	14214.7	-5370.8	397.4	-1296.1	405.1	1546.3
	34	-14152.8	4977.9	-397.4	1296.1	-1299.3	-13188.6
9	22	18804.4	-3341.4	226.3	-780.1	241.5	1682.7
	34	-18742.6	3105.6	-226.3	780.1	-750.8	-8935.5
10	22	24794.0	-565.6	-3820.8	-4451.3	5231.9	1908.1
	34	-24732.1	565.6	3820.8	4451.3	3364.9	-3180.7
11	22	23958.1	-242.7	-12.3	-47.7	-26.7	1881.5
	34	-23896.2	242.7	12.3	47.7	54.5	-2427.6
12	22	21305.4	-1263.6	67.0	-292.9	55.2	1737.5
	34	-21243.5	1185.1	-67.0	292.9	-206.1	-4492.3
13	22	21177.0	-172.5	6.6	-93.3	-58.5	1797.9
	34	-21115.1	172.5	-6.6	93.3	43.6	-2186.1
14	22	23421.2	-302.6	-776.6	-924.0	1020.6	1809.9
	34	-23359.4	302.6	776.6	924.0	726.8	-2490.7
15	22	15865.2	-5370.3	409.9	-1320.7	412.2	1775.7
	34	-15803.3	4977.4	-409.9	1320.7	-1334.6	-13416.8
16	22	17937.7	-262.6	2046.9	-188.4	-3702.5	1870.9

Comb.	Nodo	N [kg]	T1-2 [kg]	T1-3 [kg]	Mt [kgm]	M1-3 [kgm]	M1-2 [kgm]
	34	-17875.8	262.6	-2046.9	188.4	-2796.6	-2368.4
17	22	17495.4	-1957.3	967.1	-1526.7	53.5	3073.2
	34	-17433.5	1957.3	-967.1	1526.7	-2224.7	-6849.6
1	34	10957.0	-1262.9	-451.0	-2989.3	879.7	-9992.9
	72	-10716.2	752.1	451.0	2989.3	586.2	6718.6
2	34	7164.1	-1548.7	-831.1	-4899.7	1641.0	-13833.7
	72	-6923.2	697.4	831.1	4899.7	1060.2	10183.8
3	34	10410.7	-1235.5	-444.3	-2910.8	891.4	-9962.7
	72	-10169.8	724.7	444.3	2910.8	552.7	6777.3
4	34	12817.7	-658.6	106.7	-2124.3	-5915.1	-3665.9
	72	-12576.8	658.6	-825.8	2124.3	4399.9	1525.5
5	34	3452.7	-258.7	592.1	-262.9	2377.1	-2237.4
	72	-3267.5	258.7	-592.1	262.9	-2151.5	994.4
6	34	4093.2	-136.3	-168.3	-1495.6	2177.4	-4426.3
	72	-3908.0	136.3	168.3	1495.6	-1160.1	2773.9
7	34	7583.3	-877.6	-291.2	-2011.7	553.7	-6873.1
	72	-7398.0	537.1	291.2	2011.7	392.7	4574.2
8	34	5054.6	-1068.2	-544.6	-3285.2	1061.3	-9433.6
	72	-4869.4	500.6	544.6	3285.2	708.8	6884.4
9	34	7219.0	-859.4	-286.8	-1959.3	561.6	-6853.0
	72	-7033.8	518.8	286.8	1959.3	370.4	4613.4
10	34	8823.7	-474.8	80.6	-1435.0	-3976.1	-2655.1
	72	-8638.4	474.8	-560.0	1435.0	2935.2	1112.2
11	34	8530.2	-485.5	89.9	-45.7	-207.4	-2634.5
	72	-8345.0	485.5	-89.9	45.7	-84.6	1056.5
12	34	7541.7	-590.6	-36.5	-682.9	47.2	-3956.7
	72	-7356.4	477.1	36.5	682.9	71.3	2221.8
13	34	5914.4	-401.3	78.3	-125.2	-229.9	-2179.8
	72	-5729.1	401.3	-78.3	125.2	-24.5	875.8
14	34	8295.5	-471.9	88.6	-312.8	-960.3	-2601.0
	72	-8110.2	471.9	-184.5	312.8	516.6	1067.3
15	34	5418.9	-1086.4	-549.1	-3337.6	1053.4	-9453.7
	72	-5233.6	518.9	549.1	3337.6	731.1	6845.2
16	34	3284.4	-238.7	634.0	-270.0	2816.2	-551.4
	72	-3099.2	238.7	-634.0	270.0	-2476.0	1011.1
17	34	3980.4	-95.3	-191.7	-1609.6	2473.8	966.2
	72	-3795.1	95.3	191.7	1609.6	-1338.9	2983.0
1	72	10689.8	-2295.8	-152.9	-2868.9	-583.3	-6743.4
	89	-10689.8	2295.8	152.9	2868.9	736.1	4447.7
2	72	6914.1	-3376.2	-350.7	-4701.3	-1053.5	-10226.0
	89	-6914.1	3376.2	350.7	4701.3	1404.2	6849.8
3	72	10138.3	-2297.0	-159.7	-2790.3	-543.3	-6801.7
	89	-10138.3	2297.0	159.7	2790.3	703.0	4504.7
4	72	12426.4	-689.4	-233.3	-1752.9	-4314.5	-1525.3
	89	-12426.4	689.4	233.3	1752.9	4547.8	835.9

Comb.	Nodo	N [kg]	T1-2 [kg]	T1-3 [kg]	Mt [kgm]	M1-3 [kgm]	M1-2 [kgm]
5	72	3285.5	-346.2	875.1	-261.0	2102.4	-988.0
	89	-3285.5	346.2	-875.1	261.0	-2722.4	640.6
6	72	3893.3	-828.1	-49.8	-1492.9	1154.2	-2778.2
	89	-3893.3	828.1	49.8	1492.9	-1328.8	1979.0
7	72	7373.9	-1562.7	-86.9	-1931.2	-390.6	-4589.5
	89	-7373.9	1562.7	86.9	1931.2	477.5	3026.8
8	72	4856.8	-2283.0	-218.8	-3152.8	-704.1	-6911.2
	89	-4856.8	2283.0	218.8	3152.8	922.9	4628.2
9	72	7006.2	-1563.6	-91.4	-1878.8	-364.0	-4628.4
	89	-7006.2	1563.6	91.4	1878.8	455.4	3064.8
10	72	8531.7	-491.8	-140.5	-1187.2	-2878.1	-1110.8
	89	-8531.7	491.8	140.5	1187.2	3018.6	618.9
11	72	8297.4	-421.5	105.7	-43.5	89.2	-1052.2
	89	-8297.4	421.5	-105.7	43.5	-194.9	630.7
12	72	7314.9	-788.5	39.8	-654.6	-65.6	-2223.5
	89	-7314.9	788.5	-39.8	654.6	25.8	1435.0
13	72	5683.4	-340.7	112.1	-123.5	24.6	-869.5
	89	-5683.4	340.7	-112.1	123.5	-136.7	528.8
14	72	8049.9	-430.2	55.5	-261.5	-500.4	-1063.4
	89	-8049.9	430.2	-55.5	261.5	444.9	633.1
15	72	5224.4	-2282.2	-214.2	-3205.2	-730.8	-6872.4
	89	-5224.4	2282.2	214.2	3205.2	945.0	4590.2
16	72	3122.1	-348.0	939.8	-268.1	2427.6	-1004.8
	89	-3122.1	348.0	-939.8	268.1	-3027.7	656.1
17	72	3782.8	-875.0	-65.0	-1607.0	1333.7	-2987.9
	89	-3782.8	875.0	65.0	1607.0	-1490.0	2146.8
1	89	10625.0	-2547.2	39.5	-2688.6	-724.8	-4466.4
	111	-10625.0	2547.2	-39.5	2688.6	685.3	1919.2
2	89	6867.1	-4036.0	30.2	-4402.7	-1390.3	-6888.3
	111	-6867.1	4036.0	-30.2	4402.7	1360.1	2852.2
3	89	10068.5	-2579.5	29.2	-2610.1	-685.2	-4523.0
	111	-10068.5	2579.5	-29.2	2610.1	656.1	1943.6
4	89	12247.7	-463.2	-397.0	-1200.7	-4460.0	-826.0
	111	-12247.7	463.2	397.0	1200.7	4857.0	362.8
5	89	3268.8	-224.6	728.8	-259.3	2664.1	-627.1
	111	-3268.8	224.6	-728.8	259.3	-2942.9	-194.1
6	89	3847.0	-853.4	-60.0	-1490.2	1310.0	-1975.6
	111	-3847.0	853.4	60.0	1490.2	-470.3	-752.2
7	89	7320.3	-1720.4	35.6	-1810.9	-468.7	-3037.1
	111	-7320.3	1720.4	-35.6	1810.9	433.1	1316.6
8	89	4815.0	-2713.0	29.4	-2953.6	-912.4	-4651.6
	111	-4815.0	2713.0	-29.4	2953.6	883.0	1938.6
9	89	6949.3	-1742.0	28.8	-1758.5	-442.4	-3074.8
	111	-6949.3	1742.0	-28.8	1758.5	413.6	1332.9
10	89	8402.1	-331.1	-255.4	-818.9	-2958.9	-610.1
	111	-8402.1	331.1	255.4	818.9	3214.3	279.0

Comb.	Nodo	N [kg]	T1-2 [kg]	T1-3 [kg]	Mt [kgm]	M1-3 [kgm]	M1-2 [kgm]
11	89	8220.1	-242.1	42.7	-41.7	207.1	-619.2
	111	-8220.1	242.1	-42.7	41.7	-249.8	377.0
12	89	7243.8	-739.6	39.1	-613.4	-12.9	-1430.2
	111	-7243.8	739.6	-39.1	613.4	-26.1	690.6
13	89	5608.0	-193.5	59.6	-122.0	144.4	-515.2
	111	-5608.0	193.5	-59.6	122.0	-204.0	321.7
14	89	7961.2	-263.3	-17.9	-186.5	-422.2	-621.9
	111	-7961.2	263.3	17.9	186.5	440.1	358.6
15	89	5186.0	-2691.5	36.3	-3006.0	-938.8	-4613.9
	111	-5186.0	2691.5	-36.3	3006.0	902.5	1922.4
16	89	3110.0	-227.7	792.3	-266.4	2967.7	-642.5
	111	-3110.0	227.7	-792.3	266.4	-3202.3	197.5
17	89	3738.9	-912.5	-70.6	-1604.3	1471.1	-2144.1
	111	-3738.9	912.5	70.6	1604.3	-486.1	-758.7
1	111	10560.3	-2525.0	187.1	-2491.1	-674.1	-1943.1
	132	-10560.3	2525.0	-187.1	2491.1	487.1	-581.8
2	111	6820.7	-4243.4	360.3	-4074.9	-1347.4	-2899.1
	132	-6820.7	4243.4	-360.3	4074.9	987.1	-1344.3
3	111	9998.7	-2584.4	161.5	-2412.7	-638.3	-1967.1
	132	-9998.7	2584.4	-161.5	2412.7	476.7	-617.4
4	111	12074.0	-224.3	-437.2	-542.5	-4766.8	-353.1
	132	-12074.0	224.3	437.2	542.5	5204.1	128.8
5	111	3248.8	-98.7	635.1	-257.9	2888.5	212.5
	132	-3248.8	98.7	-635.1	257.9	-3359.5	195.1
6	111	3799.4	-795.7	-89.3	-1487.5	474.3	775.2
	132	-3799.4	795.7	89.3	1487.5	-425.7	-445.7
7	111	7266.6	-1696.9	126.8	-1679.1	-424.4	-1330.4
	132	-7266.6	1696.9	-126.8	1679.1	297.6	-366.5
8	111	4773.6	-2842.5	242.3	-2735.0	-873.3	-1967.7
	132	-4773.6	2842.5	-242.3	2735.0	631.0	-874.8
9	111	6892.2	-1736.5	109.8	-1626.8	-400.5	-1346.3
	132	-6892.2	1736.5	-109.8	1626.8	290.7	-390.2
10	111	8275.8	-163.1	-289.4	-380.1	-3152.9	-270.3
	132	-8275.8	163.1	289.4	380.1	3442.3	107.3
11	111	8142.0	-59.9	-51.8	-40.5	263.1	-365.6
	132	-8142.0	59.9	51.8	40.5	-211.3	305.7
12	111	7172.1	-628.1	4.6	-568.7	39.8	-687.0
	132	-7172.1	628.1	-4.6	568.7	-44.4	58.9
13	111	5532.0	-50.4	-9.6	-120.9	212.4	-308.1
	132	-5532.0	50.4	9.6	120.9	-202.9	257.7
14	111	7872.5	-92.2	-101.7	-97.7	-416.2	-347.5
	132	-7872.5	92.2	101.7	97.7	517.9	255.3
15	111	5148.0	-2802.8	259.3	-2787.3	-897.2	-1951.8
	132	-5148.0	2802.8	-259.3	2787.3	637.8	-851.1
16	111	3094.5	-102.6	702.8	-264.8	3144.6	279.9
	132	-3094.5	102.6	-702.8	264.8	-3627.8	181.5

Comb.	Nodo	N [kg]	T1-2 [kg]	T1-3 [kg]	Mt [kgm]	M1-3 [kgm]	M1-2 [kgm]
17	111	3693.5	-861.0	-96.7	-1601.5	489.5	919.8
	132	-3693.5	861.0	96.7	1601.5	-441.0	-549.7
1	132	10495.8	-2380.6	338.8	-2284.6	-475.8	551.8
	153	-10495.8	2380.6	-338.8	2284.6	136.9	-2932.4
2	132	6775.4	-4250.2	694.6	-3731.4	-975.2	1287.4
	153	-6775.4	4250.2	-694.6	3731.4	280.6	-5537.6
3	132	9929.0	-2458.4	284.0	-2206.3	-458.7	587.7
	153	-9929.0	2458.4	-284.0	2206.3	174.6	-3046.1
4	132	11904.4	17.1	-334.3	191.3	-5107.5	-119.4
	153	-11904.4	-17.1	334.3	-191.3	5441.8	136.6
5	132	3225.7	30.1	804.2	-256.5	3306.5	-180.5
	153	-3225.7	-30.1	-804.2	256.5	-3797.2	259.3
6	132	3750.5	-690.5	471.1	-1484.6	433.3	456.0
	153	-3750.5	690.5	-471.1	1484.6	-342.4	-783.5
7	132	7213.0	-1592.6	222.8	-1541.3	-288.7	348.6
	153	-7213.0	1592.6	-222.8	1541.3	66.0	-1941.3
8	132	4732.8	-2839.1	460.0	-2505.9	-621.7	839.0
	153	-4732.8	2839.1	-460.0	2505.9	161.8	-3678.1
9	132	6835.2	-1644.5	186.2	-1489.1	-277.3	372.6
	153	-6835.2	1644.5	-186.2	1489.1	91.1	-2017.1
10	132	8152.2	5.9	-226.0	109.3	-3376.5	-98.8
	153	-8152.2	-5.9	226.0	-109.3	3602.6	104.7
11	132	8063.2	129.9	-150.8	-39.8	225.7	-294.5
	153	-8063.2	-129.9	150.8	39.8	-74.9	424.3
12	132	7100.0	-482.8	-34.3	-522.4	58.9	-56.9
	153	-7100.0	482.8	34.3	522.4	-24.5	-425.9
13	132	5455.5	90.0	-68.2	-120.2	212.1	-244.4
	153	-5455.5	-90.0	68.2	120.2	-144.0	334.4
14	132	7783.9	86.2	-171.5	0.7	-492.1	-244.4
	153	-7783.9	-86.2	171.5	-0.7	663.6	330.7
15	132	5110.7	-2787.2	496.5	-2558.1	-633.1	815.1
	153	-5110.7	2787.2	-496.5	2558.1	136.6	-3602.3
16	132	3075.7	26.1	898.2	-263.4	3570.8	-166.9
	153	-3075.7	-26.1	-898.2	263.4	-4090.0	249.5
17	132	3646.9	-758.0	527.6	-1598.6	448.5	560.1
	153	-3646.9	758.0	-527.6	1598.6	-354.6	-895.4
1	153	10358.7	-1729.9	616.0	-2113.6	-133.2	2886.2
	167	-10272.9	1352.7	-616.0	2113.6	-1345.3	-6585.4
2	153	6658.0	-3534.2	1169.4	-3446.8	-276.7	5460.9
	167	-6572.2	2905.6	-1169.4	3446.8	-2529.7	-13188.6
3	153	9786.3	-1806.7	543.0	-2035.6	-163.6	3000.3
	167	-9700.5	1429.5	-543.0	2035.6	-1139.5	-6883.8
4	153	11664.5	444.6	845.1	911.1	-5342.9	-137.5
	167	-11578.7	-444.6	-845.1	-911.1	3314.8	1204.7
5	153	3144.1	239.8	779.8	-255.3	3740.2	-253.3

Comb.	Nodo	N [kg]	T1-2 [kg]	T1-3 [kg]	Mt [kgm]	M1-3 [kgm]	M1-2 [kgm]
	167	-3078.1	-239.8	-779.8	255.3	-5924.0	846.9
6	153	3644.9	-353.4	438.2	-1481.6	345.3	777.7
	167	-3578.9	353.4	-438.2	1481.6	-3168.9	-1482.4
7	153	7103.6	-1145.3	408.0	-1427.3	-62.9	1911.7
	167	-7037.6	893.8	-408.0	1427.3	-916.2	-4358.6
8	153	4636.4	-2348.1	776.8	-2316.1	-158.6	3628.1
	167	-4570.4	1929.0	-776.8	2316.1	-1705.8	-8760.7
9	153	6722.0	-1196.5	359.2	-1375.3	-83.2	1987.7
	167	-6656.0	945.0	-359.2	1375.3	-779.0	-4557.5
10	153	7974.2	304.4	560.6	589.2	-3536.1	-104.2
	167	-7908.2	-304.4	-560.6	-589.2	2190.5	834.8
11	153	7927.8	440.6	-174.5	-39.7	84.3	-420.9
	167	-7861.8	-440.6	174.5	39.7	334.5	1478.3
12	153	6971.4	-142.3	7.8	-484.3	33.8	418.8
	167	-6905.4	58.4	-7.8	484.3	-52.4	-659.7
13	153	5322.8	307.0	-71.3	-119.7	147.6	-328.7
	167	-5256.8	-307.0	71.3	119.7	23.5	1065.5
14	153	7639.0	388.3	-35.5	96.7	-641.7	-327.6
	167	-7573.0	-388.3	35.5	-96.7	726.8	1259.4
15	153	5018.1	-2297.0	825.6	-2368.1	-138.3	3552.0
	167	-4952.1	1877.9	-825.6	2368.1	-1843.0	-8561.8
16	153	2998.2	236.7	874.3	-262.0	4028.6	-243.5
	167	-2932.2	-236.7	-874.3	262.0	-6404.1	834.7
17	153	3543.5	-409.1	495.0	-1595.5	357.5	888.9
	167	-3477.5	409.1	-495.0	1595.5	-3431.0	-1695.1
1	167	451.7	-1300.4	-387.5	-2413.8	1345.3	11438.0
	184	-332.3	775.5	387.5	2413.8	-50.9	-14904.6
2	167	-999.0	-2842.5	-1262.8	-4433.8	2529.7	16918.0
	184	1118.4	1967.6	1262.8	4433.8	1688.1	-24950.9
3	167	2129.3	-1374.4	-565.9	-2373.5	1139.5	10611.4
	184	-2009.9	849.5	565.9	2373.5	750.6	-14325.3
4	167	4007.5	392.9	-1233.7	-570.7	-3314.8	2519.9
	184	-3888.1	-392.9	1233.7	570.7	7435.2	-1207.6
5	167	-1705.6	292.6	114.0	-727.5	5924.0	1499.0
	184	1797.4	-292.6	-114.0	727.5	-5892.5	-496.7
6	167	-1208.5	-98.1	113.7	-1449.5	3168.9	3830.6
	184	1300.3	98.1	-113.7	1449.5	-1127.0	-4003.4
7	167	252.1	-856.9	-216.6	-1596.6	916.2	7706.5
	184	-160.2	506.9	216.6	1596.6	-192.6	-9984.1
8	167	-715.1	-1885.0	-800.2	-2943.2	1705.8	11359.8
	184	806.9	1301.7	800.2	2943.2	966.7	-16681.6
9	167	1370.5	-906.3	-335.6	-1569.7	779.0	7155.4
	184	-1278.6	556.3	335.6	1569.7	341.8	-9597.9
10	167	2622.6	272.0	-780.7	-367.8	-2190.5	1761.1
	184	-2530.8	-272.0	780.7	367.8	4798.2	-852.7
11	167	2576.3	466.3	420.2	372.7	-334.5	1117.7

Comb.	Nodo	N [kg]	T1-2 [kg]	T1-3 [kg]	Mt [kgm]	M1-3 [kgm]	M1-2 [kgm]
	184	-2484.4	-466.3	-420.2	-372.7	-1069.1	439.8
12	167	2119.9	-28.9	141.7	-292.0	52.4	3006.3
	184	-2028.1	-87.8	-141.7	292.0	-525.9	-2908.0
13	167	471.2	326.8	456.5	229.8	-23.5	1280.5
	184	-379.4	-326.8	-456.5	-229.8	-1501.1	-189.1
14	167	2787.5	402.5	145.6	223.1	-726.8	1086.5
	184	-2695.6	-402.5	-145.6	-223.1	240.4	257.8
15	167	-1833.4	-1835.6	-681.2	-2970.1	1843.0	11910.9
	184	1925.3	1252.4	681.2	2970.1	432.4	-17067.8
16	167	-1851.2	290.9	72.3	-807.8	6404.1	1511.2
	184	1943.0	-290.9	-72.3	807.8	-6262.3	-508.3
17	167	-1310.2	-137.3	77.7	-1592.5	3431.0	4043.5
	184	1402.0	137.3	-77.7	1592.5	-1084.9	-4310.9
1	2	7733.7	-1283.0	8.7	-0.1	-35.4	-2298.3
	35	-6145.3	-1530.2	-8.7	0.1	-42.9	3404.5
2	2	6539.9	-2134.3	11.6	-0.1	-52.2	-3793.7
	35	-4951.5	-2554.4	-11.6	0.1	-51.5	5673.6
3	2	8358.0	-1284.0	5.3	-0.1	-25.3	-2303.8
	35	-6769.6	-1529.2	-5.3	0.1	-22.4	3400.9
4	2	5493.7	-2.1	-134.0	0.2	655.6	-80.3
	35	-3905.3	2.1	134.0	-0.2	543.3	61.6
5	2	5856.0	-3.4	85.7	-0.1	-407.7	-44.2
	35	-4634.2	3.4	-85.7	0.1	-359.6	6.6
6	2	4545.0	-25.0	43.6	-0.2	-203.0	-249.6
	35	-3323.2	25.0	-43.6	0.2	-187.3	-54.6
7	2	5654.7	-855.4	6.5	-0.1	-25.7	-1534.1
	35	-4432.9	-1020.1	-6.5	0.1	-32.5	2271.2
8	2	4858.9	-1422.9	8.4	-0.1	-37.0	-2531.0
	35	-3637.0	-1702.9	-8.4	0.1	-38.3	3783.9
9	2	6070.9	-856.1	4.2	-0.1	-19.0	-1537.7
	35	-4849.0	-1019.4	-4.2	0.1	-18.9	2268.8
10	2	4161.4	-1.4	-88.6	0.1	434.9	-55.4
	35	-2939.5	1.4	88.6	-0.1	358.2	42.6
11	2	6572.8	-4.0	1.2	-0.0	-2.2	-37.0
	35	-5351.0	4.0	-1.2	0.0	-8.2	1.4
12	2	6251.8	-287.8	2.1	-0.0	-7.8	-536.0
	35	-5029.9	-337.3	-2.1	0.0	-11.3	757.6
13	2	5015.2	-1.9	4.5	-0.0	-13.2	-24.2
	35	-3793.4	1.9	-4.5	0.0	-27.4	7.6
14	2	6112.3	-3.5	-17.3	0.0	86.5	-40.9
	35	-4890.4	3.5	17.3	-0.0	68.0	9.3
15	2	4442.7	-1422.2	10.7	-0.1	-43.7	-2527.4
	35	-3220.8	-1703.6	-10.7	0.1	-52.0	3786.4
16	2	5956.8	-3.6	92.2	-0.1	-439.4	-46.8
	35	-4735.0	3.6	-92.2	0.1	-386.2	6.6
17	2	4534.9	-27.8	46.7	-0.2	-218.3	-271.5

Comb.	Nodo	N [kg]	T1-2 [kg]	T1-3 [kg]	Mt [kgm]	M1-3 [kgm]	M1-2 [kgm]
	35	-3313.0	27.8	-46.7	0.2	-200.1	-63.4
1	35	5888.2	-1852.3	-65.3	-7.0	6.0	-3544.9
	82	-5342.6	830.8	-77.7	7.0	-26.1	-815.1
2	35	4747.6	-3088.5	-78.5	-11.5	32.0	-5900.9
	82	-4201.9	1386.0	-64.5	11.5	-9.3	-1370.2
3	35	6520.6	-1851.1	-86.9	-6.9	56.5	-3540.3
	82	-5975.0	829.5	-56.2	6.9	-6.7	-815.6
4	35	4010.6	-28.8	-577.6	-0.1	1189.5	-94.8
	82	-3464.9	28.8	434.5	0.1	455.1	1.3
5	35	4308.0	-2.1	268.2	-0.3	-736.1	-16.8
	82	-3888.3	2.1	-378.2	0.3	-354.9	2.8
6	35	3155.4	-25.9	-10.0	-0.5	-77.9	-85.7
	82	-2735.7	25.9	-100.1	0.5	-200.7	-49.9
7	35	4247.2	-1235.1	-47.1	-4.7	-2.1	-2365.3
	82	-3827.4	554.0	-62.9	4.7	-23.5	-542.0
8	35	3486.8	-2059.2	-55.9	-7.7	15.3	-3935.9
	82	-3067.0	924.2	-54.1	7.7	-12.4	-912.0
9	35	4668.8	-1234.2	-61.5	-4.6	31.6	-2362.2
	82	-4249.0	553.2	-48.6	4.6	-10.6	-542.4
10	35	2995.4	-19.4	-388.6	-0.0	786.9	-65.2
	82	-2575.7	19.4	278.6	0.0	297.3	2.3
11	35	5152.8	1.6	-50.2	-0.1	9.7	-7.0
	82	-4733.1	-1.6	-59.9	0.1	-25.5	12.0
12	35	4845.6	-410.5	-54.4	-1.6	17.9	-792.2
	82	-4425.8	183.5	-55.7	1.6	-20.1	-172.9
13	35	3632.0	-0.4	-29.6	-0.1	-38.8	-12.8
	82	-3212.2	0.4	-80.4	0.1	-43.8	11.7
14	35	4747.3	-2.5	-120.9	-0.1	172.3	-18.1
	82	-4327.5	2.5	10.8	0.1	41.8	9.9
15	35	3065.2	-2060.1	-41.6	-7.7	-18.4	-3939.1
	82	-2645.4	925.0	-68.5	7.7	-25.3	-911.7
16	35	4397.3	-2.1	291.5	-0.3	-790.7	35.6
	82	-3977.5	2.1	-401.5	0.3	-379.6	0.7
17	35	3144.6	-28.4	-9.0	-0.5	-79.6	80.1
	82	-2724.9	28.4	-101.0	0.5	-213.1	-60.9
1	82	5266.6	-734.3	-11.7	-6.4	11.0	804.9
	103	-5160.7	734.3	11.7	6.4	0.7	-1539.1
2	82	4130.2	-1224.4	-7.7	-10.6	-3.4	1353.0
	103	-4024.3	1224.4	7.7	10.6	11.1	-2577.4
3	82	5899.4	-733.0	-11.2	-6.3	4.2	805.5
	103	-5793.5	733.0	11.2	6.3	6.9	-1538.4
4	82	3366.2	-20.5	-65.0	-0.0	-175.6	-2.7
	103	-3260.3	20.5	65.0	0.0	240.6	-17.8
5	82	3844.7	-1.8	43.4	-0.3	132.0	-2.7
	103	-3763.2	1.8	-43.4	0.3	-178.9	1.3

Comb.	Nodo	N [kg]	T1-2 [kg]	T1-3 [kg]	Mt [kgm]	M1-3 [kgm]	M1-2 [kgm]
6	82	2682.0	-18.7	-14.4	-0.4	73.2	49.7
	103	-2600.4	18.7	14.4	0.4	-97.3	-58.7
7	82	3770.0	-489.7	-8.7	-4.3	10.4	535.2
	103	-3688.4	489.7	8.7	4.3	-1.6	-1024.9
8	82	3012.4	-816.5	-6.1	-7.1	0.8	900.6
	103	-2930.8	816.5	6.1	7.1	5.3	-1717.1
9	82	4191.8	-488.9	-8.4	-4.2	5.9	535.6
	103	-4110.3	488.9	8.4	4.2	2.5	-1024.5
10	82	2503.0	-13.9	-44.3	-0.0	-114.0	-3.2
	103	-2421.5	13.9	44.3	0.0	158.3	-10.7
11	82	4674.3	0.9	-10.8	-0.0	18.6	-11.9
	103	-4592.8	-0.9	10.8	0.0	-7.8	12.8
12	82	4368.2	-162.4	-9.7	-1.4	14.0	170.8
	103	-4286.6	162.4	9.7	1.4	-4.4	-333.2
13	82	3156.5	-0.9	-9.4	-0.1	23.7	-11.6
	103	-3075.0	0.9	9.4	0.1	-14.3	10.7
14	82	4266.3	-1.9	-17.3	-0.0	-8.9	-10.0
	103	-4184.8	1.9	17.3	0.0	26.2	8.1
15	82	2590.5	-817.3	-6.4	-7.1	5.3	900.2
	103	-2509.0	817.3	6.4	7.1	1.2	-1717.6
16	82	3934.9	-1.7	48.4	-0.3	142.2	-0.6
	103	-3853.3	1.7	-48.4	0.3	-192.1	-0.9
17	82	2671.3	-20.4	-14.8	-0.5	78.1	60.7
	103	-2589.7	20.4	14.8	0.5	-104.0	-69.8
1	103	5049.0	-498.2	15.1	-4.7	-14.2	1531.0
	125	-4943.0	498.2	-15.1	4.7	-0.9	-2029.2
2	103	3916.7	-830.2	17.0	-7.8	-24.5	2563.7
	125	-3810.8	830.2	-17.0	7.8	7.5	-3393.9
3	103	5682.0	-496.9	2.9	-4.7	-8.1	1530.3
	125	-5576.1	496.9	-2.9	4.7	5.1	-2027.2
4	103	3129.7	-13.6	-181.5	-0.0	5.6	16.6
	125	-3023.8	13.6	181.5	0.0	175.9	-30.2
5	103	3689.7	-2.1	142.3	-0.3	34.8	-1.1
	125	-3608.2	2.1	-142.3	0.3	-122.8	-0.2
6	103	2518.9	-16.5	15.9	-0.4	22.5	58.6
	125	-2437.4	16.5	-15.9	0.4	-19.8	-67.8
7	103	3603.4	-332.4	12.5	-3.1	-10.0	1019.5
	125	-3521.9	332.4	-12.5	3.1	-2.5	-1351.9
8	103	2848.6	-553.7	13.8	-5.2	-16.9	1708.0
	125	-2767.1	553.7	-13.8	5.2	3.1	-2261.7
9	103	4025.5	-331.5	4.4	-3.1	-5.9	1019.1
	125	-3944.0	331.5	-4.4	3.1	1.5	-1350.6
10	103	2324.0	-9.4	-118.6	-0.0	3.2	9.9
	125	-2242.4	9.4	118.6	0.0	115.4	-19.3
11	103	4506.5	0.3	2.3	-0.0	4.3	-12.6
	125	-4424.9	-0.3	-2.3	0.0	-6.6	12.9

Comb.	Nodo	N [kg]	T1-2 [kg]	T1-3 [kg]	Mt [kgm]	M1-3 [kgm]	M1-2 [kgm]
12	103	4201.4	-110.4	3.0	-1.0	0.9	331.5
	125	-4119.9	110.4	-3.0	1.0	-3.9	-441.9
13	103	2991.8	-1.4	15.1	-0.1	-2.4	-10.6
	125	-2910.3	1.4	-15.1	0.1	-12.8	9.2
14	103	4096.5	-1.5	-23.5	0.0	4.9	-8.1
	125	-4015.0	1.5	23.5	-0.0	18.6	6.6
15	103	2426.6	-554.6	21.9	-5.3	-21.0	1708.4
	125	-2345.1	554.6	-21.9	5.3	-0.9	-2263.0
16	103	3780.7	-2.1	152.7	-0.3	41.3	1.0
	125	-3699.1	2.1	-152.7	0.3	-131.5	-2.2
17	103	2508.4	-17.9	15.6	-0.4	26.2	69.7
	125	-2426.8	17.9	-15.6	0.4	-20.2	-78.8
1	125	4831.1	-275.2	25.8	-2.5	-12.4	2023.9
	146	-4725.1	275.2	-25.8	2.5	-13.4	-2299.1
2	125	3702.9	-457.8	31.5	-4.2	-22.6	3385.0
	146	-3597.0	457.8	-31.5	4.2	-8.9	-3842.8
3	125	5464.4	-273.9	12.6	-2.5	-5.6	2021.9
	146	-5358.4	273.9	-12.6	2.5	-7.0	-2295.8
4	125	2893.6	-8.2	-206.9	0.0	55.7	29.1
	146	-2787.6	8.2	206.9	-0.0	151.2	-37.2
5	125	3534.4	-2.5	167.1	-0.3	-47.8	0.3
	146	-3452.9	2.5	-167.1	0.3	-123.9	-1.8
6	125	2355.9	-14.0	22.1	-0.4	0.1	67.8
	146	-2274.4	14.0	-22.1	0.4	-22.5	-75.7
7	125	3436.8	-183.8	20.2	-1.7	-8.9	1348.4
	146	-3355.3	183.8	-20.2	1.7	-11.4	-1532.2
8	125	2684.7	-305.5	24.1	-2.8	-15.7	2255.8
	146	-2603.2	305.5	-24.1	2.8	-8.4	-2561.3
9	125	3859.0	-182.9	11.4	-1.7	-4.4	1347.1
	146	-3777.4	182.9	-11.4	1.7	-7.1	-1530.0
10	125	2145.1	-5.7	-134.9	-0.0	36.5	18.5
	146	-2063.6	5.7	134.9	0.0	98.4	-24.3
11	125	4338.5	-0.3	5.6	0.0	5.5	-12.8
	146	-4257.0	0.3	-5.6	-0.0	-11.0	12.4
12	125	4034.5	-61.2	7.5	-0.6	2.1	440.8
	146	-3953.0	61.2	-7.5	0.6	-9.6	-502.0
13	125	2827.1	-1.8	19.5	-0.1	-2.3	-9.1
	146	-2745.6	1.8	-19.5	0.1	-17.3	7.3
14	125	3926.6	-1.2	-24.3	0.0	12.5	-6.7
	146	-3845.1	1.2	24.3	-0.0	11.7	5.4
15	125	2262.5	-306.4	32.9	-2.8	-20.2	2257.1
	146	-2181.0	306.4	-32.9	2.8	-12.7	-2563.5
16	125	3626.0	-2.5	179.1	-0.3	-65.4	2.3
	146	-3544.5	2.5	-179.1	0.3	-132.2	-3.6
17	125	2345.4	-15.2	21.9	-0.4	-41.7	78.9
	146	-2263.9	15.2	-21.9	0.4	-22.8	-86.6

Comb.	Nodo	N [kg]	T1-2 [kg]	T1-3 [kg]	Mt [kgm]	M1-3 [kgm]	M1-2 [kgm]
1	146	4612.5	-59.8	18.4	0.0	1.8	2297.2
	154	-4506.5	59.8	-18.4	-0.0	-20.2	-2357.0
2	146	3488.3	-97.8	30.0	0.1	-6.1	3839.6
	154	-3382.3	97.8	-30.0	-0.1	-23.9	-3937.4
3	146	5245.8	-58.4	24.0	0.1	8.6	2293.9
	154	-5139.8	58.4	-24.0	-0.1	-32.6	-2352.3
4	146	2655.4	-4.1	-114.6	0.0	72.6	36.2
	154	-2549.5	4.1	114.6	-0.0	42.0	-40.4
5	146	3379.4	2.6	102.2	-0.3	-47.6	2.0
	154	-3297.9	-2.6	-102.2	0.3	-69.5	-3.8
6	146	2192.6	7.4	-3.2	-0.4	-27.8	75.9
	154	-2111.0	-7.4	3.2	0.4	-2.7	-81.3
7	146	3269.6	-40.2	12.0	0.0	1.3	1530.9
	154	-3188.1	40.2	-12.0	-0.0	-13.3	-1571.1
8	146	2520.1	-65.6	19.6	0.0	-3.9	2559.2
	154	-2438.6	65.6	-19.6	-0.0	-15.7	-2624.7
9	146	3691.8	-39.3	15.6	0.1	5.9	1528.7
	154	-3610.3	39.3	-15.6	-0.1	-21.5	-1568.0
10	146	1964.9	-3.1	-76.7	-0.0	48.5	23.6
	154	-1883.4	3.1	76.7	0.0	28.2	-26.7
11	146	4170.1	-1.1	4.3	0.0	12.9	-12.4
	154	-4088.6	1.1	-4.3	-0.0	-17.2	11.3
12	146	3867.2	-13.8	8.1	0.0	10.3	501.6
	154	-3785.6	13.8	-8.1	-0.0	-18.5	-515.4
13	146	2662.1	-2.3	-1.4	-0.0	4.4	-7.2
	154	-2580.6	2.3	1.4	0.0	-3.1	4.9
14	146	3756.1	-1.3	-11.1	0.0	20.8	-5.5
	154	-3674.6	1.3	11.1	-0.0	-9.7	4.2
15	146	2097.9	-66.5	15.9	0.0	-8.5	2561.3
	154	-2016.4	66.5	-15.9	-0.0	-7.5	-2627.8
16	146	3471.8	3.3	110.9	-0.3	-53.2	3.7
	154	-3390.3	-3.3	-110.9	0.3	-75.1	-5.3
17	146	2182.1	8.7	-3.4	-0.5	-31.1	86.7
	154	-2100.6	-8.7	3.4	0.5	-2.9	-91.7
1	154	4428.3	-2.6	-6.4	4.5	12.3	2358.7
	185	-3409.6	-1801.6	6.4	-4.5	24.5	2804.5
2	154	3307.9	-1.5	-4.3	7.6	11.9	3940.3
	185	-2289.1	-3005.6	4.3	-7.6	13.0	4681.6
3	154	5061.7	-1.2	-23.3	4.6	39.5	2354.1
	185	-4042.9	-1803.0	23.3	-4.6	94.3	2816.9
4	154	2448.7	-1.5	-147.0	0.0	183.7	39.5
	185	-1430.0	1.5	147.0	-0.0	660.2	-48.2
5	154	3252.5	6.6	79.5	-0.3	-102.8	3.9
	185	-2468.9	-6.6	-79.5	0.3	-370.6	7.7
6	154	2056.2	17.5	7.6	-0.5	-66.3	81.6

Comb.	Nodo	N [kg]	T1-2 [kg]	T1-3 [kg]	Mt [kgm]	M1-3 [kgm]	M1-2 [kgm]
	185	-1272.6	-17.5	-7.6	0.5	-31.9	18.9
7	154	3129.0	-2.1	-2.9	3.0	5.9	1572.3
	185	-2345.4	-1200.7	2.9	-3.0	10.6	1867.9
8	154	2382.0	-1.3	-1.5	5.0	5.6	2626.7
	185	-1598.4	-2003.4	1.5	-5.0	3.0	3119.3
9	154	3551.2	-1.2	-14.2	3.0	24.0	1569.2
	185	-2767.6	-1201.6	14.2	-3.0	57.2	1876.2
10	154	1809.3	-1.4	-96.6	0.0	120.2	26.1
	185	-1025.6	1.4	96.6	-0.0	434.4	-33.9
11	154	4028.5	-1.9	-15.2	0.0	23.0	-11.3
	185	-3244.9	1.9	15.2	-0.0	64.0	0.3
12	154	3726.5	-1.6	-14.6	1.0	23.0	515.8
	185	-2942.9	-399.4	14.6	-1.0	60.7	625.8
13	154	2524.0	-2.9	4.2	-0.0	-7.8	-4.8
	185	-1740.3	2.9	-4.2	0.0	-16.6	-11.6
14	154	3611.9	-1.6	-33.6	0.0	45.9	-4.3
	185	-2828.3	1.6	33.6	-0.0	147.0	-4.8
15	154	1959.8	-2.2	9.8	5.0	-12.5	2629.8
	185	-1176.2	-2002.5	-9.8	-5.0	-43.6	3111.0
16	154	3345.8	7.7	85.6	-0.3	-111.4	5.4
	185	-2562.2	-7.7	-85.6	0.3	-399.3	10.0
17	154	2045.9	20.2	7.5	-0.5	-71.2	92.0
	185	-1262.2	-20.2	-7.5	0.5	-31.4	23.8
1	3	10586.6	-1153.7	0.7	-0.1	-10.7	-1934.4
	36	-9946.3	-1661.3	-0.7	0.1	4.5	4205.8
2	3	9447.3	-1922.0	5.5	-0.1	-33.1	-3195.3
	36	-8807.0	-2769.5	-5.5	0.1	-16.4	6988.0
3	3	12526.6	-1155.5	0.8	-0.1	-11.0	-1942.3
	36	-11886.3	-1659.5	-0.8	0.1	4.0	4197.7
4	3	10071.5	-5.4	-136.1	-0.0	661.2	-81.3
	36	-9431.2	5.4	136.1	0.0	556.9	32.6
5	3	4946.7	0.2	73.5	-0.1	-371.4	-39.5
	36	-4454.1	-0.2	-73.5	0.1	-286.3	87.7
6	3	4841.3	-18.4	33.3	-0.2	-172.2	-233.9
	36	-4348.8	18.4	-33.3	0.2	-125.6	145.8
7	3	7540.1	-768.8	0.1	-0.1	-6.2	-1290.5
	36	-7047.6	-1107.9	-0.1	0.1	5.2	2808.0
8	3	6780.6	-1281.0	3.3	-0.1	-21.1	-2131.2
	36	-6288.1	-1846.7	-3.3	0.1	-8.8	4662.7
9	3	8833.5	-770.0	0.2	-0.1	-6.4	-1295.8
	36	-8341.0	-1106.7	-0.2	0.1	4.8	2802.5
10	3	7196.7	-3.3	-91.1	-0.0	441.7	-55.1
	36	-6704.2	3.3	91.1	0.0	373.4	25.8
11	3	9003.9	-1.1	-4.1	-0.0	13.5	-30.4
	36	-8511.3	1.1	4.1	0.0	23.1	20.2
12	3	8731.8	-257.3	-2.5	-0.0	6.3	-451.2

Comb.	Nodo	N [kg]	T1-2 [kg]	T1-3 [kg]	Mt [kgm]	M1-3 [kgm]	M1-2 [kgm]
	36	-8239.2	-368.2	2.5	0.0	16.4	947.6
13	3	5685.6	1.4	-3.5	-0.0	10.7	-16.3
	36	-5193.1	-1.4	3.5	0.0	20.2	28.6
14	3	8815.0	-1.8	-21.4	-0.0	98.9	-36.0
	36	-8322.4	1.8	21.4	0.0	92.8	20.2
15	3	5487.3	-1279.8	3.3	-0.1	-20.9	-2125.9
	36	-4994.7	-1847.9	-3.3	0.1	-8.4	4668.2
16	3	4950.3	-0.2	79.7	-0.1	-402.3	-42.5
	36	-4457.8	0.2	-79.7	0.1	-311.1	95.2
17	3	4835.5	-21.5	36.3	-0.2	-187.1	-256.0
	36	-4342.9	21.5	-36.3	0.2	-137.5	159.6
1	36	10113.3	-2239.8	-115.8	-0.5	121.0	-4440.1
	83	-9567.5	1217.6	-27.3	0.5	22.8	-1178.1
2	36	8955.7	-3729.3	-116.3	-0.7	116.4	-7382.2
	83	-8409.9	2025.7	-26.8	0.7	29.1	-1969.7
3	36	12116.9	-2238.0	-114.7	-0.5	118.3	-4430.7
	83	-11571.1	1215.9	-28.4	0.5	22.0	-1181.9
4	36	9593.5	-6.7	-571.3	0.2	1190.3	-21.1
	83	-9047.7	6.7	428.2	-0.2	434.0	-0.6
5	36	4476.4	-24.4	233.7	-0.3	-664.0	-91.2
	83	-4056.5	24.4	-343.8	0.3	-275.7	-0.5
6	36	4374.0	-45.3	83.0	-0.4	-312.8	-154.5
	83	-3954.1	45.3	-193.1	0.4	-136.8	-66.4
7	36	7158.3	-1493.8	-87.3	-0.3	89.7	-2964.0
	83	-6738.5	812.4	-22.8	0.3	15.2	-783.5
8	36	6386.6	-2486.8	-87.7	-0.4	86.7	-4925.4
	83	-5966.7	1351.1	-22.4	0.4	19.4	-1311.3
9	36	8494.0	-1492.6	-86.6	-0.3	88.0	-2957.7
	83	-8074.2	811.2	-23.5	0.3	14.6	-786.0
10	36	6811.8	-5.1	-391.0	0.1	802.6	-18.0
	83	-6391.9	5.1	280.9	-0.1	289.3	1.5
11	36	8659.2	-2.9	-83.1	-0.1	85.3	-15.9
	83	-8239.3	2.9	-27.0	0.1	5.8	6.5
12	36	8383.6	-499.4	-83.6	-0.2	84.6	-996.5
	83	-7963.7	272.3	-26.5	0.2	8.2	-257.5
13	36	5242.9	-4.5	-80.4	-0.1	78.9	-26.3
	83	-4823.0	4.5	-29.7	0.1	3.5	11.7
14	36	8468.6	-3.1	-144.3	-0.1	227.8	-15.1
	83	-8048.8	3.1	34.2	0.1	62.2	5.1
15	36	5050.8	-2488.0	-88.4	-0.4	88.5	-4931.7
	83	-4631.0	1352.3	-21.7	0.4	19.9	-1308.8
16	36	4479.7	-26.4	258.8	-0.3	-723.6	-99.0
	83	-4059.8	26.4	-368.9	0.3	-298.2	-3.7
17	36	4368.0	-49.0	96.2	-0.5	-344.5	-168.8
	83	-3948.1	49.0	-206.3	0.5	-148.2	-81.6

Comb.	Nodo	N [kg]	T1-2 [kg]	T1-3 [kg]	Mt [kgm]	M1-3 [kgm]	M1-2 [kgm]
1	83	9523.3	-1030.9	-38.5	-0.5	8.9	1166.0
	104	-9417.3	1030.9	38.5	0.5	29.6	-2196.9
2	83	8367.4	-1715.2	-32.2	-0.8	-3.3	1949.3
	104	-8261.4	1715.2	32.2	0.8	35.5	-3664.6
3	83	11536.0	-1029.2	-37.7	-0.6	9.2	1169.9
	104	-11430.0	1029.2	37.7	0.6	28.5	-2199.1
4	83	9002.3	-6.7	-225.3	0.2	-77.6	1.4
	104	-8896.3	6.7	225.3	-0.2	302.9	-8.1
5	83	4012.0	-18.2	101.9	-0.3	86.5	0.5
	104	-3930.5	18.2	-101.9	0.3	-176.7	-6.0
6	83	3910.4	-32.3	41.6	-0.4	50.4	66.3
	104	-3828.9	32.3	-41.6	0.4	-82.4	-79.8
7	83	6703.0	-687.8	-29.4	-0.4	8.4	775.5
	104	-6621.5	687.8	29.4	0.4	20.9	-1463.3
8	83	5932.4	-1144.1	-25.2	-0.5	0.3	1297.7
	104	-5850.8	1144.1	25.2	0.5	24.8	-2441.7
9	83	8044.7	-686.7	-28.9	-0.4	8.7	778.1
	104	-7963.2	686.7	28.9	0.4	20.2	-1464.7
10	83	6355.6	-5.0	-154.0	0.1	-49.2	-0.9
	104	-6274.1	5.0	154.0	-0.1	203.1	-4.1
11	83	8207.8	-2.2	-33.0	-0.1	20.5	-6.2
	104	-8126.3	2.2	33.0	0.1	12.6	3.9
12	83	7932.8	-230.4	-31.2	-0.2	16.4	255.0
	104	-7851.3	230.4	31.2	0.2	14.7	-485.4
13	83	4781.2	-4.0	-31.1	-0.1	19.7	-11.6
	104	-4699.7	4.0	31.1	0.1	11.4	7.6
14	83	8017.4	-2.6	-56.9	-0.1	6.5	-4.7
	104	-7935.9	2.6	56.9	0.1	50.4	2.1
15	83	4590.6	-1145.2	-25.7	-0.5	0.1	1295.1
	104	-4509.1	1145.2	25.7	0.5	25.5	-2440.3
16	83	4015.3	-19.7	113.0	-0.3	94.3	3.7
	104	-3933.8	19.7	-113.0	0.3	-191.8	-9.3
17	83	3904.5	-34.8	47.7	-0.5	54.5	81.5
	104	-3823.0	34.8	-47.7	0.5	-90.0	-95.0
1	104	9340.8	-679.1	-13.6	-0.6	-0.5	2187.8
	126	-9234.9	679.1	13.6	0.6	14.0	-2867.0
2	104	8186.2	-1129.6	-4.7	-0.9	-13.8	3649.1
	126	-8080.3	1129.6	4.7	0.9	18.6	-4778.6
3	104	11362.5	-677.3	-12.9	-0.6	0.1	2190.1
	126	-11256.5	677.3	12.9	0.6	12.8	-2867.4
4	104	8817.5	-5.9	-218.3	0.2	15.9	8.9
	126	-8711.5	5.9	218.3	-0.2	202.3	-14.8
5	104	3860.7	-14.6	105.2	-0.3	49.3	6.1
	126	-3779.2	14.6	-105.2	0.3	-128.5	-10.0
6	104	3759.9	-24.8	-18.6	-0.5	36.9	79.7
	126	-3678.4	24.8	18.6	0.5	-63.2	-91.1

Comb.	Nodo	N [kg]	T1-2 [kg]	T1-3 [kg]	Mt [kgm]	M1-3 [kgm]	M1-2 [kgm]
7	104	6561.1	-453.3	-11.0	-0.4	1.1	1457.2
	126	-6479.5	453.3	11.0	0.4	9.9	-1910.5
8	104	5791.3	-753.6	-5.1	-0.6	-7.8	2431.4
	126	-5709.8	753.6	5.1	0.6	12.9	-3185.0
9	104	7908.8	-452.1	-10.5	-0.4	1.5	1458.8
	126	-7827.3	452.1	10.5	0.4	9.0	-1910.8
10	104	6212.1	-4.5	-147.4	0.1	12.0	4.6
	126	-6130.6	4.5	147.4	-0.1	135.4	-9.1
11	104	8069.8	-1.7	-17.8	-0.1	13.9	-3.6
	126	-7988.3	1.7	17.8	0.1	3.9	1.9
12	104	7795.3	-151.8	-15.0	-0.2	9.6	483.6
	126	-7713.8	151.8	15.0	0.2	5.5	-635.4
13	104	4632.7	-3.7	-16.5	-0.1	12.1	-7.5
	126	-4551.2	3.7	16.5	0.1	4.5	3.8
14	104	7879.5	-2.0	-43.5	-0.1	13.6	-1.7
	126	-7798.0	2.0	43.5	0.1	30.0	-0.2
15	104	4443.6	-754.8	-5.5	-0.6	-8.3	2429.9
	126	-4362.0	754.8	5.5	0.6	13.8	-3184.7
16	104	3864.0	-15.8	143.4	-0.3	46.0	9.3
	126	-3782.5	15.8	-143.4	0.3	-119.2	-13.0
17	104	3754.0	-26.8	73.7	-0.5	6.2	94.9
	126	-3672.5	26.8	-73.7	0.5	-2.3	-105.9
1	126	9158.4	-321.2	-11.0	-0.6	15.3	2862.0
	147	-9052.4	321.2	11.0	0.6	-4.3	-3183.2
2	126	8005.2	-533.6	1.7	-0.9	1.5	4770.1
	147	-7899.2	533.6	-1.7	0.9	-3.2	-5303.7
3	126	11189.4	-319.1	-12.6	-0.6	16.3	2862.6
	147	-11083.5	319.1	12.6	0.6	-3.7	-3181.7
4	126	8631.8	-4.2	-265.6	0.2	102.0	15.5
	147	-8525.8	4.2	265.6	-0.2	163.6	-19.8
5	126	3709.3	-11.1	166.0	-0.3	-42.1	10.1
	147	-3627.8	11.1	-166.0	0.3	-110.8	-48.6
6	126	3609.1	-17.9	85.5	-0.5	-18.1	91.0
	147	-3527.6	17.9	-85.5	0.5	-9.5	-108.3
7	126	6419.1	-214.7	-8.8	-0.4	12.4	1907.2
	147	-6337.6	214.7	8.8	0.4	-3.6	-2121.9
8	126	5650.3	-356.3	-0.4	-0.6	3.2	3179.3
	147	-5568.8	356.3	0.4	0.6	-2.9	-3535.6
9	126	7773.1	-213.3	-9.9	-0.4	13.1	1907.6
	147	-7691.6	213.3	9.9	0.4	-3.2	-2120.9
10	126	6068.1	-3.4	-178.6	0.1	70.3	9.6
	147	-5986.5	3.4	178.6	-0.1	108.3	-13.0
11	126	7932.0	-1.0	-20.3	-0.1	24.8	-1.6
	147	-7850.5	1.0	20.3	0.1	-4.4	0.6
12	126	7658.1	-71.8	-16.3	-0.2	20.4	634.6
	147	-7576.6	71.8	16.3	0.2	-4.1	-706.4

Comb.	Nodo	N [kg]	T1-2 [kg]	T1-3 [kg]	Mt [kgm]	M1-3 [kgm]	M1-2 [kgm]
13	126	4483.9	-3.4	-15.6	-0.1	20.8	-3.7
	147	-4402.4	3.4	15.6	0.1	-5.2	0.3
14	126	7741.6	-1.2	-52.0	-0.1	33.8	0.6
	147	-7660.1	1.2	52.0	0.1	18.2	-1.9
15	126	4296.3	-357.6	0.7	-0.6	2.6	3178.9
	147	-4214.8	357.6	-0.7	0.6	-3.3	-3536.5
16	126	3712.6	-12.0	181.1	-0.3	-48.8	13.0
	147	-3631.1	12.0	-181.1	0.3	-119.2	-15.5
17	126	3603.2	-19.6	94.0	-0.5	-22.1	105.8
	147	-3521.7	19.6	-94.0	0.5	-9.8	-111.5
1	147	8975.8	40.9	-15.8	-0.7	36.7	3183.0
	155	-8869.8	-40.9	15.8	0.7	-20.9	-3142.1
2	147	7823.9	68.9	2.9	-1.0	24.9	5303.0
	155	-7717.9	-68.9	-2.9	1.0	-27.8	-5234.1
3	147	11016.6	43.2	-19.6	-0.7	35.9	3181.7
	155	-10910.6	-43.2	19.6	0.7	-16.3	-3138.5
4	147	8445.4	-1.5	-213.4	0.1	136.7	20.5
	155	-8339.5	1.5	213.4	-0.1	76.7	-22.0
5	147	3557.4	1.1	120.8	-0.3	-30.9	48.6
	155	-3475.9	-1.1	-120.8	0.3	-94.5	-14.9
6	147	3457.7	6.5	58.1	-0.5	-4.7	108.3
	155	-3376.2	-6.5	-58.1	0.5	-55.4	-98.1
7	147	6276.9	26.7	-12.9	-0.4	28.4	2121.8
	155	-6195.4	-26.7	12.9	0.4	-15.5	-2095.1
8	147	5509.0	45.4	-0.4	-0.7	20.5	3535.1
	155	-5427.5	-45.4	0.4	0.7	-20.1	-3489.8
9	147	7637.5	28.3	-15.4	-0.4	27.9	2120.9
	155	-7556.0	-28.3	15.4	0.4	-12.4	-2092.7
10	147	5923.4	-1.6	-144.6	0.1	95.1	13.4
	155	-5841.9	1.6	144.6	-0.1	49.6	-15.0
11	147	7794.2	-0.1	-31.3	-0.1	36.8	-0.2
	155	-7712.7	0.1	31.3	0.1	-5.5	0.1
12	147	7520.8	9.3	-25.3	-0.2	33.2	706.6
	155	-7439.3	-9.3	25.3	0.2	-7.8	-697.3
13	147	4334.7	-3.0	-23.4	-0.1	33.8	-0.2
	155	-4253.2	3.0	23.4	0.1	-10.4	-2.8
14	147	7603.7	-0.1	-54.2	-0.1	48.1	2.3
	155	-7522.2	0.1	54.2	0.1	6.1	-2.4
15	147	4148.5	43.8	2.1	-0.7	21.0	3536.0
	155	-4067.0	-43.8	-2.1	0.7	-23.1	-3492.2
16	147	3560.8	2.0	132.7	-0.3	-37.5	15.5
	155	-3479.2	-2.0	-132.7	0.3	-101.1	-16.9
17	147	3451.9	8.4	64.8	-0.5	-8.6	111.5
	155	-3370.4	-8.4	-64.8	0.5	-59.0	-110.4
1	155	8827.3	246.2	-35.7	-0.6	60.8	3146.5

Comb.	Nodo	N [kg]	T1-2 [kg]	T1-3 [kg]	Mt [kgm]	M1-3 [kgm]	M1-2 [kgm]
	186	-7808.3	-2051.5	35.7	0.6	144.0	3448.0
2	155	7677.1	409.7	-32.0	-1.0	56.2	5241.2
	186	-6658.2	-3418.6	32.0	1.0	127.3	5746.2
3	155	10879.1	248.9	-33.5	-0.6	55.5	3143.1
	186	-9860.1	-2054.2	33.5	0.6	136.8	3467.0
4	155	8293.7	2.3	-180.3	0.1	231.6	22.7
	186	-7274.8	-2.3	180.3	-0.1	803.6	-9.5
5	155	3430.6	9.3	68.4	-0.2	-57.6	15.0
	186	-2646.7	-9.3	-68.4	0.2	-335.6	10.9
6	155	3331.5	24.7	26.3	-0.4	-12.6	98.2
	186	-2547.7	-24.7	-26.3	0.4	-138.7	44.9
7	155	6160.9	163.6	-26.9	-0.4	46.0	2098.0
	186	-5377.1	-1367.1	26.9	0.4	108.4	2295.2
8	155	5394.1	272.6	-24.4	-0.7	42.9	3494.4
	186	-4610.3	-2278.5	24.4	0.7	97.3	3827.3
9	155	7528.7	165.4	-25.4	-0.4	42.5	2095.7
	186	-6744.9	-1368.9	25.4	0.4	103.6	2307.9
10	155	5805.2	1.0	-123.3	0.1	159.8	15.4
	186	-5021.4	-1.0	123.3	-0.1	548.1	-9.8
11	155	7683.0	1.3	-26.9	-0.0	43.7	0.3
	186	-6899.2	-1.3	26.9	0.0	110.8	7.0
12	155	7410.3	55.8	-25.9	-0.2	42.5	698.6
	186	-6626.4	-457.0	25.9	0.2	106.3	773.4
13	155	4210.8	-2.4	-26.3	-0.1	44.9	2.9
	186	-3427.0	2.4	26.3	0.1	106.3	-16.7
14	155	7492.5	1.5	-45.7	-0.0	65.9	2.8
	186	-6708.6	-1.5	45.7	0.0	196.5	5.9
15	155	4026.3	270.8	-25.9	-0.7	46.4	3496.7
	186	-3242.4	-2276.7	25.9	0.7	102.1	3814.6
16	155	3433.9	10.8	76.6	-0.3	-67.4	17.0
	186	-2650.1	-10.8	-76.6	0.3	-373.6	14.3
17	155	3325.8	28.1	30.9	-0.4	-18.0	110.5
	186	-2542.0	-28.1	-30.9	0.4	-159.8	51.9
1	4	15330.1	-1269.0	-32.0	-0.0	87.7	-2290.4
	37	-13741.6	-1544.2	32.0	0.0	198.5	3522.3
2	4	13905.2	-2121.0	-24.2	-0.1	57.1	-3806.5
	37	-12316.7	-2567.7	24.2	0.1	159.5	5805.7
3	4	15909.6	-1270.1	-29.1	-0.0	79.1	-2296.4
	37	-14321.2	-1543.1	29.1	0.0	181.4	3518.3
4	4	16969.3	1.4	-173.9	0.0	772.6	-55.2
	37	-15380.8	-1.4	173.9	-0.0	783.6	67.6
5	4	8465.8	3.0	53.2	-0.1	-311.1	-34.4
	37	-7244.0	-3.0	-53.2	0.1	-165.3	51.7
6	4	9044.2	-21.5	10.8	-0.2	-105.5	-259.8
	37	-7822.3	21.5	-10.8	0.2	8.3	-27.4
7	4	11349.9	-845.1	-24.6	-0.0	68.2	-1526.7

Comb.	Nodo	N [kg]	T1-2 [kg]	T1-3 [kg]	Mt [kgm]	M1-3 [kgm]	M1-2 [kgm]
	37	-10128.0	-1030.3	24.6	0.0	152.2	2355.5
8	4	10400.0	-1413.1	-19.5	-0.0	47.9	-2537.4
	37	-9178.1	-1712.7	19.5	0.0	126.3	3877.8
9	4	11736.3	-845.9	-22.7	-0.0	62.5	-1530.7
	37	-10514.4	-1029.6	22.7	0.0	140.9	2352.9
10	4	12442.7	1.8	-119.2	0.0	524.9	-36.6
	37	-11220.8	-1.8	119.2	-0.0	542.3	52.4
11	4	12154.6	5.8	-28.1	-0.0	85.1	-12.4
	37	-10932.7	-5.8	28.1	0.0	166.1	64.4
12	4	11791.5	-278.2	-25.7	-0.0	75.8	-518.0
	37	-10569.6	-347.0	25.7	0.0	154.6	826.1
13	4	10239.0	6.6	-28.0	0.0	83.9	-3.2
	37	-9017.2	-6.6	28.0	-0.0	166.6	62.1
14	4	12200.0	4.8	-45.7	0.0	171.2	-17.8
	37	-10978.2	-4.8	45.7	-0.0	237.8	61.0
15	4	10013.6	-1412.4	-21.4	-0.0	53.6	-2533.5
	37	-8791.7	-1713.4	21.4	0.0	137.6	3880.4
16	4	8352.0	2.4	59.8	-0.1	-343.1	-38.3
	37	-7130.2	-2.4	-59.8	0.1	-192.4	50.1
17	4	8979.4	-25.3	14.0	-0.2	-120.9	-285.5
	37	-7757.5	25.3	-14.0	0.2	-4.8	-41.4
1	37	12909.8	-1841.3	-240.9	6.7	551.0	-3647.3
	84	-12332.9	819.7	240.9	-6.7	231.9	-676.9
2	37	11572.8	-3059.6	-220.5	11.4	497.1	-6034.9
	84	-10996.0	1357.0	220.5	-11.4	219.5	-1142.1
3	37	13478.8	-1841.2	-222.4	6.7	507.1	-3646.3
	84	-12902.0	819.7	222.4	-6.7	215.8	-677.6
4	37	14225.2	-11.2	-737.8	-0.2	1716.7	-37.0
	84	-13648.4	11.2	737.8	0.2	681.0	0.6
5	37	6936.8	-19.4	172.4	0.1	-405.7	-98.3
	84	-6493.1	19.4	-172.4	-0.1	-155.8	1.1
6	37	7401.8	-30.4	2.6	0.3	-13.9	-159.9
	84	-6958.1	30.4	-2.6	-0.3	4.6	-79.9
7	37	9513.7	-1228.6	-181.5	4.5	415.9	-2436.8
	84	-9070.0	547.5	181.5	-4.5	174.0	-449.3
8	37	8622.4	-2040.8	-167.9	7.6	380.0	-4028.6
	84	-8178.7	905.7	167.9	-7.6	165.8	-759.4
9	37	9893.1	-1228.5	-169.2	4.5	386.6	-2436.2
	84	-9449.4	547.5	169.2	-4.5	163.3	-449.8
10	37	10390.7	-8.5	-512.8	-0.1	1193.0	-29.9
	84	-9947.0	8.5	512.8	0.1	473.4	2.4
11	37	10287.0	-9.5	-174.8	-0.2	405.8	-46.0
	84	-9843.3	9.5	174.8	0.2	162.4	15.0
12	37	9946.2	-415.7	-169.7	1.4	391.7	-842.1
	84	-9502.5	188.7	169.7	-1.4	159.8	-140.0
13	37	8464.5	-8.8	-175.6	-0.1	408.0	-43.7

Comb.	Nodo	N [kg]	T1-2 [kg]	T1-3 [kg]	Mt [kgm]	M1-3 [kgm]	M1-2 [kgm]
	84	-8020.8	8.8	175.6	0.1	162.6	15.1
14	37	10299.8	-9.3	-238.7	-0.2	554.3	-42.4
	84	-9856.1	9.3	238.7	0.2	221.3	12.3
15	37	8243.0	-2040.8	-180.2	7.6	409.3	-4029.2
	84	-7799.3	905.8	180.2	-7.6	176.5	-759.0
16	37	6838.7	-20.3	200.3	0.1	-471.0	-30.7
	84	-6395.0	20.3	-200.3	-0.1	-181.6	-2.5
17	37	7344.9	-32.3	17.0	0.3	-48.2	74.7
	84	-6901.2	32.3	-17.0	-0.3	-8.3	-97.8
1	84	12222.7	-728.9	31.6	5.7	-103.2	665.6
	105	-12116.8	728.9	-31.6	-5.7	71.7	-1394.6
2	84	10891.0	-1205.9	33.2	9.7	-106.3	1122.8
	105	-10785.0	1205.9	-33.2	-9.7	73.1	-2328.8
3	84	12790.7	-728.5	34.5	5.6	-98.6	666.2
	105	-12684.7	728.5	-34.5	-5.6	64.1	-1394.7
4	84	13558.3	-9.9	-38.3	-0.3	-250.9	0.3
	105	-13452.4	9.9	38.3	0.3	289.2	-10.2
5	84	6404.2	-16.2	55.1	-0.2	57.2	-0.7
	105	-6322.6	16.2	-55.1	0.2	-109.3	-7.5
6	84	6875.3	-23.4	10.5	0.0	-7.4	80.7
	105	-6793.7	23.4	-10.5	-0.0	-29.6	-87.2
7	84	8987.0	-487.0	22.7	3.7	-76.2	441.9
	105	-8905.4	487.0	-22.7	-3.7	53.5	-928.9
8	84	8099.1	-805.0	23.8	6.5	-78.3	746.7
	105	-8017.6	805.0	-23.8	-6.5	54.5	-1551.7
9	84	9365.6	-486.7	24.6	3.7	-73.1	442.2
	105	-9284.1	486.7	-24.6	-3.7	48.5	-928.9
10	84	9877.4	-7.6	-23.9	-0.2	-174.7	-1.7
	105	-9795.8	7.6	23.9	0.2	198.5	-5.9
11	84	9758.4	-9.0	21.2	-0.3	-64.6	-14.6
	105	-9676.9	9.0	-21.2	0.3	43.4	5.5
12	84	9418.8	-168.1	22.0	1.1	-66.2	137.8
	105	-9337.3	168.1	-22.0	-1.1	44.3	-305.9
13	84	7942.3	-8.7	15.9	-0.2	-62.7	-14.7
	105	-7860.8	8.7	-15.9	0.2	46.8	6.0
14	84	9774.5	-8.6	12.4	-0.3	-85.5	-11.9
	105	-9692.9	8.6	-12.4	0.3	73.1	3.2
15	84	7720.5	-805.3	21.9	6.5	-81.4	746.3
	105	-7639.0	805.3	-21.9	-6.5	59.5	-1551.6
16	84	6305.0	-16.9	59.8	-0.2	68.6	2.9
	105	-6223.5	16.9	-59.8	0.2	-122.0	-11.3
17	84	6817.9	-24.6	10.3	0.1	-1.8	98.7
	105	-6736.4	24.6	-10.3	-0.1	-35.9	-104.7
1	105	11971.9	-498.9	-93.0	3.7	44.7	1385.6
	127	-11865.9	498.9	93.0	-3.7	48.3	-1884.5

Comb.	Nodo	N [kg]	T1-2 [kg]	T1-3 [kg]	Mt [kgm]	M1-3 [kgm]	M1-2 [kgm]
2	105	10645.2	-823.7	-75.0	6.4	26.9	2313.7
	127	-10539.3	823.7	75.0	-6.4	48.1	-3137.4
3	105	12538.5	-498.2	-82.0	3.7	41.3	1385.6
	127	-12432.5	498.2	82.0	-3.7	40.7	-1883.8
4	105	13321.8	-7.8	-313.6	-0.2	99.5	10.7
	127	-13215.8	7.8	313.6	0.2	214.2	-18.5
5	105	6210.2	-15.0	68.0	-0.2	80.3	7.7
	127	-6128.7	15.0	-68.0	0.2	-83.3	-14.5
6	105	6685.9	-22.2	1.8	0.1	39.5	87.5
	127	-6604.4	22.2	-1.8	-0.1	-24.2	-90.7
7	105	8795.8	-333.5	-71.9	2.5	35.3	922.9
	127	-8714.2	333.5	71.9	-2.5	36.6	-1256.4
8	105	7911.3	-550.1	-59.9	4.3	23.4	1541.7
	127	-7829.8	550.1	59.9	-4.3	36.5	-2091.7
9	105	9173.5	-333.1	-64.6	2.4	33.0	922.9
	127	-9092.0	333.1	64.6	-2.4	31.6	-1256.0
10	105	9695.7	-6.2	-219.0	-0.2	71.8	6.3
	127	-9614.2	6.2	219.0	0.2	147.2	-12.5
11	105	9565.2	-7.8	-76.7	-0.2	47.2	-5.5
	127	-9483.7	7.8	76.7	0.2	29.5	-2.3
12	105	9226.9	-116.1	-71.4	0.7	41.7	303.9
	127	-9145.4	116.1	71.4	-0.7	29.7	-420.1
13	105	7755.8	-7.8	-80.8	-0.2	46.2	-5.8
	127	-7674.3	7.8	80.8	0.2	34.7	-2.0
14	105	9583.8	-7.3	-103.2	-0.2	51.4	-3.1
	127	-9502.2	7.3	103.2	0.2	51.8	-4.2
15	105	7533.6	-550.5	-67.3	4.3	25.7	1541.6
	127	-7452.1	550.5	67.3	-4.3	41.5	-2092.1
16	105	6110.4	-15.8	80.8	-0.2	86.0	11.4
	127	-6028.9	15.8	-80.8	0.2	-92.8	-18.1
17	105	6628.2	-23.7	9.0	0.1	39.3	105.0
	127	-6546.6	23.7	-9.0	-0.1	-29.0	-107.0
1	127	11721.7	-281.9	-104.5	1.3	67.2	1878.4
	148	-11615.7	281.9	104.5	-1.3	37.3	-2160.3
2	127	10400.1	-463.3	-83.6	2.3	49.5	3127.5
	148	-10294.1	463.3	83.6	-2.3	34.2	-3590.9
3	127	12286.8	-281.0	-96.3	1.3	63.8	1877.7
	148	-12180.8	281.0	96.3	-1.3	32.4	-2158.8
4	127	13084.0	-5.6	-368.6	-0.1	163.3	18.6
	148	-12978.0	5.6	368.6	0.1	205.3	-24.3
5	127	6018.1	-5.5	91.7	-0.3	-4.8	14.4
	148	-5936.6	5.5	-91.7	0.3	-91.5	-19.6
6	127	6497.9	6.1	11.4	-0.5	19.7	90.7
	148	-6416.3	-6.1	-11.4	0.5	-33.5	-90.6
7	127	8605.1	-188.7	-80.1	0.9	51.7	1252.4
	148	-8523.6	188.7	80.1	-0.9	28.4	-1441.1

Comb.	Nodo	N [kg]	T1-2 [kg]	T1-3 [kg]	Mt [kgm]	M1-3 [kgm]	M1-2 [kgm]
8	127	7724.0	-309.7	-66.2	1.5	39.9	2085.1
	148	-7642.5	309.7	66.2	-1.5	26.3	-2394.9
9	127	8981.8	-188.2	-74.7	0.8	49.5	1252.0
	148	-8900.3	188.2	74.7	-0.8	25.2	-1440.2
10	127	9513.3	-4.6	-256.2	-0.1	115.8	12.5
	148	-9431.8	4.6	256.2	0.1	140.4	-17.1
11	127	9372.6	-6.3	-88.4	-0.2	62.2	2.1
	148	-9291.1	6.3	88.4	0.2	26.2	-8.4
12	127	9035.5	-66.9	-82.2	0.2	56.8	418.6
	148	-8953.9	66.9	82.2	-0.2	25.4	-485.4
13	127	7570.0	-6.7	-87.9	-0.1	59.3	1.9
	148	-7488.5	6.7	87.9	0.1	28.6	-8.6
14	127	9393.3	-5.8	-120.2	-0.2	72.0	4.1
	148	-9311.8	5.8	120.2	0.2	48.2	-9.9
15	127	7347.3	-310.3	-71.7	1.6	42.2	2085.6
	148	-7265.8	310.3	71.7	-1.6	29.5	-2395.8
16	127	5917.6	-5.4	106.7	-0.3	-11.6	18.0
	148	-5836.1	5.4	-106.7	0.3	-101.2	-22.9
17	127	6439.8	7.8	19.8	-0.5	15.7	106.9
	148	-6358.3	-7.8	-19.8	0.5	-38.6	-105.0
1	148	11472.6	-71.9	-30.3	-1.5	80.2	2157.6
	156	-11366.6	71.9	30.3	1.5	-49.9	-2229.5
2	148	10155.8	-114.7	-22.5	-2.4	64.2	3586.8
	156	-10049.8	114.7	22.5	2.4	-41.7	-3701.4
3	148	12035.8	-71.0	-45.1	-1.6	74.0	2156.1
	156	-11929.8	71.0	45.1	1.6	-28.9	-2227.1
4	148	12847.6	-3.8	-229.6	-0.1	167.2	24.1
	156	-12741.6	3.8	229.6	0.1	62.4	-28.0
5	148	5826.7	-4.1	105.5	-0.3	13.1	19.4
	156	-5745.2	4.1	-105.5	0.3	-133.6	-23.2
6	148	6310.7	7.5	-11.3	-0.5	34.8	90.3
	156	-6229.2	-7.5	11.3	0.5	-60.0	-87.5
7	148	8415.3	-48.6	-20.7	-1.0	61.6	1439.3
	156	-8333.8	48.6	20.7	1.0	-40.9	-1488.0
8	148	7537.5	-77.1	-15.5	-1.6	50.9	2392.1
	156	-7455.9	77.1	15.5	1.6	-35.5	-2469.3
9	148	8790.8	-48.0	-30.6	-1.0	57.5	1438.3
	156	-8709.3	48.0	30.6	1.0	-26.9	-1486.3
10	148	9332.0	-3.2	-153.5	-0.0	119.6	17.0
	156	-9250.5	3.2	153.5	0.0	33.9	-20.3
11	148	9180.7	-4.9	-34.5	-0.1	68.2	8.1
	156	-9099.2	4.9	34.5	0.1	-33.7	-13.0
12	148	8844.8	-19.2	-32.3	-0.4	63.4	484.6
	156	-8763.3	19.2	32.3	0.4	-31.1	-503.8
13	148	7385.3	-5.5	-13.7	-0.1	68.0	8.3
	156	-7303.8	5.5	13.7	0.1	-54.2	-13.8

Comb.	Nodo	N [kg]	T1-2 [kg]	T1-3 [kg]	Mt [kgm]	M1-3 [kgm]	M1-2 [kgm]
14	148	9203.7	-4.4	-59.9	-0.1	77.2	9.6
	156	-9122.2	4.4	59.9	0.1	-17.2	-14.0
15	148	7161.9	-77.8	-5.6	-1.6	55.1	2393.1
	156	-7080.4	77.8	5.6	1.6	-49.5	-2470.9
16	148	5725.6	-3.8	115.0	-0.3	7.2	22.7
	156	-5644.0	3.8	-115.0	0.3	-139.5	-26.0
17	148	6252.3	9.7	-11.6	-0.6	31.3	104.8
	156	-6170.8	-9.7	11.6	0.6	-60.0	-99.6
1	156	11260.6	-19.7	-102.0	-6.5	176.8	2230.6
	187	-10241.9	-1784.6	102.0	6.5	408.5	2834.6
2	156	9948.7	-28.4	-84.2	-10.8	147.7	3703.6
	187	-8929.9	-2978.7	84.2	10.8	335.8	4763.8
3	156	11821.8	-18.6	-82.8	-6.5	142.5	2228.1
	187	-10803.0	-1785.6	82.8	6.5	332.5	2843.3
4	156	12651.2	-2.6	-234.7	0.1	315.8	27.7
	187	-11632.5	2.6	234.7	-0.1	1031.3	-42.6
5	156	5662.9	-2.3	-11.2	-0.3	82.2	22.9
	187	-4879.2	2.3	11.2	0.3	-19.2	-15.2
6	156	6151.7	12.6	-48.4	-0.6	117.6	87.1
	187	-5368.1	-12.6	48.4	0.6	159.4	12.7
7	156	8254.1	-13.7	-79.7	-4.3	138.3	1488.6
	187	-7470.5	-1189.1	79.7	4.3	319.3	1884.9
8	156	7379.5	-19.5	-67.9	-7.2	119.0	2470.7
	187	-6595.9	-1985.2	67.9	7.2	270.8	3170.9
9	156	8628.2	-13.0	-66.9	-4.3	115.5	1487.0
	187	-7844.6	-1189.8	66.9	4.3	268.6	1890.6
10	156	9181.2	-2.3	-168.2	0.1	231.0	20.1
	187	-8397.6	2.3	168.2	-0.1	734.5	-33.3
11	156	9017.3	-3.9	-79.0	0.0	135.3	12.6
	187	-8233.7	3.9	79.0	-0.0	318.1	-35.1
12	156	8682.5	-6.9	-73.7	-1.4	126.6	503.8
	187	-7898.9	-394.1	73.7	1.4	296.4	607.5
13	156	7229.2	-4.6	-92.1	0.0	159.7	13.5
	187	-6445.6	4.6	92.1	-0.0	369.1	-40.0
14	156	9042.9	-3.4	-93.8	0.0	149.0	13.6
	187	-8259.2	3.4	93.8	-0.0	389.1	-33.3
15	156	7005.4	-20.2	-80.7	-7.2	141.8	2472.3
	187	-6221.8	-1984.5	80.7	7.2	321.4	3165.2
16	156	5560.9	-1.5	-3.8	-0.3	74.0	25.6
	187	-4777.3	1.5	3.8	0.3	-53.8	-13.2
17	156	6092.9	15.4	-44.3	-0.7	113.0	99.3
	187	-5309.3	-15.4	44.3	0.7	140.0	17.7
1	5	132929.4	-3872.3	97.9	980.8	-732.8	-32871.2
	23	-115270.2	2820.6	-97.9	-980.8	76.9	10450.1
2	5	120450.6	-8278.4	249.7	1146.4	-1675.7	-59114.8

Comb.	Nodo	N [kg]	T1-2 [kg]	T1-3 [kg]	Mt [kgm]	M1-3 [kgm]	M1-2 [kgm]
	23	-102791.4	6525.6	-249.7	-1146.4	2.7	9521.4
3	5	131365.5	-4071.0	99.5	1023.3	-740.2	-33584.3
	23	-113706.3	3019.3	-99.5	-1023.3	73.9	9831.8
4	5	128769.9	2145.2	-3918.1	905.6	29589.9	4442.5
	23	-111110.7	-2145.2	3918.1	-905.6	-3338.3	9930.7
5	5	90417.0	1376.4	1828.5	-501.4	-16147.9	2422.7
	23	-76833.0	-1376.4	-1828.5	501.4	3707.5	6216.5
6	5	88431.4	-491.1	816.9	-1126.6	-7500.9	-9660.0
	23	-74847.4	491.1	-816.9	1126.6	153.6	5209.2
7	5	99129.2	-2398.1	57.5	691.3	-469.1	-21456.6
	23	-85545.1	1697.0	-57.5	-691.3	84.1	7738.1
8	5	90810.0	-5335.5	158.7	801.7	-1097.7	-38952.3
	23	-77225.9	4167.0	-158.7	-801.7	34.6	7119.0
9	5	98086.6	-2530.6	58.5	719.7	-474.0	-21932.0
	23	-84502.5	1829.4	-58.5	-719.7	82.1	7325.9
10	5	96356.2	1613.6	-2619.9	641.2	19746.0	3419.2
	23	-82772.1	-1613.6	2619.9	-641.2	-2192.7	7391.9
11	5	101866.5	1678.9	-83.8	498.5	383.2	3840.9
	23	-88282.5	-1678.9	83.8	-498.5	178.3	7407.7
12	5	98673.4	232.0	-34.3	559.9	78.4	-4854.7
	23	-85089.4	-465.7	34.3	-559.9	151.1	7192.2
13	5	92322.8	1637.4	-73.2	381.5	280.7	3994.7
	23	-78738.8	-1637.4	73.2	-381.5	210.0	6975.6
14	5	99782.7	1621.9	-590.0	527.8	4247.2	3619.6
	23	-86198.7	-1621.9	590.0	-527.8	-294.4	7246.8
15	5	91852.6	-5203.0	157.6	773.4	-1092.8	-38476.9
	23	-78268.5	4034.5	-157.6	-773.4	36.7	7531.2
16	5	90418.2	1342.9	1998.1	-570.9	-17503.6	2243.4
	23	-76834.2	-1342.9	-1998.1	570.9	4012.1	6098.5
17	5	88272.9	-707.1	900.2	-1247.0	-8151.7	-10933.4
	23	-74688.9	707.1	-900.2	1247.0	144.1	4887.3
1	23	108204.5	-2818.9	280.0	1102.0	-76.9	-6978.6
	38	-102274.2	2465.8	-280.0	-1102.0	-553.0	1033.4
2	23	96288.2	-6527.1	699.1	1390.9	-2.7	-6331.3
	38	-90357.8	5938.5	-699.1	-1390.9	-1570.2	-7692.5
3	23	107203.1	-3018.4	294.1	1158.3	-73.9	-6641.5
	38	-101272.7	2665.2	-294.1	-1158.3	-588.0	247.5
4	23	104607.5	2175.4	-3600.6	960.0	3338.3	-6740.4
	38	-98677.1	-2175.4	3600.6	-960.0	4763.0	11635.0
5	23	72089.7	1424.2	1725.8	337.9	-3707.5	-3890.4
	38	-67527.9	-1424.2	-1725.8	-337.9	-1602.9	5764.9
6	23	70106.3	-254.8	773.9	1611.0	-153.6	-2880.6
	38	-65544.5	254.8	-773.9	-1611.0	-1423.2	2743.4
7	23	80302.3	-1695.3	164.5	767.4	-84.1	-5163.9
	38	-75740.5	1459.9	-164.5	-767.4	-286.0	1614.3
8	23	72358.1	-4167.4	443.9	960.0	-34.6	-4732.3

Comb.	Nodo	N [kg]	T1-2 [kg]	T1-3 [kg]	Mt [kgm]	M1-3 [kgm]	M1-2 [kgm]
	38	-67796.3	3775.0	-443.9	-960.0	-964.1	-4203.0
9	23	79634.7	-1828.3	173.9	804.9	-82.1	-4939.2
	38	-75072.9	1592.9	-173.9	-804.9	-309.3	1090.3
10	23	77904.3	1634.2	-2422.6	672.7	2192.7	-5005.0
	38	-73342.5	-1634.2	2422.6	-672.7	3258.0	8682.0
11	23	83414.6	1682.8	-220.0	465.7	-178.3	-5020.8
	38	-78852.8	-1682.8	220.0	-465.7	673.4	8807.2
12	23	80346.6	468.7	-83.1	567.6	-151.1	-4867.9
	38	-75784.8	-547.1	83.1	-567.6	338.2	6010.7
13	23	73995.9	1641.7	-202.8	340.9	-210.0	-4651.2
	38	-69434.1	-1641.7	202.8	-340.9	666.2	8345.0
14	23	81455.8	1629.0	-656.4	510.2	294.4	-4922.4
	38	-76894.0	-1629.0	656.4	-510.2	1182.6	8587.6
15	23	73025.7	-4034.5	434.4	922.5	-36.7	-4957.0
	38	-68463.9	3642.0	-434.4	-922.5	-940.8	-3679.0
16	23	72090.8	1399.6	1889.8	340.2	-4012.1	-3772.1
	38	-67529.0	-1399.6	-1889.8	-340.2	-1999.5	5491.0
17	23	69947.6	-431.2	862.9	1717.1	-144.1	-2557.7
	38	-65385.8	431.2	-862.9	-1717.1	-1694.2	2078.9
1	38	80438.1	19113.1	-1361.5	77.4	1680.6	20117.2
	52	-72378.1	-19113.1	1361.5	-77.4	2540.0	39133.3
2	38	72670.3	20493.2	-1877.7	-242.6	2539.4	16564.1
	52	-64610.3	-20493.2	1877.7	242.6	3281.4	46964.8
3	38	81705.8	17390.6	-1439.7	141.7	1681.9	17331.6
	52	-73645.8	-17390.6	1439.7	-141.7	2781.2	36579.3
4	38	76804.9	13458.4	-653.0	873.2	-1877.3	20319.5
	52	-68744.9	-13458.4	653.0	-873.2	3901.5	21401.6
5	38	50246.7	11295.0	749.1	-758.0	2702.5	16834.9
	52	-44046.7	-11295.0	-749.1	758.0	-2587.4	20069.5
6	38	49666.7	11846.8	-598.9	-1557.3	2673.3	18595.2
	52	-43466.7	-11846.8	598.9	1557.3	342.1	23252.6
7	38	59320.8	13931.1	-931.9	79.0	1130.9	15157.5
	52	-53120.8	-13931.1	931.9	-79.0	1757.9	28028.8
8	38	54142.3	14851.2	-1276.0	-134.3	1703.4	12788.8
	52	-47942.3	-14851.2	1276.0	134.3	2252.2	33249.9
9	38	60165.9	12782.8	-984.0	121.8	1131.7	13300.4
	52	-53965.9	-12782.8	984.0	-121.8	1918.7	26326.2
10	38	56898.7	10161.3	-459.5	609.5	-1241.1	15292.3
	52	-50698.7	-10161.3	459.5	-609.5	2665.6	16207.7
11	38	61883.8	10173.1	-421.0	403.1	223.3	14932.0
	52	-55683.8	-10173.1	421.0	-403.1	1081.8	16604.6
12	38	59966.7	10769.7	-598.3	300.8	515.1	13961.1
	52	-53766.7	-10769.7	598.3	-300.8	1339.6	19425.1
13	38	52733.8	10425.6	-277.3	284.7	158.1	15426.6
	52	-46533.8	-10425.6	277.3	-284.7	701.4	16892.8
14	38	60518.0	9831.8	-435.0	449.5	-73.8	14461.8

Comb.	Nodo	N [kg]	T1-2 [kg]	T1-3 [kg]	Mt [kgm]	M1-3 [kgm]	M1-2 [kgm]
	52	-54318.0	-9831.8	435.0	-449.5	1422.2	16016.7
15	38	53297.2	15999.5	-1223.9	-177.2	1702.6	14645.8
	52	-47097.2	-15999.5	1223.9	177.2	2091.4	34952.5
16	38	50197.7	11368.9	822.0	-840.2	3101.0	17029.5
	52	-43997.7	-11368.9	-822.0	840.2	-2963.7	20467.8
17	38	49574.9	11979.1	-639.0	-1705.2	2967.4	19121.7
	52	-43374.9	-11979.1	639.0	1705.2	340.1	24154.2
1	52	50938.5	-4574.8	1412.5	-1067.1	-1096.9	-21951.4
	73	-50548.5	4574.8	-1412.5	1067.1	885.0	21265.2
2	52	47400.7	-8737.1	1758.3	-2259.6	-2030.2	-42572.5
	73	-47010.7	8737.1	-1758.3	2259.6	1766.5	41262.0
3	52	54165.7	-4780.9	1493.6	-1009.6	-1063.4	-22843.8
	73	-53775.7	4780.9	-1493.6	1009.6	839.4	22126.7
4	52	45243.4	1256.2	42.4	153.5	-306.7	7852.8
	73	-44853.4	-1256.2	-42.4	-153.5	300.3	-7664.4
5	52	28923.4	19.2	-175.7	217.7	2422.8	-416.5
	73	-28623.4	-19.2	175.7	-217.7	-2396.8	421.4
6	52	28666.7	-860.2	465.3	-1308.7	86.5	-6337.8
	73	-28366.7	860.2	-465.3	1308.7	-153.1	6213.8
7	52	37011.9	-2976.9	994.1	-670.1	-726.9	-14117.9
	73	-36711.9	2976.9	-994.1	670.1	577.8	13671.4
8	52	34653.3	-5751.7	1224.7	-1465.1	-1349.1	-27865.4
	73	-34353.3	5751.7	-1224.7	1465.1	1165.4	27002.6
9	52	39163.3	-3114.2	1048.2	-631.8	-704.6	-14712.9
	73	-38863.3	3114.2	-1048.2	631.8	547.4	14245.8
10	52	33215.1	910.5	80.7	143.6	-200.1	5751.5
	73	-32915.1	-910.5	-80.7	-143.6	188.0	-5615.0
11	52	38714.9	848.8	650.8	515.9	189.8	5078.7
	73	-38414.9	-848.8	-650.8	-515.9	-287.4	-4951.4
12	52	37978.6	-516.5	771.8	123.4	-117.0	-1702.8
	73	-37678.6	516.5	-771.8	-123.4	1.3	1625.3
13	52	30134.8	811.7	497.7	396.9	103.9	4961.5
	73	-29834.8	-811.7	-497.7	-396.9	-178.5	-4839.8
14	52	37690.9	815.9	543.0	445.2	112.8	5020.6
	73	-37390.9	-815.9	-543.0	-445.2	-194.2	-4898.2
15	52	32501.9	-5614.4	1170.6	-1503.4	-1371.4	-27270.4
	73	-32201.9	5614.4	-1170.6	1503.4	1195.8	26428.3
16	52	28982.9	-54.3	-264.7	204.8	2797.1	-963.4
	73	-28682.9	54.3	264.7	-204.8	-2757.7	957.6
17	52	28702.7	-1014.7	474.6	-1452.1	80.5	-7536.1
	73	-28402.7	1014.7	-474.6	1452.1	-148.3	7389.8
1	73	50520.2	-4190.6	997.4	-1194.5	-809.4	-21249.0
	90	-47920.2	4190.6	-997.4	1194.5	-188.0	17058.4
2	73	46974.3	-8096.0	1155.1	-2474.2	-1702.0	-41234.1
	90	-44374.3	8096.0	-1155.1	2474.2	546.9	33138.1

Comb.	Nodo	N [kg]	T1-2 [kg]	T1-3 [kg]	Mt [kgm]	M1-3 [kgm]	M1-2 [kgm]
3	73	53743.9	-4397.0	1085.9	-1136.3	-768.6	-22110.5
	90	-51143.9	4397.0	-1085.9	1136.3	-317.3	17713.5
4	73	44923.7	1254.7	114.4	157.4	-91.9	7663.3
	90	-42323.7	-1254.7	-114.4	-157.4	-22.5	-6408.6
5	73	28531.5	31.5	22.7	218.7	2404.1	-422.1
	90	-26531.5	-31.5	-22.7	-218.7	-2458.1	466.9
6	73	28308.0	-834.6	470.2	-1310.8	184.7	-6214.2
	90	-26308.0	834.6	-470.2	1310.8	-640.9	5411.2
7	73	36688.8	-2720.7	709.6	-754.9	-521.3	-13660.7
	90	-34688.8	2720.7	-709.6	754.9	-188.3	10940.0
8	73	34324.8	-5324.3	814.7	-1608.0	-1116.4	-26984.2
	90	-32324.8	5324.3	-814.7	1608.0	301.7	21659.8
9	73	38837.9	-2858.3	768.7	-716.1	-494.2	-14235.0
	90	-36837.9	2858.3	-768.7	716.1	-274.5	11376.7
10	73	32957.8	909.5	121.0	146.4	-43.0	5614.1
	90	-30957.8	-909.5	-121.0	-146.4	-78.0	-4704.7
11	73	38392.8	847.9	570.4	518.5	345.1	4950.6
	90	-36392.8	-847.9	-570.4	-518.5	-915.6	-4102.6
12	73	37654.3	-431.7	627.5	97.0	53.5	-1622.3
	90	-35654.3	431.7	-627.5	-97.0	-681.0	1190.6
13	73	29810.3	811.3	423.7	398.4	233.0	4839.0
	90	-27810.3	-811.3	-423.7	-398.4	-656.7	-4027.7
14	73	37380.9	815.0	488.8	447.9	268.2	4897.4
	90	-35380.9	-815.0	-488.8	-447.9	-756.9	-4082.3
15	73	32175.8	-5186.8	755.7	-1646.8	-1143.6	-26409.8
	90	-30175.8	5186.8	-755.7	1646.8	387.9	21223.1
16	73	28585.7	-42.0	-51.8	205.7	2765.9	-958.2
	90	-26585.7	42.0	51.8	-205.7	-2745.8	931.3
17	73	28341.3	-989.7	476.0	-1454.5	179.7	-7390.2
	90	-26341.3	989.7	-476.0	1454.5	-640.0	6437.0
1	90	47767.5	-3780.8	309.3	-1268.5	404.7	-17028.9
	112	-45167.5	3780.8	-309.3	1268.5	-714.0	13248.1
2	90	44227.3	-7411.2	494.4	-2600.9	-359.6	-33087.7
	112	-41627.3	7411.2	-494.4	2600.9	-134.8	25676.5
3	90	50968.2	-3987.2	260.8	-1209.3	553.5	-17684.1
	112	-48368.2	3987.2	-260.8	1209.3	-814.3	13696.9
4	90	42156.8	1250.6	-1635.1	160.2	496.9	6407.0
	112	-39556.8	-1250.6	1635.1	-160.2	1138.2	-5156.4
5	90	26450.8	55.0	1213.3	220.5	2496.3	-467.1
	112	-24450.8	-55.0	-1213.3	-220.5	-2978.6	535.4
6	90	26221.4	-784.5	805.2	-1309.7	725.2	-5410.4
	112	-24221.4	784.5	-805.2	1309.7	-1069.3	4655.3
7	90	34575.8	-2447.6	221.8	-804.0	346.5	-10920.4
	112	-32575.8	2447.6	-221.8	804.0	-568.3	8472.8
8	90	32215.6	-4867.9	345.2	-1692.3	-163.0	-21626.3
	112	-30215.6	4867.9	-345.2	1692.3	-182.2	16758.4

Comb.	Nodo	N [kg]	T1-2 [kg]	T1-3 [kg]	Mt [kgm]	M1-3 [kgm]	M1-2 [kgm]
9	90	36709.6	-2585.3	189.5	-764.6	445.7	-11357.2
	112	-34709.6	2585.3	-189.5	764.6	-635.2	8772.0
10	90	30835.3	906.6	-1074.4	148.4	408.0	4703.5
	112	-28835.3	-906.6	1074.4	-148.4	666.5	-3796.9
11	90	36263.8	846.1	16.7	522.4	1097.8	4101.4
	112	-34263.8	-846.1	-16.7	-522.4	-1114.5	-3255.2
12	90	35526.6	-341.9	77.1	83.4	855.5	-1184.9
	112	-33526.6	341.9	-77.1	-83.4	-932.6	843.0
13	90	27712.1	809.8	84.4	400.8	794.5	4026.7
	112	-25712.1	-809.8	-84.4	-400.8	-878.9	-3216.9
14	90	35250.5	813.0	-206.9	451.5	969.7	4081.1
	112	-33250.5	-813.0	206.9	-451.5	-762.8	-3268.1
15	90	30081.8	-4730.3	377.6	-1731.7	-262.2	-21189.5
	112	-28081.8	4730.3	-377.6	1731.7	-115.3	16459.1
16	90	26505.9	-18.0	1332.1	207.5	2786.4	-931.3
	112	-24505.9	18.0	-1332.1	-207.5	-3212.9	928.0
17	90	26255.2	-939.9	878.3	-1453.4	724.0	-6436.1
	112	-24255.2	939.9	-878.3	1453.4	-1078.2	5529.3
1	112	45021.9	-3361.7	355.5	-1342.0	924.2	-13227.6
	133	-42421.9	3361.7	-355.5	1342.0	-1279.7	9865.9
2	112	41486.9	-6710.4	492.9	-2727.0	314.8	-25641.6
	133	-38886.8	6710.4	-492.9	2727.0	-807.6	18931.3
3	112	48200.6	-3568.2	325.6	-1282.0	1043.6	-13676.6
	133	-45600.6	3568.2	-325.6	1282.0	-1369.1	10108.4
4	112	39397.1	1246.0	-1591.2	162.8	-675.9	5155.6
	133	-36797.1	-1246.0	1591.2	-162.8	2267.1	-3909.6
5	112	24373.7	82.7	1130.9	222.7	2983.4	-535.5
	133	-22373.7	-82.7	-1130.9	-222.7	-3842.5	632.3
6	112	24138.6	-724.9	32.3	-1306.9	1167.7	-4655.1
	133	-22138.6	724.9	-32.3	1306.9	-1355.3	3959.1
7	112	32467.9	-2168.5	255.3	-852.8	722.0	-8459.2
	133	-30467.9	2168.5	-255.3	852.8	-977.2	6290.7
8	112	30111.3	-4400.9	346.8	-1776.1	315.7	-16735.2
	133	-28111.3	4400.9	-346.8	1776.1	-662.5	12334.3
9	112	34587.1	-2306.1	235.3	-812.8	801.5	-8758.5
	133	-32587.1	2306.1	-235.3	812.8	-1036.9	6452.4
10	112	28718.1	903.3	-1042.5	150.4	-344.8	3796.3
	133	-26718.1	-903.3	1042.5	-150.4	1387.3	-2893.0
11	112	34140.6	843.8	97.7	526.4	1293.2	3254.4
	133	-32140.6	-843.8	-97.7	-526.4	-1390.9	-2410.7
12	112	33404.7	-250.4	143.5	69.8	1103.1	-839.0
	133	-31404.7	250.4	-143.5	-69.8	-1246.7	588.6
13	112	25618.3	807.8	129.4	403.4	1014.0	3216.4
	133	-23618.3	-807.8	-129.4	-403.4	-1143.4	-2408.6
14	112	33126.1	810.5	-134.3	455.2	971.1	3267.3
	133	-31126.1	-810.5	134.3	-455.2	-836.7	-2456.8

Comb.	Nodo	N [kg]	T1-2 [kg]	T1-3 [kg]	Mt [kgm]	M1-3 [kgm]	M1-2 [kgm]
15	112	27992.1	-4263.3	366.8	-1816.1	236.1	-16435.8
	133	-25992.1	4263.3	-366.8	1816.1	-602.9	12172.6
16	112	24429.6	10.7	1523.1	209.7	3214.2	-928.1
	133	-22429.6	-10.7	-1523.1	-209.7	-4080.5	954.1
17	112	24173.0	-879.5	994.9	-1450.5	1174.6	-5529.0
	133	-22173.0	879.5	-994.9	1450.5	-1373.0	4681.3
1	133	42278.2	-2925.4	231.4	-1404.0	1488.9	-9856.4
	157	-39678.2	2925.4	-231.4	1404.0	-1720.3	6931.0
2	133	38748.3	-5980.9	384.1	-2833.9	985.5	-18915.0
	157	-36148.3	5980.9	-384.1	2833.9	-1369.5	12934.1
3	133	45435.4	-3132.1	210.5	-1343.2	1597.2	-10099.1
	157	-42835.4	3132.1	-210.5	1343.2	-1807.6	6967.0
4	133	36643.0	1241.4	-1760.0	165.4	-1816.3	3909.2
	157	-34043.0	-1241.4	1760.0	-165.4	3576.4	-2667.8
5	133	22294.9	115.6	1282.6	225.2	3841.0	-632.5
	157	-20294.9	-115.6	-1282.6	-225.2	-4695.0	764.1
6	133	22055.6	-654.1	825.5	-1303.0	1474.8	-3959.3
	157	-20055.6	654.1	-825.5	1303.0	-1428.0	3336.4
7	133	30361.5	-1877.8	160.6	-893.8	1130.3	-6284.3
	157	-28361.5	1877.8	-160.6	893.8	-1290.8	4406.5
8	133	28008.2	-3914.8	262.4	-1847.1	794.6	-12323.4
	157	-26008.2	3914.8	-262.4	1847.1	-1057.0	8408.6
9	133	32466.3	-2015.6	146.6	-853.3	1202.4	-6446.1
	157	-30466.3	2015.6	-146.6	853.3	-1349.0	4430.5
10	133	26604.7	900.0	-1167.1	152.5	-1073.2	2892.8
	157	-24604.7	-900.0	1167.1	-152.5	2240.3	-1992.7
11	133	32019.1	841.3	0.5	530.4	1569.8	2410.2
	157	-30019.1	-841.3	-0.5	-530.4	-1570.3	-1569.0
12	133	31284.4	-155.2	50.6	58.9	1417.1	-586.8
	157	-29284.4	155.2	-50.6	-58.9	-1467.8	431.7
13	133	23525.5	805.8	31.2	406.2	1279.0	2408.4
	157	-21525.4	-805.8	-31.2	-406.2	-1310.2	-1602.6
14	133	31003.7	807.8	-235.3	458.9	1043.6	2456.4
	157	-29003.7	-807.8	235.3	-458.9	-808.3	-1648.6
15	133	25903.4	-3777.0	276.3	-1887.6	722.5	-12161.6
	157	-23903.4	3777.0	-276.3	1887.6	-998.8	8384.6
16	133	22351.4	45.4	1407.6	212.2	4071.1	-954.3
	157	-20351.4	-45.4	-1407.6	-212.2	-4971.0	1016.9
17	133	22090.4	-806.1	902.2	-1446.4	1491.7	-4681.5
	157	-20090.4	806.1	-902.2	1446.4	-1439.6	3908.8
1	157	39462.5	-2180.9	254.8	-1447.7	1938.4	-6933.2
	168	-33144.4	1837.5	-254.8	1447.7	-2550.0	2111.1
2	157	35938.3	-4738.1	438.8	-2910.5	1554.5	-12937.6
	168	-29620.2	4165.9	-438.8	2910.5	-2607.5	2252.8
3	157	42596.5	-2388.0	236.5	-1386.3	2045.2	-6969.4

Comb.	Nodo	N [kg]	T1-2 [kg]	T1-3 [kg]	Mt [kgm]	M1-3 [kgm]	M1-2 [kgm]
	168	-36278.4	2044.6	-236.5	1386.3	-2612.9	1650.2
4	157	33818.8	1237.4	-2107.9	168.0	-3127.5	2667.8
	168	-27500.7	-1237.4	2107.9	-168.0	8186.5	301.8
5	157	20161.1	180.2	1160.2	228.0	4701.8	-764.4
	168	-15301.0	-180.2	-1160.2	-228.0	-7802.5	1267.5
6	157	19918.3	-516.0	784.8	-1297.9	1559.2	-3337.0
	168	-15058.2	516.0	-784.8	1297.9	-5100.4	2228.0
7	157	28199.9	-1381.7	176.4	-922.7	1450.6	-4407.9
	168	-23339.8	1152.8	-176.4	922.7	-1874.0	1366.6
8	157	25850.5	-3086.5	299.0	-1897.9	1194.6	-8410.9
	168	-20990.4	2705.0	-299.0	1897.9	-1912.3	1461.1
9	157	30289.2	-1519.8	164.2	-881.8	1521.7	-4432.1
	168	-25429.2	1290.8	-164.2	881.8	-1915.9	1059.3
10	157	24437.5	897.1	-1398.8	154.5	-1926.7	1992.7
	168	-19577.4	-897.1	1398.8	-154.5	5283.7	160.4
11	157	29841.1	839.0	-8.3	534.6	1757.5	1568.7
	168	-24981.0	-839.0	8.3	-534.6	-1737.5	444.9
12	157	29107.8	8.7	51.7	52.1	1646.0	-432.3
	168	-24247.7	-85.0	-51.7	-52.1	-1770.1	544.7
13	157	21378.4	804.1	25.9	409.2	1452.6	1602.6
	168	-16518.3	-804.1	-25.9	-409.2	-1514.7	327.3
14	157	28825.1	805.4	-287.8	462.6	1021.7	1648.4
	168	-23965.1	-805.4	287.8	-462.6	-330.9	284.6
15	157	23761.2	-2948.5	311.2	-1938.8	1123.4	-8386.8
	168	-18901.1	2566.9	-311.2	1938.8	-1870.4	1768.3
16	157	20218.1	114.5	1275.1	215.0	4968.3	-1017.2
	168	-15358.0	-114.5	-1275.1	-215.0	-8322.4	1367.8
17	157	19953.5	-660.4	858.7	-1441.1	1570.7	-3909.5
	168	-15093.4	660.4	-858.7	1441.1	-5403.0	2459.5
1	168	22025.6	-1877.2	-8732.1	-5509.1	2550.0	3384.1
	188	-13232.9	1399.3	8732.1	5509.1	26615.1	-8855.8
2	168	20751.4	-4202.8	-7825.2	-6510.2	2607.5	2115.4
	188	-11958.7	3406.4	7825.2	6510.2	23528.5	-14822.8
3	168	27409.5	-2090.1	-9376.6	-5754.3	2612.9	2719.9
	188	-18616.8	1612.3	9376.6	5754.3	28704.9	-8902.9
4	168	18631.9	1256.3	-8953.4	-3485.9	-8186.5	4071.5
	188	-9839.2	-1256.3	8953.4	3485.9	38090.8	124.7
5	168	9514.3	443.2	-4437.6	-2208.0	7802.5	1581.8
	188	-2750.7	-443.2	4437.6	2208.0	7186.7	-161.3
6	168	9268.9	85.3	-4832.3	-3699.1	5100.4	628.4
	188	-2505.3	-85.3	4832.3	3699.1	11215.9	-458.1
7	168	15556.1	-1181.2	-6391.2	-3900.3	1874.0	2476.2
	188	-8792.5	862.6	6391.2	3900.3	19472.5	-5889.4
8	168	14706.7	-2731.6	-5786.5	-4567.7	1912.3	1630.4
	188	-7943.1	2200.7	5786.5	4567.7	17414.8	-9867.4
9	168	19145.4	-1323.2	-6820.8	-4063.7	1915.9	2033.4

Comb.	Nodo	N [kg]	T1-2 [kg]	T1-3 [kg]	Mt [kgm]	M1-3 [kgm]	M1-2 [kgm]
	188	-12381.8	1004.6	6820.8	4063.7	20865.7	-5920.8
10	168	13293.7	907.8	-6538.7	-2551.5	-5283.7	2934.5
	188	-6530.1	-907.8	6538.7	2551.5	27123.0	97.6
11	168	18697.3	807.2	-7060.4	-2797.9	1737.5	2649.9
	188	-11933.7	-807.2	7060.4	2797.9	21844.4	46.1
12	168	18464.0	53.7	-6832.3	-3161.1	1770.1	2299.4
	188	-11700.3	-159.9	6832.3	3161.1	21049.7	-1942.9
13	168	10734.6	782.6	-5512.9	-2195.2	1514.7	2517.6
	188	-3971.0	-782.6	5512.9	2195.2	16898.3	96.2
14	168	18181.3	781.6	-6982.7	-2757.8	330.9	2560.2
	188	-11417.7	-781.6	6982.7	2757.8	22991.4	50.1
15	168	11117.4	-2589.7	-5356.9	-4404.2	1870.4	2073.2
	188	-4353.8	2058.7	5356.9	4404.2	16021.5	-9836.0
16	168	9571.3	407.1	-4358.9	-2220.0	8322.4	1482.3
	188	-2807.6	-407.1	4358.9	2220.0	6441.3	-188.5
17	168	9304.4	3.5	-4793.8	-3841.6	5403.0	399.2
	188	-2540.7	-3.5	4793.8	3841.6	10815.8	-512.1
1	6	95397.7	-1373.3	213.7	506.8	-1027.4	-24334.6
	24	-77977.7	1373.3	-213.7	-506.8	-404.6	15133.5
2	6	89775.2	-2612.9	378.3	1252.3	-1855.5	-40677.9
	24	-72355.2	2612.9	-378.3	-1252.3	-678.8	23171.2
3	6	97073.3	-1496.7	218.7	483.0	-1053.8	-24919.7
	24	-79653.3	1496.7	-218.7	-483.0	-411.4	14892.0
4	6	93826.1	691.4	-3847.9	-620.9	28794.4	2708.9
	24	-76406.1	-691.4	3847.9	620.9	-3013.8	1923.7
5	6	65755.3	-534.1	1878.1	502.8	-16317.2	-8193.2
	24	-52355.3	534.1	-1878.1	-502.8	3493.9	5112.3
6	6	64731.6	-1394.2	860.2	1151.4	-7664.4	-16091.0
	24	-51331.6	1394.2	-860.2	-1151.4	-226.4	8282.9
7	6	71651.2	-880.1	140.1	304.4	-691.2	-16199.8
	24	-58251.2	880.1	-140.1	-304.4	-247.6	10303.2
8	6	67902.9	-1706.5	249.8	801.4	-1243.3	-27095.3
	24	-54502.9	1706.5	-249.8	-801.4	-430.4	15661.7
9	6	72768.3	-962.3	143.4	288.6	-708.8	-16589.8
	24	-59368.3	962.3	-143.4	-288.6	-252.1	10142.3
10	6	70603.5	496.4	-2567.6	-447.4	19190.0	1829.2
	24	-57203.5	-496.4	2567.6	447.4	-1987.0	1496.7
11	6	74337.9	232.1	-18.5	-412.0	67.5	-338.8
	24	-60937.9	-232.1	18.5	412.0	56.8	1893.8
12	6	72914.1	-176.1	36.0	-168.5	-202.8	-5776.3
	24	-59514.1	176.1	-36.0	168.5	-38.5	4596.5
13	6	67327.0	305.4	-20.5	-328.9	28.9	166.3
	24	-53927.1	-305.4	20.5	328.9	108.8	1879.7
14	6	73454.2	264.5	-527.5	-418.3	3883.8	8.6
	24	-60054.2	-264.5	527.5	418.3	-349.8	1763.5
15	6	66785.9	-1624.3	246.5	817.2	-1225.6	-26705.3

Comb.	Nodo	N [kg]	T1-2 [kg]	T1-3 [kg]	Mt [kgm]	M1-3 [kgm]	M1-2 [kgm]
	24	-53385.9	1624.3	-246.5	-817.2	-425.9	15822.7
16	6	65755.3	-622.1	2048.1	569.2	-17667.0	-8926.3
	24	-52355.3	622.1	-2048.1	-569.2	3788.0	5381.3
17	6	64651.5	-1596.2	945.1	1271.0	-8310.6	-17581.3
	24	-51251.5	1596.2	-945.1	-1271.0	-263.8	8833.9
1	24	76724.7	-1374.0	-38.7	378.4	404.6	-14567.7
	56	-62814.7	1374.0	38.7	-378.4	-197.8	7216.6
2	24	71102.2	-2610.8	-158.0	975.2	678.8	-22605.4
	56	-57192.2	2610.8	158.0	-975.2	166.6	8637.7
3	24	78400.3	-1497.6	-29.5	357.1	411.4	-14326.3
	56	-64490.3	1497.6	29.5	-357.1	-253.3	6313.9
4	24	75153.1	694.0	-1231.9	653.6	3013.8	-1357.8
	56	-61243.1	-694.0	1231.9	-653.6	3576.6	5070.7
5	24	51391.3	-411.8	1275.8	-1153.5	-3493.9	-4677.1
	56	-40691.3	411.8	-1275.8	1153.5	-4325.1	1106.3
6	24	50376.6	-1099.2	138.3	-1690.2	226.4	-7847.6
	56	-39676.6	1099.2	-138.3	1690.2	-2239.4	-2050.0
7	24	57287.4	-880.9	-16.8	225.4	247.6	-9868.1
	56	-46587.4	880.9	16.8	-225.4	-157.7	5155.0
8	24	53539.1	-1705.4	-96.4	623.3	430.4	-15226.5
	56	-42839.1	1705.4	96.4	-623.3	85.2	6102.5
9	24	58404.4	-963.3	-10.7	211.2	252.1	-9707.1
	56	-47704.4	963.3	10.7	-211.2	-194.8	4553.2
10	24	56239.6	497.8	-812.3	408.8	1987.0	-1061.5
	56	-45539.6	-497.8	812.3	-408.8	2358.5	3724.4
11	24	59974.1	228.4	101.1	-345.6	-56.8	-1458.7
	56	-49274.1	-228.4	-101.1	345.6	-484.3	2680.6
12	24	58550.2	-178.8	62.2	-151.1	38.5	-4161.3
	56	-47850.2	178.8	-62.2	151.1	-371.2	3204.5
13	24	52963.2	302.2	81.8	-271.3	-108.8	-1444.6
	56	-42263.2	-302.2	-81.8	271.3	-328.6	3061.5
14	24	59090.4	261.8	-81.0	-194.0	349.8	-1328.3
	56	-48390.4	-261.8	81.0	194.0	83.5	2728.9
15	24	52422.0	-1623.0	-102.4	637.5	425.9	-15387.5
	56	-41722.0	1623.0	102.4	-637.5	122.2	6704.3
16	24	51391.2	-481.8	1373.5	-1226.2	-3788.0	-4946.2
	56	-40691.2	481.8	-1373.5	1226.2	-4812.2	748.8
17	24	50295.7	-1250.3	140.0	-1808.2	263.8	-8398.8
	56	-39595.7	1250.3	-140.0	1808.2	-2495.8	-3076.9
1	56	36976.8	-2891.1	35.6	369.3	-1717.7	-16248.5
	94	-33986.8	2891.1	-35.6	-369.3	1676.8	12923.8
2	56	35691.3	-5022.6	263.2	1432.4	-1948.0	-28368.3
	94	-32701.3	5022.6	-263.2	-1432.4	1645.3	22592.3
3	56	40963.0	-2949.1	-21.9	180.2	-1894.4	-16691.1
	94	-37973.0	2949.1	21.9	-180.2	1919.6	13299.6

Comb.	Nodo	N [kg]	T1-2 [kg]	T1-3 [kg]	Mt [kgm]	M1-3 [kgm]	M1-2 [kgm]
4	56	35682.9	255.4	48.5	-1143.4	-2721.3	1261.7
	94	-32692.9	-255.4	-48.5	1143.4	2665.5	-967.9
5	56	21354.9	83.4	-618.6	-602.1	2310.7	-31.5
	94	-19054.9	-83.4	618.6	602.1	-1605.4	142.5
6	56	21904.1	-1201.5	-405.1	-1762.1	1027.8	-7733.6
	94	-19604.1	1201.5	405.1	1762.1	-568.8	6411.4
7	56	27267.7	-1903.5	22.9	188.4	-1219.7	-10746.9
	94	-24967.7	1903.5	-22.9	-188.4	1193.4	8557.9
8	56	26410.7	-3324.5	174.6	897.0	-1373.2	-18826.8
	94	-24110.7	3324.5	-174.6	-897.0	1172.4	15003.6
9	56	29925.2	-1942.2	-15.5	62.2	-1337.5	-11042.0
	94	-27625.2	1942.2	15.5	-62.2	1355.3	8808.5
10	56	26405.1	194.2	31.5	-820.1	-1888.7	926.5
	94	-24105.1	-194.2	-31.5	820.1	1852.5	-703.2
11	56	29597.9	166.8	-201.9	-919.9	-1026.9	813.5
	94	-27297.9	-166.8	201.9	919.9	1259.1	-621.7
12	56	29348.6	-541.2	-130.6	-574.5	-1112.5	-3197.0
	94	-27048.6	541.2	130.6	574.5	1262.8	2574.6
13	56	23267.2	199.6	-87.5	-613.9	-734.8	945.1
	94	-20967.2	-199.6	87.5	613.9	835.5	-715.5
14	56	29347.5	162.5	-159.3	-918.0	-1215.7	753.6
	94	-27047.5	-162.5	159.3	918.0	1398.8	-566.7
15	56	23753.2	-3285.8	213.0	1023.1	-1255.4	-18531.7
	94	-21453.2	3285.8	-213.0	-1023.1	1010.5	14753.0
16	56	21317.4	66.2	-706.1	-602.8	2796.5	-227.1
	94	-19017.4	-66.2	706.1	602.8	-1989.5	320.7
17	56	21910.8	-1340.7	-456.5	-1861.5	1292.7	-8822.8
	94	-19610.8	1340.7	456.5	1861.5	-774.4	7350.0
1	94	33825.5	-2706.0	519.0	261.9	-1831.0	-12906.8
	116	-31225.5	2706.0	-519.0	-261.9	1312.0	10200.8
2	94	32552.5	-4714.9	580.6	1254.9	-1784.0	-22563.5
	116	-29952.5	4714.9	-580.6	-1254.9	1203.5	17848.6
3	94	37793.0	-2763.9	580.9	72.5	-2096.9	-13282.8
	116	-35193.0	2763.9	-580.9	-72.5	1516.0	10518.8
4	94	32647.8	257.2	-1079.3	-1147.3	-2676.4	967.4
	116	-30047.8	-257.2	1079.3	1147.3	3755.7	-710.2
5	94	18894.0	81.2	989.4	-603.5	1488.7	-142.6
	116	-16894.0	-81.2	-989.4	603.5	-1811.1	236.2
6	94	19489.0	-1153.5	42.3	-1763.0	487.6	-6410.8
	116	-17489.0	1153.5	-42.3	1763.0	-505.4	5308.7
7	94	24849.5	-1780.1	366.8	116.6	-1304.8	-8546.7
	116	-22849.5	1780.1	-366.8	-116.6	938.0	6766.6
8	94	24000.8	-3119.4	407.8	778.6	-1273.5	-14984.4
	116	-22000.8	3119.4	-407.8	-778.6	865.6	11865.1
9	94	27494.5	-1818.7	408.1	-9.7	-1482.1	-8797.3
	116	-25494.5	1818.7	-408.1	9.7	1074.0	6978.6

Comb.	Nodo	N [kg]	T1-2 [kg]	T1-3 [kg]	Mt [kgm]	M1-3 [kgm]	M1-2 [kgm]
10	94	24064.4	195.4	-698.8	-822.9	-1868.4	702.9
	116	-22064.4	-195.4	698.8	822.9	2567.1	-507.5
11	94	27164.6	167.6	318.7	-921.7	-1389.2	621.2
	116	-25164.6	-167.6	-318.7	921.7	1070.5	-453.6
12	94	26918.4	-499.5	342.3	-599.7	-1389.1	-2571.2
	116	-24918.4	499.5	-342.3	599.7	1046.7	2071.7
13	94	20866.6	200.2	216.9	-615.2	-925.3	715.2
	116	-18866.6	-200.2	-216.9	615.2	708.4	-515.0
14	94	26931.1	163.4	121.0	-920.0	-1508.1	566.2
	116	-24931.1	-163.4	-121.0	920.0	1387.0	-402.8
15	94	21355.9	-3080.8	366.5	904.9	-1096.2	-14733.8
	116	-19355.9	3080.8	-366.5	-904.9	729.6	11653.1
16	94	18851.4	61.8	1083.5	-604.2	1874.6	-320.8
	116	-16851.4	-61.8	-1083.5	604.2	-2106.9	396.4
17	94	19494.7	-1295.5	31.8	-1862.3	694.4	-7349.3
	116	-17494.7	1295.5	-31.8	1862.3	-655.4	6111.6
1	116	31070.7	-2521.5	269.0	136.1	-1462.3	-10187.5
	137	-28470.7	2521.5	-269.0	-136.1	1193.3	7666.0
2	116	29809.8	-4407.9	203.5	1046.6	-1338.6	-17825.9
	137	-27209.8	4407.9	-203.5	-1046.6	1135.1	13418.0
3	116	35020.2	-2579.3	320.0	-53.5	-1688.9	-10505.6
	137	-32420.2	2579.3	-320.0	53.5	1368.9	7926.3
4	116	30004.8	258.8	-1501.6	-1150.9	-3767.2	709.7
	137	-27404.8	-258.8	1501.6	1150.9	5268.9	-451.0
5	116	16739.7	80.0	1156.6	-604.8	1671.4	-236.3
	137	-14739.7	-80.0	-1156.6	604.8	-2588.8	1907.4
6	116	17380.0	-1098.9	24.1	-1764.3	406.9	-5308.4
	137	-15380.0	1098.9	-24.1	1764.3	-920.1	4738.0
7	116	22736.2	-1657.0	196.4	32.6	-1046.5	-6757.7
	137	-20736.2	1657.0	-196.4	-32.6	850.1	5100.7
8	116	21895.5	-2914.6	152.7	639.6	-964.0	-11850.0
	137	-19895.5	2914.6	-152.7	-639.6	811.3	8935.3
9	116	25369.1	-1695.6	230.4	-93.8	-1197.5	-6969.8
	137	-23369.1	1695.6	-230.4	93.8	967.2	5274.2
10	116	22025.6	196.5	-984.0	-825.4	-2583.1	507.1
	137	-20025.6	-196.5	984.0	825.4	3567.2	-310.6
11	116	25036.7	168.2	270.1	-923.2	-1197.3	453.1
	137	-23036.7	-168.2	-270.1	923.2	927.2	-284.9
12	116	24793.4	-458.1	251.1	-628.7	-1169.8	-2069.1
	137	-22793.4	458.1	-251.1	628.7	918.7	1611.0
13	116	18770.2	200.7	182.5	-616.4	-795.9	514.7
	137	-16770.2	-200.7	-182.5	616.4	613.3	-314.0
14	116	24819.4	164.2	23.8	-921.7	-1493.7	402.4
	137	-22819.4	-164.2	-23.8	921.7	1469.9	-238.2
15	116	19262.5	-2876.1	118.7	766.0	-813.0	-11637.9
	137	-17262.5	2876.1	-118.7	-766.0	694.2	8761.8

Comb.	Nodo	N [kg]	T1-2 [kg]	T1-3 [kg]	Mt [kgm]	M1-3 [kgm]	M1-2 [kgm]
16	116	16692.0	58.7	1262.7	-605.6	1966.3	-396.4
	137	-14692.0	-58.7	-1262.7	605.6	-2868.1	2178.3
17	116	17384.8	-1242.5	14.1	-1863.6	557.1	-6111.4
	137	-15384.8	1242.5	-14.1	1863.6	-1053.5	5442.0
1	137	28317.1	-2324.6	148.3	-10.2	-1343.0	-7657.5
	161	-25717.1	2324.6	-148.3	10.2	1194.6	5332.9
2	137	27068.1	-4080.2	-99.1	803.7	-1269.7	-13403.4
	161	-24468.1	4080.2	99.1	-803.7	1368.8	9323.3
3	137	32248.8	-2382.3	218.6	-199.9	-1541.0	-7918.0
	161	-29648.8	2382.3	-218.6	199.9	1322.4	5535.6
4	137	27355.7	260.1	-1371.6	-1154.4	-5287.5	450.6
	161	-24755.7	-260.1	1371.6	1154.4	6659.1	-190.5
5	137	14590.8	80.2	1199.9	-606.1	2435.7	-1907.6
	161	-12590.8	-80.2	-1199.9	606.1	-3108.6	1482.2
6	137	15274.2	-1032.6	100.0	-1765.8	803.1	-4738.1
	161	-13274.2	1032.6	-100.0	1765.8	176.5	3615.2
7	137	20623.6	-1525.7	122.7	-65.1	-958.2	-5095.0
	161	-18623.6	1525.7	-122.7	65.1	835.5	3569.4
8	137	19790.9	-2696.1	-42.3	477.6	-909.3	-8925.7
	161	-17790.9	2696.1	42.3	-477.6	951.6	6229.6
9	137	23244.7	-1564.2	169.5	-191.6	-1090.2	-5268.7
	161	-21244.7	1564.2	-169.5	191.6	920.7	3704.5
10	137	19982.6	197.5	-890.6	-827.9	-3587.8	310.4
	161	-17982.6	-197.5	890.6	827.9	4478.5	-112.9
11	137	22909.8	168.7	379.7	-924.4	-1053.4	284.5
	161	-20909.8	-168.7	-379.7	924.4	673.7	-115.7
12	137	22669.4	-413.9	301.4	-662.1	-1041.2	-1609.4
	161	-20669.4	413.9	-301.4	662.1	739.9	1195.5
13	137	16674.4	201.2	256.8	-617.4	-700.3	313.8
	161	-14674.4	-201.2	-256.8	617.4	443.5	-112.6
14	137	22707.8	164.8	131.7	-923.2	-1576.9	237.8
	161	-20707.8	-164.8	-131.7	923.2	1445.2	-73.0
15	137	17169.8	-2657.6	-89.1	604.1	-777.3	-8752.0
	161	-15169.8	2657.6	89.1	-604.1	866.4	6094.5
16	137	14538.3	57.3	1304.8	-606.9	2710.6	-2178.6
	161	-12538.3	-57.3	-1304.8	606.9	-3389.4	1689.0
17	137	15278.3	-1176.0	91.2	-1865.2	934.4	-5442.1
	161	-13278.3	1176.0	-91.2	1865.2	162.3	4168.0
1	161	25575.0	-2191.5	54.7	-138.5	-1341.9	-5329.9
	169	-19256.8	1848.2	-54.7	138.5	1210.6	482.3
2	161	24338.0	-3858.7	-450.3	590.8	-1500.8	-9317.9
	169	-18019.9	3286.4	450.3	-590.8	2581.5	743.8
3	161	29487.8	-2249.2	136.0	-328.2	-1493.0	-5532.7
	169	-23169.7	1905.9	-136.0	328.2	1166.7	546.6
4	161	24713.4	261.5	-1144.2	-1157.8	-6681.3	190.1

Comb.	Nodo	N [kg]	T1-2 [kg]	T1-3 [kg]	Mt [kgm]	M1-3 [kgm]	M1-2 [kgm]
	169	-18395.3	-261.5	1144.2	1157.8	9427.5	437.4
5	161	12456.4	82.8	1277.5	-607.4	2970.7	-1482.6
	169	-7596.4	-82.8	-1277.5	607.4	-5806.4	165.6
6	161	13180.7	-901.7	289.6	-1767.4	-251.2	-3615.6
	169	-8320.6	901.7	-289.6	1767.4	-458.0	-752.0
7	161	18520.3	-1436.9	83.2	-150.7	-941.3	-3567.4
	169	-13660.2	1208.0	-83.2	150.7	741.6	393.5
8	161	17695.6	-2548.3	-253.4	335.5	-1047.3	-6226.0
	169	-12835.6	2166.8	253.4	-335.5	1655.5	567.9
9	161	21128.8	-1475.4	137.4	-277.3	-1042.1	-3702.6
	169	-16268.7	1246.5	-137.4	277.3	712.4	436.4
10	161	17945.9	198.4	-716.1	-830.3	-4500.9	112.6
	169	-13085.9	-198.4	716.1	830.3	6219.5	363.6
11	161	20791.7	169.2	595.2	-925.4	-797.9	115.3
	169	-15931.7	-169.2	-595.2	925.4	-630.4	290.8
12	161	20554.3	-384.0	432.1	-691.4	-860.4	-1195.1
	169	-15694.2	307.7	-432.1	691.4	-176.6	365.1
13	161	14589.3	201.7	447.7	-618.5	-526.9	112.4
	169	-9729.2	-201.7	-447.7	618.5	-547.5	371.6
14	161	20604.4	165.3	339.6	-924.5	-1551.1	72.6
	169	-15744.3	-165.3	-339.6	924.5	736.2	324.2
15	161	15087.1	-2509.8	-307.6	462.0	-946.5	-6090.8
	169	-10227.0	2128.3	307.6	-462.0	1684.8	525.0
16	161	12399.5	58.0	1374.7	-608.2	3246.7	-1689.3
	169	-7539.4	-58.0	-1374.7	608.2	-6239.4	123.5
17	161	13184.3	-1041.2	281.3	-1866.7	-236.9	-4168.4
	169	-8324.2	1041.2	-281.3	1866.7	-441.9	-946.0
1	169	17503.6	-2180.7	9929.3	3967.3	-1210.6	351.6
	192	-8710.9	1702.9	-9929.3	-3967.3	-31953.2	-6837.3
2	169	16266.8	-3783.7	10105.5	4719.7	-2581.5	96.6
	192	-7474.1	2987.3	-10105.5	-4719.7	-31170.8	-11404.0
3	169	21416.2	-2236.5	10763.5	4117.4	-1166.7	287.5
	192	-12623.5	1758.6	-10763.5	-4117.4	-34783.5	-6959.3
4	169	16635.9	217.2	7546.0	2849.7	-9427.5	386.9
	192	-7843.2	-217.2	-7546.0	-2849.7	-15776.3	338.4
5	169	6249.8	-245.1	5829.8	1464.9	5806.4	466.7
	192	513.8	245.1	-5829.8	-1464.9	-26049.7	-952.9
6	169	6967.1	-696.0	5591.9	304.3	458.0	1383.2
	192	-203.5	696.0	-5591.9	-304.3	-21940.3	-2122.4
7	169	12311.5	-1437.3	7185.3	2826.0	-741.6	246.8
	192	-5547.9	1118.7	-7185.3	-2826.0	-23257.3	-4515.3
8	169	11487.0	-2505.9	7302.8	3327.6	-1655.5	76.8
	192	-4723.3	1974.9	-7302.8	-3327.6	-22735.7	-7559.8
9	169	14919.9	-1474.4	7741.5	2926.0	-712.4	204.1
	192	-8156.3	1155.9	-7741.5	-2926.0	-25144.2	-4596.6
10	169	11733.0	161.3	5596.5	2080.9	-6219.5	270.4

Comb.	Nodo	N [kg]	T1-2 [kg]	T1-3 [kg]	Mt [kgm]	M1-3 [kgm]	M1-2 [kgm]
	192	-4969.4	-161.3	-5596.5	-2080.9	-12472.7	268.5
11	169	14582.7	108.3	6997.1	2015.3	630.4	343.0
	192	-7819.0	-108.3	-6997.1	-2015.3	-24000.9	18.6
12	169	14345.3	-423.8	7119.0	2283.7	176.6	270.9
	192	-7581.7	317.6	-7119.0	-2283.7	-23954.0	-1509.0
13	169	8380.4	141.7	5374.9	1651.2	547.5	261.8
	192	-1616.8	-141.7	-5374.9	-1651.2	-18499.8	211.4
14	169	14394.5	109.7	6777.7	2034.3	-736.2	309.6
	192	-7630.9	-109.7	-6777.7	-2034.3	-21901.4	56.7
15	169	8878.6	-2468.7	6746.6	3227.5	-1684.8	119.6
	192	-2115.0	1937.8	-6746.6	-3227.5	-20848.8	-7478.5
16	169	6193.5	-287.9	5914.2	1457.1	6239.4	508.8
	192	570.1	287.9	-5914.2	-1457.1	-26814.4	-1056.0
17	169	6971.2	-799.6	5658.9	192.3	441.9	1576.8
	192	-207.6	799.6	-5658.9	-192.3	-22359.8	-2332.2
1	7	9738.9	-418.2	-5.3	-0.1	23.1	-1771.2
	39	-9052.4	418.2	5.3	0.1	24.7	-1972.1
2	7	11369.1	-645.2	-6.1	-0.2	24.3	-2775.8
	39	-10682.6	645.2	6.1	0.2	30.0	-2998.9
3	7	9463.6	-416.2	-5.2	-0.1	22.3	-1767.6
	39	-8777.2	416.2	5.2	0.1	24.3	-1957.6
4	7	6127.6	-102.7	-2038.6	-0.7	3459.6	-380.4
	39	-5441.1	102.7	-1921.8	0.7	-2936.9	-539.1
5	7	4028.6	-42.4	26.1	-0.0	-220.9	-152.4
	39	-3500.6	42.4	-26.1	0.0	-25.1	-226.7
6	7	5115.8	-148.5	9.7	-0.2	-87.5	-615.9
	39	-4587.8	148.5	-9.7	0.2	-10.6	-713.1
7	7	6947.2	-282.2	-3.8	-0.1	16.3	-1192.5
	39	-6419.1	282.2	3.8	0.1	17.6	-1333.7
8	7	8034.0	-433.6	-4.3	-0.1	17.2	-1862.2
	39	-7506.0	433.6	4.3	0.1	21.2	-2018.2
9	7	6763.7	-280.9	-3.7	-0.1	15.8	-1190.0
	39	-6235.7	280.9	3.7	0.1	17.4	-1324.0
10	7	4539.7	-71.9	-1359.3	-0.4	2307.3	-265.2
	39	-4011.6	71.9	-1281.0	0.4	-1956.8	-378.3
11	7	4595.9	-46.0	-2.6	-0.0	12.3	-159.0
	39	-4067.8	46.0	2.6	0.0	11.0	-252.3
12	7	5199.0	-122.5	-2.9	-0.1	13.0	-496.8
	39	-4671.0	122.5	2.9	0.1	12.9	-599.6
13	7	4196.5	-37.8	-2.3	-0.0	10.4	-128.7
	39	-3668.5	37.8	2.3	0.0	10.1	-209.9
14	7	4500.2	-50.2	-273.9	-0.1	471.0	-177.4
	39	-3972.1	50.2	-254.2	0.1	-382.7	-271.6
15	7	8217.5	-434.9	-4.4	-0.1	17.7	-1864.6
	39	-7689.4	434.9	4.4	0.1	21.5	-2027.8
16	7	4021.9	-43.1	28.6	-0.1	-239.9	-155.6

Comb.	Nodo	N [kg]	T1-2 [kg]	T1-3 [kg]	Mt [kgm]	M1-3 [kgm]	M1-2 [kgm]
	39	-3493.8	43.1	-28.6	0.1	-30.8	-229.6
17	7	5199.7	-158.4	10.8	-0.2	-95.7	-659.3
	39	-4671.7	158.4	-10.8	0.2	-13.8	-758.1
1	39	1667.0	-1248.5	-0.4	0.0	2.1	-3579.3
	85	-1417.7	1248.5	0.4	-0.0	-1.0	-478.2
2	39	1375.8	-1866.2	-3.4	0.0	15.3	-5376.5
	85	-1126.5	1866.2	3.4	-0.0	-4.1	-688.6
3	39	1647.4	-1239.6	-0.6	0.0	2.4	-3559.0
	85	-1398.1	1239.6	0.6	-0.0	-0.5	-469.6
4	39	1953.5	-380.7	-2260.6	-13.7	4648.0	-1050.0
	85	-1704.2	380.7	822.5	13.7	362.0	-187.3
5	39	1285.5	-163.9	21.3	-0.2	48.3	-456.0
	85	-1093.7	163.9	-21.3	0.2	-35.5	-77.5
6	39	1232.7	-448.5	1.2	-0.3	33.6	-1274.5
	85	-1040.9	448.5	-1.2	0.3	-16.2	-189.2
7	39	1274.8	-846.5	0.0	0.0	0.4	-2425.5
	85	-1083.0	846.5	-0.0	-0.0	-0.5	-325.5
8	39	1080.7	-1258.3	-2.0	0.0	9.1	-3623.6
	85	-888.9	1258.3	2.0	-0.0	-2.6	-465.7
9	39	1261.7	-840.5	-0.1	0.0	0.5	-2412.0
	85	-1070.0	840.5	0.1	-0.0	-0.1	-319.7
10	39	1465.8	-267.9	-1506.8	-9.1	3097.6	-739.3
	85	-1274.0	267.9	548.1	9.1	241.5	-131.5
11	39	1462.1	-189.8	2.6	0.0	-11.3	-525.6
	85	-1270.3	189.8	-2.6	-0.0	2.7	-91.1
12	39	1375.1	-399.3	1.7	0.0	-7.1	-1134.6
	85	-1183.4	399.3	-1.7	-0.0	1.7	-163.2
13	39	1365.9	-156.6	2.5	0.0	-9.9	-432.2
	85	-1174.2	156.6	-2.5	-0.0	1.8	-76.7
14	39	1452.1	-201.3	-299.3	-1.8	610.6	-557.7
	85	-1260.4	201.3	107.6	1.8	50.5	-96.4
15	39	1093.7	-1264.2	-1.9	0.0	9.0	-3637.2
	85	-901.9	1264.2	1.9	-0.0	-2.9	-471.4
16	39	1277.5	-165.2	22.5	0.1	53.2	-459.7
	85	-1085.8	165.2	-22.5	-0.1	-40.2	-78.2
17	39	1217.4	-473.6	1.0	-0.3	37.4	-1346.5
	85	-1025.6	473.6	-1.0	0.3	-18.5	-200.4
1	85	1340.8	61.7	-0.9	0.1	1.3	335.1
	106	-1340.8	-61.7	0.9	-0.1	-0.4	-273.4
2	85	1061.1	52.4	-3.5	0.1	4.7	467.9
	106	-1061.1	-52.4	3.5	-0.1	-1.3	-415.5
3	85	1322.0	57.0	-1.2	0.1	0.8	326.6
	106	-1322.0	-57.0	1.2	-0.1	0.3	-269.5
4	85	1612.5	73.9	-776.2	-16.8	-319.2	153.5
	106	-1612.5	-73.9	776.2	16.8	1095.4	-79.6

Comb.	Nodo	N [kg]	T1-2 [kg]	T1-3 [kg]	Mt [kgm]	M1-3 [kgm]	M1-2 [kgm]
5	85	1024.7	38.6	15.8	-0.0	35.1	64.0
	106	-1024.7	-38.6	-15.8	0.0	-48.0	-26.1
6	85	974.3	49.5	0.4	0.3	16.2	145.1
	106	-974.3	-49.5	-0.4	-0.3	-20.6	-100.2
7	85	1022.6	45.0	-0.4	0.1	0.7	228.9
	106	-1022.6	-45.0	0.4	-0.1	-0.3	-183.9
8	85	836.1	38.9	-2.1	0.1	3.0	317.5
	106	-836.1	-38.9	2.1	-0.1	-0.9	-278.6
9	85	1010.0	41.9	-0.6	0.1	0.4	223.2
	106	-1010.0	-41.9	0.6	-0.1	0.2	-181.3
10	85	1203.7	53.2	-517.3	-11.2	-213.0	107.9
	106	-1203.7	-53.2	517.3	11.2	730.3	-54.7
11	85	1199.8	43.9	1.8	0.1	-2.7	74.9
	106	-1199.8	-43.9	-1.8	-0.1	1.0	-30.9
12	85	1116.6	41.6	0.9	0.1	-1.6	120.9
	106	-1116.6	-41.6	-0.9	-0.1	0.7	-79.2
13	85	1104.0	39.6	1.8	0.1	-1.8	64.0
	106	-1104.0	-39.6	-1.8	-0.1	0.1	-24.4
14	85	1190.1	44.5	-102.1	-2.2	-44.8	79.0
	106	-1190.1	-44.5	102.1	2.2	146.9	-34.5
15	85	848.7	42.0	-2.0	0.1	3.3	323.1
	106	-848.7	-42.0	2.0	-0.1	-1.3	-281.2
16	85	1016.8	38.8	16.7	-0.0	39.8	64.7
	106	-1016.8	-38.8	-16.7	0.0	-52.7	-26.7
17	85	959.2	51.3	0.2	0.3	18.5	154.2
	106	-959.2	-51.3	-0.2	-0.3	-22.7	-108.0
1	106	1224.3	68.2	-1.1	0.1	0.8	136.5
	128	-1224.3	-68.2	1.1	-0.1	0.2	-68.4
2	106	954.9	90.4	-2.9	0.0	2.1	204.5
	128	-954.9	-90.4	2.9	-0.0	0.8	-114.1
3	106	1206.2	66.7	-1.3	0.1	0.2	132.7
	128	-1206.2	-66.7	1.3	-0.1	1.1	-66.0
4	106	1482.7	37.5	-572.5	-14.5	-1057.0	47.7
	128	-1482.7	-37.5	572.5	14.5	1629.5	-10.3
5	106	926.3	14.0	12.7	-0.0	47.5	13.7
	128	-926.3	-14.0	-12.7	0.0	-59.7	0.3
6	106	877.9	31.8	-0.2	0.3	20.3	61.5
	128	-877.9	-31.8	0.2	-0.3	-27.3	-30.2
7	106	931.8	46.5	-0.6	0.1	0.6	91.6
	128	-931.8	-46.5	0.6	-0.1	-0.0	-45.1
8	106	752.2	61.3	-1.8	0.0	1.5	136.9
	128	-752.2	-61.3	1.8	-0.0	0.4	-75.5
9	106	919.7	45.5	-0.7	0.1	0.1	89.0
	128	-919.7	-45.5	0.7	-0.1	0.6	-43.5
10	106	1104.0	26.0	-381.5	-9.6	-704.7	32.4
	128	-1104.0	-26.0	381.5	9.6	1086.2	-6.4

Comb.	Nodo	N [kg]	T1-2 [kg]	T1-3 [kg]	Mt [kgm]	M1-3 [kgm]	M1-2 [kgm]
11	106	1100.0	18.8	1.0	0.1	-1.0	15.4
	128	-1100.0	-18.8	-1.0	-0.1	-0.0	3.4
12	106	1020.2	26.7	0.4	0.1	-0.6	38.7
	128	-1020.2	-26.7	-0.4	-0.1	0.2	-12.0
13	106	1004.7	14.6	1.2	0.1	-0.1	12.2
	128	-1004.7	-14.6	-1.2	-0.1	-1.0	2.4
14	106	1090.5	19.6	-75.5	-1.9	-141.8	17.8
	128	-1090.5	-19.6	75.5	1.9	217.3	1.8
15	106	764.3	62.3	-1.6	0.0	1.9	139.4
	128	-764.3	-62.3	1.6	-0.0	-0.3	-77.1
16	106	918.5	14.2	13.5	-0.0	52.2	14.3
	128	-918.5	-14.2	-13.5	0.0	-64.7	-0.2
17	106	863.0	34.0	-0.3	0.3	22.5	67.9
	128	-863.0	-34.0	0.3	-0.3	-29.5	-34.6
1	128	1107.0	12.6	-1.1	0.1	0.4	-66.4
	149	-1107.0	-12.6	1.1	-0.1	0.6	79.0
2	128	847.4	-4.2	-2.4	0.0	0.3	-93.6
	149	-847.4	4.2	2.4	-0.0	2.1	89.4
3	128	1089.6	12.8	-1.4	0.1	-0.5	-68.9
	149	-1089.6	-12.8	1.4	-0.1	1.9	81.7
4	128	1352.9	30.3	-421.5	-10.3	-1599.8	-21.2
	149	-1352.9	-30.3	421.5	10.3	2021.3	51.5
5	128	827.9	11.6	9.4	-0.0	59.3	3.5
	149	-827.9	-11.6	-9.4	0.0	-61.4	28.7
6	128	781.3	16.4	-0.7	0.3	26.9	22.6
	149	-781.3	-16.4	0.7	-0.3	-8.6	54.4
7	128	840.5	9.1	-0.6	0.1	0.5	-45.9
	149	-840.5	-9.1	0.6	-0.1	0.2	54.9
8	128	667.5	-2.1	-1.5	0.0	0.4	-64.0
	149	-667.5	2.1	1.5	-0.0	1.1	61.8
9	128	828.9	9.2	-0.8	0.1	-0.2	-47.5
	149	-828.9	-9.2	0.8	-0.1	1.0	56.7
10	128	1004.5	20.8	-280.9	-6.8	-1066.4	-15.7
	149	-1004.5	-20.8	280.9	6.8	1347.2	36.5
11	128	1000.4	20.6	0.5	0.1	-0.0	-19.0
	149	-1000.4	-20.6	-0.5	-0.1	-0.4	39.6
12	128	923.7	15.6	0.0	0.1	-0.1	-28.2
	149	-923.7	-15.6	-0.0	-0.1	0.0	43.8
13	128	905.4	13.6	0.7	0.1	1.0	-14.7
	149	-905.4	-13.6	-0.7	-0.1	-1.7	28.2
14	128	991.0	20.2	-55.9	-1.3	-213.4	-18.6
	149	-991.0	-20.2	55.9	1.3	269.3	38.8
15	128	679.1	-2.2	-1.3	-0.0	1.0	-62.3
	149	-679.1	2.2	1.3	0.0	0.3	60.1
16	128	820.2	11.7	10.1	-0.0	64.2	5.8
	149	-820.2	-11.7	-10.1	0.0	-66.0	8.4

Comb.	Nodo	N [kg]	T1-2 [kg]	T1-3 [kg]	Mt [kgm]	M1-3 [kgm]	M1-2 [kgm]
17	128	766.5	17.2	-0.8	0.3	29.2	27.6
	149	-766.5	-17.2	0.8	-0.3	-9.0	-11.0
1	149	989.8	62.2	-1.4	0.1	0.1	-215.8
	162	-989.8	-62.2	1.4	-0.1	1.3	278.0
2	149	740.2	32.9	-2.6	-0.0	-0.8	-299.5
	162	-740.2	-32.9	2.6	0.0	3.4	332.4
3	149	973.2	62.1	-1.7	0.1	-1.1	-218.6
	162	-973.2	-62.1	1.7	-0.1	2.8	280.6
4	149	1223.1	87.9	-307.8	-4.2	-2003.3	-83.9
	162	-1223.1	-87.9	307.8	4.2	2311.1	171.7
5	149	729.4	38.9	-7.0	-0.0	68.6	-41.9
	162	-729.4	-38.9	7.0	0.0	-65.2	83.7
6	149	684.5	37.1	-4.9	0.3	33.0	-93.6
	162	-684.5	-37.1	4.9	-0.3	-7.7	136.0
7	149	749.3	45.1	-0.9	0.0	0.3	-147.2
	162	-749.3	-45.1	0.9	-0.0	0.5	192.3
8	149	582.9	25.6	-1.7	0.0	-0.3	-203.0
	162	-582.9	-25.6	1.7	-0.0	1.9	228.6
9	149	738.3	45.0	-1.1	0.1	-0.5	-149.1
	162	-738.3	-45.0	1.1	-0.1	1.6	194.1
10	149	904.9	62.2	-205.2	-2.8	-1335.2	-59.3
	162	-904.9	-62.2	205.2	2.8	1540.4	121.5
11	149	900.7	62.2	0.1	0.1	0.4	-56.0
	162	-900.7	-62.2	-0.1	-0.1	-0.5	118.2
12	149	827.2	53.8	-0.3	0.1	0.1	-85.0
	162	-827.2	-53.8	0.3	-0.1	0.2	138.8
13	149	806.1	46.7	0.4	0.1	1.7	-41.0
	162	-806.1	-46.7	-0.4	-0.1	-2.0	87.7
14	149	891.6	61.1	-41.0	-0.5	-266.9	-56.2
	162	-891.6	-61.1	41.0	0.5	307.9	117.3
15	149	594.0	25.6	-1.4	-0.0	0.5	-201.2
	162	-594.0	-25.6	1.4	0.0	0.9	226.8
16	149	721.7	38.4	-7.8	-0.0	73.7	-42.4
	162	-721.7	-38.4	7.8	0.0	-69.8	84.0
17	149	669.8	36.3	-5.4	0.3	35.5	-99.1
	162	-669.8	-36.3	5.4	-0.3	-8.0	141.6
1	162	911.8	-414.8	-2.2	0.2	-0.4	-420.4
	195	-471.5	414.8	2.2	-0.2	13.1	-1960.6
2	162	672.8	-591.5	-3.9	0.1	-2.0	-549.9
	195	-232.6	591.5	3.9	-0.1	24.2	-2845.6
3	162	896.0	-416.4	-2.6	0.2	-2.0	-423.4
	195	-455.7	416.4	2.6	-0.2	16.9	-1966.6
4	162	1131.5	-150.1	-436.3	12.4	-2307.2	-206.8
	195	-691.3	150.1	-2103.7	-12.4	-2478.3	-654.9
5	162	660.2	-69.0	-10.0	0.2	65.3	-98.5

Comb.	Nodo	N [kg]	T1-2 [kg]	T1-3 [kg]	Mt [kgm]	M1-3 [kgm]	M1-2 [kgm]
	195	-321.5	69.0	10.0	-0.2	-27.6	-297.8
6	162	616.9	-158.8	-4.4	0.3	8.0	-182.5
	195	-278.2	158.8	4.4	-0.3	1.2	-731.3
7	162	688.2	-282.3	-1.5	0.1	0.0	-288.5
	195	-349.5	282.3	1.5	-0.1	8.3	-1332.0
8	162	528.9	-400.1	-2.6	0.1	-1.0	-374.8
	195	-190.2	400.1	2.6	-0.1	15.7	-1922.0
9	162	677.6	-283.4	-1.7	0.1	-1.0	-290.5
	195	-339.0	283.4	1.7	-0.1	10.9	-1336.0
10	162	834.7	-105.9	-290.8	8.3	-1537.8	-146.1
	195	-496.0	105.9	-1402.5	-8.3	-1652.6	-461.5
11	162	830.4	-90.9	-0.2	0.1	0.5	-136.5
	195	-491.7	90.9	0.2	-0.1	0.4	-385.3
12	162	760.3	-151.6	-0.7	0.1	-0.0	-182.4
	195	-421.7	151.6	0.7	-0.1	4.0	-687.6
13	162	736.1	-69.0	0.2	0.1	2.1	-101.8
	195	-397.5	69.0	-0.2	-0.1	-2.9	-294.0
14	162	821.5	-92.7	-58.4	1.8	-307.4	-136.7
	195	-482.8	92.7	-280.3	-1.8	-329.6	-395.5
15	162	539.4	-399.1	-2.3	0.1	0.0	-372.9
	195	-200.8	399.1	2.3	-0.1	13.1	-1918.0
16	162	652.6	-69.3	-10.6	0.2	69.9	-99.0
	195	-313.9	69.3	10.6	-0.2	-29.4	-299.5
17	162	602.3	-166.8	-4.7	0.4	8.3	-190.6
	195	-263.6	166.8	4.7	-0.4	1.7	-769.8
1	11	39590.6	-4158.3	76.0	635.5	-156.3	-35250.0
	58	-8260.6	4158.3	-76.0	-635.5	-760.0	-14857.7
2	11	36111.0	-6851.0	82.0	1080.2	-166.4	-57315.2
	58	-4781.0	6851.0	-82.0	-1080.2	-821.1	-25239.9
3	11	38633.6	-4154.1	72.6	648.4	-145.5	-35286.7
	58	-7303.6	4154.1	-72.6	-648.4	-728.8	-14770.2
4	11	42259.6	338.2	-1838.3	256.3	20665.8	2068.0
	58	-10929.6	-338.2	1838.3	-256.3	1485.3	2007.8
5	11	31909.1	-1543.9	1233.4	-104.6	-13180.2	-13639.2
	58	-7809.1	1543.9	-1233.4	104.6	-1735.4	-4976.0
6	11	29871.5	-2895.2	539.9	582.9	-5546.8	-24678.4
	58	-5771.5	2895.2	-539.9	-582.9	-1125.7	-10215.4
7	11	30502.1	-2777.2	57.0	415.2	-138.1	-23639.2
	58	-6402.1	2777.2	-57.0	-415.2	-548.7	-9825.7
8	11	28182.3	-4572.3	60.9	711.6	-144.9	-38349.4
	58	-4082.3	4572.3	-60.9	-711.6	-589.4	-16747.2
9	11	29864.0	-2774.4	54.7	423.8	-130.9	-23663.7
	58	-5764.0	2774.4	-54.7	-423.8	-527.9	-9767.4
10	11	32281.4	220.5	-1219.2	162.4	13743.3	1239.4
	58	-8181.4	-220.5	1219.2	-162.4	948.2	1418.0
11	11	32364.7	-68.8	47.2	-27.5	-151.4	-1468.5

Comb.	Nodo	N [kg]	T1-2 [kg]	T1-3 [kg]	Mt [kgm]	M1-3 [kgm]	M1-2 [kgm]
	58	-8264.7	68.8	-47.2	27.5	-417.1	639.9
12	11	31313.6	-967.8	49.3	121.5	-151.4	-8838.0
	58	-7213.6	967.8	-49.3	-121.5	-442.9	-2823.6
13	11	32123.8	-56.7	48.9	-49.7	-202.4	-1261.9
	58	-8023.8	56.7	-48.9	49.7	-386.3	578.9
14	11	32133.4	-9.2	-206.7	11.6	2626.3	-920.3
	58	-8033.4	9.2	206.7	-11.6	-135.4	809.5
15	11	28820.4	-4575.1	63.3	703.1	-152.1	-38324.9
	58	-4720.4	4575.1	-63.3	-703.1	-610.2	-16805.5
16	11	31892.5	-1663.8	1328.6	-108.7	-14222.1	-14640.4
	58	-7792.5	1663.8	-1328.6	108.7	-1846.0	-5420.7
17	11	29691.7	-3124.5	579.4	635.4	-5975.7	-26577.6
	58	-5591.7	3124.5	-579.4	-635.4	-1186.4	-11081.3
1	12	3369.7	-336.8	-7.3	0.0	33.5	-1531.9
	40	-2683.2	336.8	7.3	-0.0	32.0	-1482.7
2	12	1457.0	-579.3	-9.1	0.0	40.5	-2582.3
	40	-770.5	579.3	9.1	-0.0	40.9	-2602.4
3	12	3156.4	-340.7	-7.3	0.0	33.3	-1545.7
	40	-2469.9	340.7	7.3	-0.0	32.3	-1503.8
4	12	4771.6	-7.7	-2028.6	0.7	3428.5	-101.5
	40	-4085.1	7.7	-1931.8	-0.7	-2995.2	32.9
5	12	3863.1	11.1	27.2	-0.1	-220.1	5.0
	40	-3335.1	-11.1	-27.2	0.1	-24.2	94.0
6	12	3191.0	-96.2	10.2	-0.2	-85.7	-462.2
	40	-2662.9	96.2	-10.2	0.2	7.6	-399.2
7	12	2710.4	-222.3	-5.1	0.0	23.4	-1016.1
	40	-2182.3	222.3	5.1	-0.0	22.5	-973.2
8	12	1435.3	-383.9	-6.3	0.0	28.0	-1716.4
	40	-907.2	383.9	6.3	-0.0	28.4	-1719.7
9	12	2568.2	-224.9	-5.1	0.0	23.3	-1025.3
	40	-2040.1	224.9	5.1	-0.0	22.7	-987.3
10	12	3645.0	-2.8	-1352.6	0.5	2286.7	-62.6
	40	-3116.9	2.8	-1287.6	-0.5	-1995.6	37.2
11	12	4150.3	16.1	-3.0	0.0	14.1	23.8
	40	-3622.2	-16.1	3.0	-0.0	12.7	120.6
12	12	3549.5	-64.5	-3.6	0.0	16.6	-326.2
	40	-3021.4	64.5	3.6	-0.0	15.8	-251.3
13	12	3951.7	18.4	-2.5	0.0	11.4	36.8
	40	-3423.7	-18.4	2.5	-0.0	10.8	127.8
14	12	3991.4	11.7	-272.9	0.1	468.4	4.6
	40	-3463.4	-11.7	-255.2	-0.1	-389.0	100.1
15	12	1577.5	-381.3	-6.3	0.0	28.1	-1707.3
	40	-1049.4	381.3	6.3	-0.0	28.2	-1705.6
16	12	3858.1	10.2	29.7	-0.1	-239.0	1.4
	40	-3330.1	-10.2	-29.7	0.1	-28.7	90.3
17	12	3129.4	-106.4	11.3	-0.2	-93.7	-506.3

Comb.	Nodo	N [kg]	T1-2 [kg]	T1-3 [kg]	Mt [kgm]	M1-3 [kgm]	M1-2 [kgm]
	40	-2601.3	106.4	-11.3	0.2	7.1	-445.7
1	40	1972.3	-784.6	1.0	-0.0	-13.8	-2418.5
	86	-1723.0	784.6	-1.0	0.0	10.5	-131.6
2	40	2041.6	-1430.7	-0.6	-0.0	-8.7	-4330.9
	86	-1792.4	1430.7	0.6	0.0	10.7	-318.9
3	40	1954.8	-803.6	0.7	-0.0	-14.4	-2472.2
	86	-1705.5	803.6	-0.7	0.0	12.1	-139.4
4	40	1823.4	94.0	-2305.2	12.1	4792.2	193.0
	86	-1574.1	-94.0	867.1	-12.1	362.8	112.6
5	40	1269.6	98.4	15.0	-0.4	23.5	232.0
	86	-1077.8	-98.4	-15.0	0.4	-31.9	86.8
6	40	1347.3	-173.5	2.8	-0.4	8.8	-570.9
	86	-1155.5	173.5	-2.8	0.4	-11.1	-0.3
7	40	1473.7	-509.2	0.9	-0.0	-10.4	-1578.1
	86	-1282.0	509.2	-0.9	0.0	7.4	-76.9
8	40	1520.0	-939.9	-0.2	-0.0	-7.0	-2853.0
	86	-1328.2	939.9	0.2	0.0	7.6	-201.8
9	40	1462.1	-521.9	0.7	-0.0	-10.7	-1613.9
	86	-1270.3	521.9	-0.7	0.0	8.5	-82.1
10	40	1374.5	76.5	-1536.6	8.1	3193.6	162.9
	86	-1182.7	-76.5	577.8	-8.1	242.3	85.9
11	40	1335.0	112.5	2.0	-0.0	-14.2	269.3
	86	-1143.2	-112.5	-2.0	0.0	7.6	96.3
12	40	1364.5	-101.5	1.5	-0.0	-12.7	-364.9
	86	-1172.8	101.5	-1.5	0.0	7.7	34.9
13	40	1279.3	117.7	2.0	-0.0	-11.5	289.1
	86	-1087.5	-117.7	-2.0	0.0	5.0	93.3
14	40	1335.4	101.7	-305.8	1.6	627.4	238.3
	86	-1143.7	-101.7	114.0	-1.6	54.7	92.4
15	40	1531.6	-927.3	0.0	-0.0	-6.6	-2817.1
	86	-1339.9	927.3	-0.0	0.0	6.5	-196.5
16	40	1270.3	96.5	15.8	-0.4	26.3	226.8
	86	-1078.6	-96.5	-15.8	0.4	-36.3	85.9
17	40	1356.4	-198.2	2.8	-0.5	10.5	-643.4
	86	-1164.6	198.2	-2.8	0.5	-13.0	-9.7
1	86	1618.9	-148.4	0.7	0.1	-10.6	8.5
	107	-1618.9	148.4	-0.7	-0.1	9.9	-156.9
2	86	1682.4	-188.0	-0.5	0.1	-10.8	110.2
	107	-1682.4	188.0	0.5	-0.1	11.3	-298.2
3	86	1601.9	-143.5	0.4	0.1	-12.2	14.6
	107	-1601.9	143.5	-0.4	-0.1	11.8	-158.1
4	86	1479.0	-87.3	-811.6	15.1	-317.5	-117.9
	107	-1479.0	87.3	811.6	-15.1	1129.2	30.6
5	86	1007.6	-51.7	10.5	-0.3	31.6	-84.2
	107	-1007.6	51.7	-10.5	0.3	-35.8	33.4

Comb.	Nodo	N [kg]	T1-2 [kg]	T1-3 [kg]	Mt [kgm]	M1-3 [kgm]	M1-2 [kgm]
6	86	1082.8	-71.2	1.8	0.2	10.9	-27.3
	107	-1082.8	71.2	-1.8	-0.2	-3.2	-35.0
7	86	1203.4	-104.5	0.6	0.1	-7.5	-4.6
	107	-1203.4	104.5	-0.6	-0.1	6.9	-99.9
8	86	1245.7	-130.9	-0.2	0.1	-7.7	63.2
	107	-1245.7	130.9	0.2	-0.1	7.9	-194.1
9	86	1192.0	-101.2	0.4	0.1	-8.6	-0.5
	107	-1192.0	101.2	-0.4	-0.1	8.2	-100.7
10	86	1110.1	-63.7	-540.9	10.0	-212.2	-88.9
	107	-1110.1	63.7	540.9	-10.0	753.1	25.1
11	86	1071.9	-54.8	1.4	-0.0	-7.7	-93.6
	107	-1071.9	54.8	-1.4	0.0	6.3	38.8
12	86	1099.4	-68.7	1.1	0.0	-7.9	-60.7
	107	-1099.4	68.7	-1.1	-0.0	6.8	-8.0
13	86	1017.1	-51.2	1.4	-0.0	-5.1	-89.1
	107	-1017.1	51.2	-1.4	0.0	3.6	37.8
14	86	1072.3	-55.3	-107.1	2.0	-48.7	-91.1
	107	-1072.3	55.3	107.1	-2.0	155.8	35.8
15	86	1257.1	-134.2	-0.0	0.1	-6.6	59.1
	107	-1257.1	134.2	0.0	-0.1	6.6	-193.3
16	86	1008.4	-51.8	10.9	-0.3	35.9	-83.4
	107	-1008.4	51.8	-10.9	0.3	-39.8	32.7
17	86	1091.7	-73.1	1.8	0.3	12.7	-19.8
	107	-1091.7	73.1	-1.8	-0.3	-3.9	-42.6
1	107	1479.4	-16.9	0.4	0.1	-10.1	36.1
	129	-1479.4	16.9	-0.4	-0.1	9.7	-53.1
2	107	1538.3	-8.3	-0.5	0.2	-11.4	94.6
	129	-1538.3	8.3	0.5	-0.2	12.0	-102.9
3	107	1462.7	-14.5	0.2	0.1	-12.0	35.6
	129	-1462.7	14.5	-0.2	-0.1	11.8	-50.1
4	107	1346.4	-26.2	-597.9	12.9	-1088.3	-37.2
	129	-1346.4	26.2	597.9	-12.9	1686.1	11.0
5	107	908.3	-21.0	8.4	-0.2	35.5	-31.6
	129	-908.3	21.0	-8.4	0.2	-41.2	10.6
6	107	981.4	-11.0	1.4	0.2	3.1	10.5
	129	-981.4	11.0	-1.4	-0.2	-4.3	-21.8
7	107	1097.3	-13.9	0.4	0.1	-7.1	19.8
	129	-1097.3	13.9	-0.4	-0.1	6.7	-33.7
8	107	1136.6	-8.2	-0.2	0.1	-7.9	58.8
	129	-1136.6	8.2	0.2	-0.1	8.2	-66.9
9	107	1086.2	-12.3	0.3	0.1	-8.3	19.5
	129	-1086.2	12.3	-0.3	-0.1	8.0	-31.7
10	107	1008.7	-20.1	-398.5	8.6	-725.8	-29.1
	129	-1008.7	20.1	398.5	-8.6	1124.3	9.0
11	107	971.5	-19.8	1.0	0.0	-6.4	-37.5
	129	-971.5	19.8	-1.0	-0.0	5.4	17.6

Comb.	Nodo	N [kg]	T1-2 [kg]	T1-3 [kg]	Mt [kgm]	M1-3 [kgm]	M1-2 [kgm]
12	107	997.4	-17.1	0.7	0.0	-6.9	-18.1
	129	-997.4	17.1	-0.7	-0.0	6.2	1.1
13	107	917.5	-21.0	1.0	-0.0	-3.7	-34.9
	129	-917.5	21.0	-1.0	0.0	2.7	13.9
14	107	971.8	-19.5	-78.9	1.7	-150.5	-35.7
	129	-971.8	19.5	78.9	-1.7	229.4	16.3
15	107	1147.7	-9.8	-0.1	0.1	-6.7	59.1
	129	-1147.7	9.8	0.1	-0.1	6.8	-68.9
16	107	909.1	-20.8	8.8	-0.2	39.6	-30.8
	129	-909.1	20.8	-8.8	0.2	-45.1	10.0
17	107	990.3	-9.4	1.3	0.3	3.8	16.7
	129	-990.3	9.4	-1.3	-0.3	-4.9	-26.5
1	129	1340.9	-39.3	0.3	0.2	-9.9	-66.7
	150	-1340.9	39.3	-0.3	-0.2	9.6	27.4
2	129	1396.0	-53.7	-0.4	0.3	-12.1	-98.4
	150	-1396.0	53.7	0.4	-0.3	12.5	44.8
3	129	1324.7	-38.4	0.2	0.2	-12.0	-71.4
	150	-1324.7	38.4	-0.2	-0.2	11.8	33.1
4	129	1214.2	-18.2	-436.2	8.9	-1654.1	-18.2
	150	-1214.2	18.2	436.2	-8.9	2090.3	-0.0
5	129	809.1	-13.0	-5.9	-0.1	40.9	8.1
	150	-809.1	13.0	5.9	0.1	-44.9	-18.1
6	129	880.5	-6.1	-2.6	0.3	4.2	28.8
	150	-880.5	6.1	2.6	-0.3	-4.9	-35.3
7	129	991.9	-28.0	0.3	0.1	-6.8	-45.8
	150	-991.9	28.0	-0.3	-0.1	6.5	17.8
8	129	1028.7	-37.5	-0.2	0.2	-8.3	-66.9
	150	-1028.7	37.5	0.2	-0.2	8.5	29.4
9	129	981.1	-27.3	0.2	0.1	-8.2	-48.9
	150	-981.1	27.3	-0.2	-0.1	8.0	21.6
10	129	907.4	-13.9	-290.7	5.9	-1102.9	-13.5
	150	-907.4	13.9	290.7	-5.9	1393.6	-0.4
11	129	871.3	-12.7	0.8	0.0	-5.6	-17.0
	150	-871.3	12.7	-0.8	-0.0	4.8	4.3
12	129	895.7	-17.5	0.6	0.1	-6.3	-27.6
	150	-895.7	17.5	-0.6	-0.1	5.8	10.0
13	129	818.1	-13.4	0.8	0.0	-2.8	-11.6
	150	-818.1	13.4	-0.8	-0.0	2.1	-1.8
14	129	871.5	-12.8	-57.5	1.2	-225.3	-16.9
	150	-871.5	12.8	57.5	-1.2	282.8	4.1
15	129	1039.5	-38.2	-0.1	0.2	-6.9	-63.8
	150	-1039.5	38.2	0.1	-0.2	7.0	25.6
16	129	809.9	-13.0	-6.3	-0.2	44.9	10.6
	150	-809.9	13.0	6.3	0.2	-48.7	-20.1
17	129	889.2	-5.1	-2.8	0.3	4.8	34.2
	150	-889.2	5.1	2.8	-0.3	-5.5	-39.7

Comb.	Nodo	N [kg]	T1-2 [kg]	T1-3 [kg]	Mt [kgm]	M1-3 [kgm]	M1-2 [kgm]
1	150	1202.3	-97.8	0.5	0.2	-9.8	-148.8
	163	-1202.3	97.8	-0.5	-0.2	9.3	51.0
2	150	1253.5	-112.0	0.1	0.3	-12.7	-248.4
	163	-1253.5	112.0	-0.1	-0.3	12.6	136.4
3	150	1186.5	-96.3	0.5	0.2	-12.0	-156.3
	163	-1186.5	96.3	-0.5	-0.2	11.5	60.0
4	150	1081.9	-71.3	-311.4	3.2	-2070.4	-7.8
	163	-1081.9	71.3	311.4	-3.2	2381.7	-63.5
5	150	709.9	-41.5	-4.0	-0.1	44.7	0.1
	163	-709.9	41.5	4.0	0.1	-47.0	-41.8
6	150	779.5	-52.5	-1.7	0.3	4.8	-51.4
	163	-779.5	52.5	1.7	-0.3	-5.3	-0.3
7	150	886.5	-69.7	0.4	0.1	-6.7	-98.5
	163	-886.5	69.7	-0.4	-0.1	6.3	28.8
8	150	920.6	-79.1	0.1	0.2	-8.6	-164.8
	163	-920.6	79.1	-0.1	-0.2	8.5	85.7
9	150	875.9	-68.7	0.4	0.1	-8.1	-103.5
	163	-875.9	68.7	-0.4	-0.1	7.7	34.8
10	150	806.2	-52.0	-207.5	2.1	-1380.4	-4.4
	163	-806.2	52.0	207.5	-2.1	1587.9	-47.6
11	150	771.0	-48.6	0.7	0.0	-5.0	-4.1
	163	-771.0	48.6	-0.7	-0.0	4.2	-44.5
12	150	794.0	-54.0	0.6	0.1	-5.9	-37.3
	163	-794.0	54.0	-0.6	-0.1	5.3	-16.7
13	150	718.6	-42.6	0.6	0.0	-2.2	3.7
	163	-718.6	42.6	-0.6	-0.0	1.6	-46.3
14	150	771.1	-48.6	-40.9	0.5	-280.3	-5.2
	163	-771.1	48.6	40.9	-0.5	321.2	-43.4
15	150	931.1	-80.1	0.1	0.2	-7.1	-159.8
	163	-931.1	80.1	-0.1	-0.2	7.0	79.7
16	150	710.7	-41.5	-4.4	-0.1	48.5	-0.4
	163	-710.7	41.5	4.4	0.1	-50.5	-41.2
17	150	788.1	-53.6	-1.9	0.3	5.3	-57.1
	163	-788.1	53.6	1.9	-0.3	-5.8	4.4
1	163	1100.6	-268.1	1.1	0.2	-9.6	-175.8
	196	-660.3	268.1	-1.1	-0.2	3.4	-1363.3
2	163	1147.3	-478.5	1.0	0.3	-12.8	-345.6
	196	-707.1	478.5	-1.0	-0.3	6.9	-2400.9
3	163	1085.1	-275.8	1.2	0.3	-11.8	-186.9
	196	-644.9	275.8	-1.2	-0.3	5.1	-1396.4
4	163	987.3	19.8	-428.3	-12.3	-2376.4	55.6
	196	-547.1	-19.8	-2111.7	12.3	-2455.1	58.0
5	163	640.0	21.6	-7.6	0.3	46.9	41.6
	196	-301.3	-21.6	7.6	-0.3	-16.4	82.0
6	163	707.7	-67.4	-0.5	0.3	5.2	-33.6

Comb.	Nodo	N [kg]	T1-2 [kg]	T1-3 [kg]	Mt [kgm]	M1-3 [kgm]	M1-2 [kgm]
	196	-369.0	67.4	0.5	-0.3	-2.4	-355.3
7	163	809.5	-175.5	0.8	0.2	-6.5	-111.7
	196	-470.8	175.5	-0.8	-0.2	2.0	-895.7
8	163	840.6	-315.7	0.7	0.2	-8.6	-224.9
	196	-502.0	315.7	-0.7	-0.2	4.4	-1587.4
9	163	799.2	-180.6	0.8	0.2	-7.9	-119.1
	196	-460.5	180.6	-0.8	-0.2	3.1	-917.8
10	163	734.0	16.4	-285.4	-8.2	-1584.3	42.6
	196	-395.3	-16.4	-1407.9	8.2	-1637.0	51.9
11	163	699.8	25.7	0.8	0.1	-4.4	44.5
	196	-361.1	-25.7	-0.8	-0.1	-0.2	103.2
12	163	721.2	-44.0	0.8	0.1	-5.5	-11.4
	196	-382.5	44.0	-0.8	-0.1	0.9	-240.9
13	163	648.3	28.8	0.6	0.1	-1.7	48.4
	196	-309.7	-28.8	-0.6	-0.1	-1.8	116.9
14	163	699.9	22.5	-56.4	-1.6	-320.7	42.1
	196	-361.2	-22.5	-282.2	1.6	-327.4	87.0
15	163	850.9	-310.6	0.7	0.2	-7.1	-217.5
	196	-512.3	310.6	-0.7	-0.2	3.3	-1565.3
16	163	640.8	20.9	-8.2	0.3	50.5	40.8
	196	-302.2	-20.9	8.2	-0.3	-17.2	79.0
17	163	716.2	-75.6	-0.5	0.4	5.6	-41.0
	196	-377.5	75.6	0.5	-0.4	-2.3	-395.1
1	13	37596.2	-4177.4	-40.4	541.1	424.7	-22736.6
	31	-37382.8	4177.4	40.4	-541.1	-154.3	-5251.8
2	13	32492.5	-6833.1	-55.8	858.0	500.6	-37103.1
	31	-32279.1	6833.1	55.8	-858.0	-126.8	-8678.4
3	13	35694.5	-4189.7	-55.8	551.0	474.8	-22817.7
	31	-35481.1	4189.7	55.8	-551.0	-101.1	-5253.2
4	13	37642.6	-611.8	-2087.9	2963.5	19691.7	-3282.5
	31	-37429.2	611.8	856.7	-2963.5	-9827.3	-816.7
5	13	25405.9	-242.1	1587.0	-730.6	-11746.8	-1194.1
	31	-25241.7	242.1	-1587.0	730.6	1427.3	-429.7
6	13	24912.6	-1458.4	178.1	-1114.2	-1301.1	-7713.3
	31	-24748.5	1458.4	-178.1	1114.2	539.1	-2076.5
7	13	27916.4	-2804.9	-25.6	362.3	282.6	-15240.3
	31	-27752.3	2804.9	25.6	-362.3	-110.9	-3552.5
8	13	24513.9	-4575.4	-35.9	573.5	333.1	-24818.0
	31	-24349.8	4575.4	35.9	-573.5	-92.6	-5836.9
9	13	26648.6	-2813.1	-35.9	368.9	315.9	-15294.4
	31	-26484.5	2813.1	35.9	-368.9	-75.5	-3553.5
10	13	27947.4	-427.9	-1390.6	1977.3	13127.2	-2270.9
	31	-27783.2	427.9	569.9	-1977.3	-6559.6	-595.8
11	13	28436.3	-159.7	-18.0	45.0	194.4	-876.3
	31	-28272.1	159.7	18.0	-45.0	-73.8	-193.7
12	13	27103.5	-1044.7	-23.4	151.4	224.8	-5670.8

Comb.	Nodo	N [kg]	T1-2 [kg]	T1-3 [kg]	Mt [kgm]	M1-3 [kgm]	M1-2 [kgm]
	31	-26939.3	1044.7	23.4	-151.4	-67.8	-1328.5
13	13	26190.7	-149.5	1.6	25.5	82.1	-723.3
	31	-26026.5	149.5	-1.6	-25.5	-92.8	-278.4
14	13	27790.2	-215.2	-294.4	432.2	2783.6	-1161.4
	31	-27626.0	215.2	130.2	-432.2	-1361.2	-280.3
15	13	25781.7	-4567.1	-25.6	567.0	299.7	-24763.9
	31	-25617.6	4567.1	25.6	-567.0	-128.0	-5836.0
16	13	25370.2	-252.6	1719.5	-791.3	-12709.8	-1247.9
	31	-25206.1	252.6	-1719.5	791.3	1572.3	-446.7
17	13	24835.6	-1578.2	193.5	-1207.1	-1414.4	-8344.3
	31	-24671.4	1578.2	-193.5	1207.1	597.2	-2251.6
1	31	35216.4	-4164.9	-528.0	860.8	154.3	4229.7
	41	-35144.7	4164.9	528.0	-860.8	1033.8	-13600.7
2	31	30112.6	-6812.7	-623.2	1260.8	126.8	7656.4
	41	-30041.0	6812.7	623.2	-1260.8	1275.4	-22985.1
3	31	33314.6	-4177.6	-537.4	865.8	101.1	4231.1
	41	-33243.0	4177.6	537.4	-865.8	1108.1	-13630.7
4	31	35262.8	-588.8	-832.1	3134.5	9827.3	-205.6
	41	-35191.1	588.8	418.7	-3134.5	-8420.1	-1119.1
5	31	23576.9	-237.5	1098.4	115.1	-1427.3	-356.5
	41	-23521.7	237.5	-1098.4	-115.1	-1609.1	-176.9
6	31	23085.5	-1419.2	-41.1	1108.4	-539.1	1291.5
	41	-23030.4	1419.2	41.1	-1108.4	140.6	-4473.1
7	31	26085.8	-2796.5	-375.8	588.7	110.9	2766.3
	41	-26030.6	2796.5	375.8	-588.7	734.6	-9058.4
8	31	22683.3	-4561.7	-439.2	855.4	92.6	5050.8
	41	-22628.2	4561.7	439.2	-855.4	895.7	-15314.7
9	31	24818.0	-2805.0	-382.1	592.0	75.5	2767.2
	41	-24762.8	2805.0	382.1	-592.0	784.2	-9078.4
10	31	26116.7	-412.4	-578.5	2104.5	6559.6	-190.6
	41	-26061.6	412.4	302.9	-2104.5	-5568.0	-737.3
11	31	26605.6	-159.5	-262.1	173.0	73.8	-592.7
	41	-26550.5	159.5	262.1	-173.0	516.1	233.8
12	31	25272.8	-1041.9	-296.6	308.4	67.8	542.1
	41	-25217.7	1041.9	296.6	-308.4	599.6	-2886.3
13	31	24360.0	-149.0	-220.2	143.0	92.8	-508.0
	41	-24304.9	149.0	220.2	-143.0	402.7	172.8
14	31	25959.5	-212.0	-324.5	558.2	1361.2	-506.1
	41	-25904.4	212.0	269.4	-558.2	-693.2	29.1
15	31	23951.1	-4553.3	-433.0	852.0	128.0	5049.8
	41	-23896.0	4553.3	433.0	-852.0	846.1	-15294.7
16	31	23541.4	-247.3	1213.1	114.1	-1572.3	-339.4
	41	-23486.3	247.3	-1213.1	-114.1	-1869.6	-215.7
17	31	23008.9	-1534.1	-24.8	1188.5	-597.2	1467.0
	41	-22953.7	1534.1	24.8	-1188.5	93.6	-4905.1

Comb.	Nodo	N [kg]	T1-2 [kg]	T1-3 [kg]	Mt [kgm]	M1-3 [kgm]	M1-2 [kgm]
1	41	4466.4	-2904.6	31.6	-40.6	-1117.3	-14298.6
	87	-4238.2	2904.6	-31.6	40.6	1014.6	4858.6
2	41	4234.9	-4902.2	57.1	-93.4	-1436.9	-23815.2
	87	-4006.7	4902.2	-57.1	93.4	1251.2	7883.1
3	41	5576.6	-2920.7	26.5	-43.6	-1207.6	-14444.4
	87	-5348.4	2920.7	-26.5	43.6	1121.5	4952.1
4	41	3588.8	-134.1	-5123.4	3455.9	9727.3	-1075.4
	87	-3360.6	134.1	3807.1	-3455.9	4784.7	639.6
5	41	1270.5	-62.9	-93.5	-905.3	1546.4	-548.0
	87	-1095.0	62.9	93.5	905.3	-1295.0	351.4
6	41	1467.2	-878.4	-1.9	-1252.0	-133.7	-4494.7
	87	-1291.7	878.4	1.9	1252.0	136.2	1705.7
7	41	3063.9	-1937.7	22.8	-21.9	-784.4	-9566.8
	87	-2888.4	1937.7	-22.8	21.9	710.2	3269.5
8	41	2909.5	-3269.3	39.8	-57.1	-997.4	-15911.2
	87	-2734.0	3269.3	-39.8	57.1	868.0	5285.8
9	41	3804.0	-1948.4	19.4	-23.9	-844.5	-9664.0
	87	-3628.5	1948.4	-19.4	23.9	781.5	3331.8
10	41	2478.8	-90.6	-3413.9	2309.1	6445.4	-751.4
	87	-2303.3	90.6	2536.4	-2309.1	3223.7	456.8
11	41	3544.9	28.6	-2.9	30.5	-497.1	-225.9
	87	-3369.4	-28.6	2.9	-30.5	506.7	318.9
12	41	3522.2	-635.0	5.2	12.7	-606.7	-3389.4
	87	-3346.7	635.0	-5.2	-12.7	589.8	1325.8
13	41	1728.2	19.3	6.6	35.7	-364.8	-171.5
	87	-1552.7	-19.3	-6.6	-35.7	343.4	234.3
14	41	3436.1	0.8	-685.5	486.0	881.9	-357.4
	87	-3260.6	-0.8	510.0	-486.0	1060.9	360.0
15	41	2169.4	-3258.6	43.2	-55.1	-937.2	-15814.0
	87	-1993.9	3258.6	-43.2	55.1	796.7	5223.5
16	41	1267.8	-69.0	-112.6	-984.0	1796.6	-577.0
	87	-1092.3	69.0	112.6	984.0	-1487.7	363.0
17	41	1481.2	-953.3	-5.7	-1358.7	-90.5	-4859.4
	87	-1305.7	953.3	5.7	1358.7	105.1	1842.4
1	87	4190.6	-2619.0	34.4	-31.9	-1014.8	-4985.0
	108	-4190.6	2619.0	-34.4	31.9	980.4	2366.0
2	87	3969.3	-4393.6	60.7	-78.8	-1251.6	-8090.2
	108	-3969.3	4393.6	-60.7	78.8	1190.9	3696.5
3	87	5300.0	-2617.2	29.0	-34.8	-1121.8	-5079.5
	108	-5300.0	2617.2	-29.0	34.8	1092.8	2462.3
4	87	3298.7	-169.4	-3307.0	3285.5	-4834.3	-655.7
	108	-3298.7	169.4	3307.0	-3285.5	8141.4	486.3
5	87	1045.9	-73.8	-97.3	-905.5	1295.6	-360.1
	108	-1045.9	73.8	97.3	905.5	-1215.9	297.1
6	87	1247.0	-808.3	-1.7	-1250.4	-136.2	-1746.2
	108	-1247.0	808.3	1.7	1250.4	136.4	1048.7

Comb.	Nodo	N [kg]	T1-2 [kg]	T1-3 [kg]	Mt [kgm]	M1-3 [kgm]	M1-2 [kgm]
7	87	2849.9	-1749.0	24.8	-16.0	-710.4	-3354.6
	108	-2849.9	1749.0	-24.8	16.0	685.6	1605.6
8	87	2702.3	-2932.1	42.3	-47.3	-868.2	-5424.7
	108	-2702.3	2932.1	-42.3	47.3	825.9	2492.6
9	87	3589.5	-1747.8	21.2	-17.9	-781.7	-3417.7
	108	-3589.5	1747.8	-21.2	17.9	760.5	1669.8
10	87	2255.2	-116.0	-2202.8	2195.6	-3256.7	-468.5
	108	-2255.2	116.0	2202.8	-2195.6	5459.5	352.5
11	87	3319.4	14.7	-2.0	30.6	-506.7	-324.9
	108	-3319.4	-14.7	2.0	-30.6	508.7	339.6
12	87	3300.3	-575.5	6.4	14.8	-589.8	-1358.6
	108	-3300.3	575.5	-6.4	-14.8	583.5	783.1
13	87	1502.9	-2.8	7.6	35.9	-343.3	-240.1
	108	-1502.9	2.8	-7.6	-35.9	335.7	237.3
14	87	3210.9	-12.3	-442.6	463.4	-1067.5	-367.3
	108	-3210.9	12.3	442.6	-463.4	1510.2	355.0
15	87	1962.7	-2933.3	45.9	-45.3	-796.9	-5361.7
	108	-1962.7	2933.3	-45.9	45.3	751.0	2428.4
16	87	1043.3	-79.1	-117.0	-984.3	1488.2	-371.8
	108	-1043.3	79.1	117.0	984.3	-1391.0	307.1
17	87	1261.4	-875.5	-5.7	-1357.1	-105.0	-1885.5
	108	-1261.4	875.5	5.7	1357.1	108.9	1143.8
1	108	4106.7	-1511.5	36.6	-23.5	-980.7	-2497.8
	130	-4106.7	1511.5	-36.6	23.5	944.2	986.3
2	108	3895.4	-2507.8	63.6	-65.2	-1191.4	-3910.1
	130	-3895.4	2507.8	-63.6	65.2	1127.8	1402.4
3	108	5215.4	-1496.5	31.0	-26.3	-1093.1	-2595.3
	130	-5215.4	1496.5	-31.0	26.3	1062.1	1098.8
4	108	3200.7	-121.5	-2499.6	3027.9	-8186.1	-506.1
	130	-3200.7	121.5	2499.6	-3027.9	10685.7	384.6
5	108	969.2	-66.3	-100.4	-904.6	1216.4	-308.1
	130	-969.2	66.3	100.4	904.6	-1133.4	-115.0
6	108	1174.5	-486.1	-1.5	-1247.4	-136.4	-1086.9
	130	-1174.5	486.1	1.5	1247.4	136.1	-461.9
7	108	2783.5	-1011.9	26.3	-10.4	-685.8	-1694.7
	130	-2783.5	1011.9	-26.3	10.4	659.4	682.8
8	108	2642.6	-1676.1	44.4	-38.1	-826.2	-2636.3
	130	-2642.6	1676.1	-44.4	38.1	781.9	960.2
9	108	3522.6	-1001.9	22.6	-12.3	-760.7	-1759.8
	130	-3522.6	1001.9	-22.6	12.3	738.1	757.9
10	108	2179.5	-85.2	-1664.4	2023.9	-5489.4	-366.9
	130	-2179.5	85.2	1664.4	-2023.9	7153.8	281.7
11	108	3242.0	-7.2	-1.4	31.1	-508.8	-348.5
	130	-3242.0	7.2	1.4	-31.1	510.2	341.3
12	108	3226.2	-339.1	7.3	17.0	-583.6	-819.1
	130	-3226.2	339.1	-7.3	-17.0	576.3	480.0

Comb.	Nodo	N [kg]	T1-2 [kg]	T1-3 [kg]	Mt [kgm]	M1-3 [kgm]	M1-2 [kgm]
13	108	1425.4	-25.2	8.4	36.3	-335.7	-245.8
	130	-1425.4	25.2	-8.4	-36.3	327.3	220.6
14	108	3133.6	-20.9	-334.5	429.4	-1516.2	-365.3
	130	-3133.6	20.9	334.5	-429.4	1850.7	344.3
15	108	1903.5	-1686.1	48.1	-36.3	-751.3	-2571.3
	130	-1903.5	1686.1	-48.1	36.3	703.2	885.2
16	108	966.7	-69.1	-120.4	-983.4	1391.4	-318.2
	130	-966.7	69.1	120.4	983.4	-1290.9	-157.0
17	108	1189.4	-524.7	-5.5	-1354.0	-108.9	-1183.7
	130	-1189.4	524.7	5.5	1354.0	112.2	-554.9
1	130	4022.7	-1047.8	38.4	-15.4	-944.6	-1119.7
	151	-4022.7	1047.8	-38.4	15.4	906.2	71.9
2	130	3821.5	-1703.1	66.0	-52.5	-1128.4	-1618.2
	151	-3821.5	1703.1	-66.0	52.5	1062.4	-84.9
3	130	5130.8	-1038.2	32.7	-18.0	-1062.6	-1233.7
	151	-5130.8	1038.2	-32.7	18.0	1029.9	195.4
4	130	3102.4	-123.8	-1600.5	2717.2	-10721.7	-404.9
	151	-3102.4	123.8	1600.5	-2717.2	12322.2	281.2
5	130	892.3	-75.1	-104.1	-902.6	1133.7	115.4
	151	-892.3	75.1	104.1	902.6	-1046.6	98.5
6	130	1102.0	-366.8	-1.5	-1243.0	-136.1	472.9
	151	-1102.0	366.8	1.5	1243.0	135.5	-342.3
7	130	2717.0	-704.8	27.6	-4.9	-659.7	-773.1
	151	-2717.0	704.8	-27.6	4.9	632.1	68.3
8	130	2582.9	-1141.7	46.0	-29.6	-782.3	-1105.4
	151	-2582.9	1141.7	-46.0	29.6	736.2	-36.2
9	130	3455.7	-698.4	23.9	-6.6	-738.4	-849.0
	151	-3455.7	698.4	-23.9	6.6	714.6	150.6
10	130	2103.5	-88.7	-1065.0	1816.8	-7177.8	-296.6
	151	-2103.5	88.7	1065.0	-1816.8	8242.8	207.8
11	130	3164.4	-40.8	-0.8	32.2	-510.4	-350.8
	151	-3164.4	40.8	0.8	-32.2	511.2	310.0
12	130	3152.1	-259.5	8.1	19.6	-576.5	-516.9
	151	-3152.1	259.5	-8.1	-19.6	568.5	257.4
13	130	1347.7	-48.0	9.0	37.1	-327.4	-229.5
	151	-1347.7	48.0	-9.0	-37.1	318.4	181.5
14	130	3056.2	-48.9	-214.1	388.9	-1855.7	-355.1
	151	-3056.2	48.9	214.1	-388.9	2069.8	306.3
15	130	1844.2	-1148.1	49.8	-27.9	-703.6	-1029.5
	151	-1844.2	1148.1	-49.8	27.9	653.8	-118.6
16	130	889.8	-76.9	-124.4	-981.4	1291.2	157.9
	151	-889.8	76.9	124.4	981.4	-1186.8	87.6
17	130	1117.2	-394.6	-5.5	-1349.3	-112.2	566.7
	151	-1117.2	394.6	5.5	1349.3	115.1	-417.5
1	151	3938.8	-1509.3	40.0	-7.3	-906.8	-206.6

Comb.	Nodo	N [kg]	T1-2 [kg]	T1-3 [kg]	Mt [kgm]	M1-3 [kgm]	M1-2 [kgm]
	164	-3938.8	1509.3	-40.0	7.3	866.8	-1302.7
2	151	3747.8	-2426.5	67.9	-40.6	-1063.0	-132.8
	164	-3747.8	2426.5	-67.9	40.6	995.1	-2293.7
3	151	5046.2	-1533.1	34.4	-9.5	-1030.5	-331.7
	164	-5046.2	1533.1	-34.4	9.5	996.1	-1201.4
4	151	3004.1	-231.5	-627.3	2380.1	-12346.0	-302.1
	164	-3004.1	231.5	627.3	-2380.1	12973.3	70.5
5	151	815.3	-121.1	-108.4	-899.6	1046.7	-106.0
	164	-815.3	121.1	108.4	899.6	-955.3	32.4
6	151	1029.4	-537.7	-1.6	-1237.2	-135.7	334.1
	164	-1029.4	537.7	1.6	1237.2	134.8	-515.1
7	151	2650.6	-1017.0	28.7	0.7	-632.5	-159.4
	164	-2650.6	1017.0	-28.7	-0.7	603.8	-857.6
8	151	2523.3	-1628.4	47.4	-21.5	-736.7	-110.2
	164	-2523.3	1628.4	-47.4	21.5	689.3	-1518.2
9	151	3388.9	-1032.8	25.0	-0.8	-715.0	-242.8
	164	-3388.9	1032.8	-25.0	0.8	690.0	-790.0
10	151	2027.5	-165.1	-416.2	1592.2	-8258.7	-223.1
	164	-2027.5	165.1	416.2	-1592.2	8674.8	58.0
11	151	3086.8	-114.8	-0.1	34.0	-511.4	-320.0
	164	-3086.8	114.8	0.1	-34.0	511.6	205.2
12	151	3077.9	-420.6	8.9	22.7	-568.8	-295.0
	164	-3077.9	420.6	-8.9	-22.7	559.9	-125.6
13	151	1269.9	-88.3	9.5	38.4	-318.6	-190.7
	164	-1269.9	88.3	-9.5	-38.4	309.0	102.4
14	151	2978.8	-127.9	-83.8	345.5	-2073.2	-317.6
	164	-2978.8	127.9	83.8	-345.5	2157.0	189.6
15	151	1785.0	-1612.5	51.1	-20.1	-654.2	-26.8
	164	-1785.0	1612.5	-51.1	20.1	603.1	-1585.8
16	151	812.9	-124.2	-128.8	-978.2	1186.8	-95.0
	164	-812.9	124.2	128.8	978.2	-1078.4	24.6
17	151	1045.0	-577.8	-5.6	-1343.1	-115.2	409.7
	164	-1045.0	577.8	5.6	1343.1	117.6	-582.5
1	164	3890.4	-2456.1	41.5	1.0	-867.4	1170.1
	197	-3487.5	2456.1	-41.5	-1.0	629.0	-15268.2
2	164	3710.0	-3873.3	69.5	-29.4	-995.8	2077.6
	197	-3307.0	3873.3	-69.5	29.4	596.8	-24310.1
3	164	4997.4	-2544.3	36.1	-0.6	-996.8	1067.0
	197	-4594.4	2544.3	-36.1	0.6	789.4	-15671.3
4	164	2941.1	-479.5	194.9	2061.5	-12981.4	-88.6
	197	-2538.1	479.5	-2519.6	-2061.5	5191.0	-2663.9
5	164	765.5	-219.5	-116.5	-895.5	955.1	-40.7
	197	-455.5	219.5	116.5	895.5	-463.6	-1183.6
6	164	984.1	-856.4	-2.1	-1230.3	-134.9	482.2
	197	-674.1	856.4	2.1	1230.3	115.5	-5152.9
7	164	2611.5	-1656.7	29.8	6.3	-604.2	768.1

Comb.	Nodo	N [kg]	T1-2 [kg]	T1-3 [kg]	Mt [kgm]	M1-3 [kgm]	M1-2 [kgm]
	197	-2301.6	1656.7	-29.8	-6.3	433.1	-10277.3
8	164	2491.2	-2601.4	48.5	-13.9	-689.8	1373.1
	197	-2181.3	2601.4	-48.5	13.9	411.6	-16305.2
9	164	3349.5	-1715.5	26.2	5.3	-690.5	699.3
	197	-3039.5	1715.5	-26.2	-5.3	540.0	-10546.0
10	164	1978.6	-338.9	132.0	1380.0	-8680.2	-71.1
	197	-1668.7	338.9	-1681.8	-1380.0	3474.4	-1874.4
11	164	3036.3	-289.0	0.9	36.9	-511.9	-213.1
	197	-2726.4	289.0	-0.9	-36.9	506.5	-1445.5
12	164	3031.0	-762.4	10.0	26.6	-560.3	89.9
	197	-2721.1	762.4	-10.0	-26.6	503.0	-4466.0
13	164	1219.3	-182.8	10.2	40.2	-309.2	-109.5
	197	-909.4	182.8	-10.2	-40.2	250.7	-940.0
14	164	2928.5	-309.9	26.7	305.4	-2158.3	-198.9
	197	-2618.5	309.9	-336.6	-305.4	1115.6	-1579.8
15	164	1753.3	-2542.6	52.1	-12.8	-603.5	1441.8
	197	-1443.3	2542.6	-52.1	12.8	304.7	-16036.5
16	164	763.1	-224.7	-136.8	-973.8	1078.2	-32.8
	197	-453.2	224.7	136.8	973.8	-517.3	-1212.3
17	164	1000.2	-917.5	-6.0	-1335.7	-117.8	548.6
	197	-690.3	917.5	6.0	1335.7	109.2	-5519.2
1	197	4879.9	-8466.4	55.9	46.9	-621.7	12525.1
	203	-4879.9	8466.4	-55.9	-46.9	603.1	-15341.4
2	197	4922.8	-13478.1	84.6	24.1	-600.3	19479.1
	203	-4922.8	13478.1	-84.6	-24.1	572.2	-23962.5
3	197	5963.1	-8652.8	52.9	52.0	-775.6	12890.5
	203	-5963.1	8652.8	-52.9	-52.0	758.0	-15768.8
4	197	3525.8	-1548.5	4689.9	-1047.4	-1958.9	2739.6
	203	-3525.8	1548.5	-4689.9	1047.4	398.8	-3254.7
5	197	1039.6	-903.4	-112.6	-765.9	414.8	1214.7
	203	-1039.6	903.4	112.6	765.9	-391.8	-1517.3
6	197	1386.6	-2973.9	4.7	-1053.4	-113.1	4340.8
	203	-1386.6	2973.9	-4.7	1053.4	108.9	-5326.9
7	197	3291.4	-5735.5	39.7	37.6	-427.9	8453.8
	203	-3291.4	5735.5	-39.7	-37.6	414.7	-10361.7
8	197	3320.0	-9076.6	58.8	22.4	-413.6	13089.8
	203	-3320.0	9076.6	-58.8	-22.4	394.1	-16109.1
9	197	4013.5	-5859.8	37.7	40.9	-530.5	8697.4
	203	-4013.5	5859.8	-37.7	-40.9	518.0	-10646.7
10	197	2388.6	-1123.6	3129.0	-692.0	-1319.3	1930.1
	203	-2388.6	1123.6	-3129.0	692.0	278.5	-2303.9
11	197	3394.5	-869.9	10.3	61.2	-488.6	1620.5
	203	-3394.5	869.9	-10.3	-61.2	485.2	-1909.9
12	197	3472.8	-2538.1	19.7	53.9	-488.5	3952.2
	203	-3472.8	2538.1	-19.7	-53.9	482.0	-4796.4
13	197	1496.5	-699.3	15.1	52.5	-242.9	1072.3

Comb.	Nodo	N [kg]	T1-2 [kg]	T1-3 [kg]	Mt [kgm]	M1-3 [kgm]	M1-2 [kgm]
	203	-1496.5	699.3	-15.1	-52.5	237.9	-1304.9
14	197	3286.6	-947.5	633.7	-89.0	-669.7	1720.2
	203	-3286.6	947.5	-633.7	89.0	458.9	-2035.4
15	197	2597.8	-8952.4	60.8	19.0	-311.0	12846.2
	203	-2597.8	8952.4	-60.8	-19.0	290.8	-15824.2
16	197	1038.3	-923.8	-129.6	-834.1	464.0	1236.1
	203	-1038.3	923.8	129.6	834.1	-440.1	-1545.5
17	197	1414.2	-3173.1	1.9	-1144.9	-107.0	4627.9
	203	-1414.2	3173.1	-1.9	1144.9	102.6	-5679.7
1	14	109852.1	-4493.6	-157.1	124.9	701.9	-24963.6
	32	-92432.1	4493.6	157.1	-124.9	350.6	-5143.8
2	14	97403.6	-6838.0	-190.7	434.6	809.0	-39136.0
	32	-79983.6	6838.0	190.7	-434.6	468.3	-6678.3
3	14	104268.6	-4387.4	-173.2	109.6	759.8	-24699.7
	32	-86848.6	4387.4	173.2	-109.6	400.9	-4695.9
4	14	113291.4	-883.1	-3209.8	-299.0	23469.4	-3547.7
	32	-95871.5	883.1	3209.8	299.0	-1964.0	-2368.8
5	14	78639.8	-810.9	1475.1	-722.4	-11559.1	-3233.0
	32	-65239.8	810.9	-1475.1	722.4	2074.2	-2746.9
6	14	77774.4	-2027.5	142.7	-1134.4	-1234.1	-10241.1
	32	-64374.4	2027.5	-142.7	1134.4	1023.7	-3707.9
7	14	82837.4	-3070.3	-108.7	62.6	480.1	-16903.3
	32	-69437.4	3070.3	108.7	-62.6	248.2	-3667.6
8	14	74538.4	-4633.2	-131.1	269.0	551.5	-26351.6
	32	-61138.4	4633.2	131.1	-269.0	326.7	-4690.7
9	14	79115.1	-2999.5	-119.5	52.4	518.7	-16727.4
	32	-65715.1	2999.5	119.5	-52.4	281.7	-3369.1
10	14	85130.3	-663.2	-2143.8	-220.0	15658.4	-2626.1
	32	-71730.3	663.2	2143.8	220.0	-1294.9	-1817.7
11	14	84623.7	-594.0	-77.0	-236.2	349.0	-2310.7
	32	-71223.7	594.0	77.0	236.2	166.9	-1669.2
12	14	81245.3	-1382.2	-89.2	-135.3	391.6	-7062.0
	32	-67845.3	1382.2	89.2	135.3	205.8	-2199.0
13	14	81634.6	-628.5	-48.3	-192.7	206.6	-2277.4
	32	-68234.6	628.5	48.3	192.7	117.0	-1933.7
14	14	83363.6	-588.3	-491.7	-233.1	3413.0	-2316.9
	32	-69963.6	588.3	491.7	233.1	-118.5	-1624.4
15	14	78260.7	-4704.0	-120.3	279.2	512.9	-26527.5
	32	-64860.7	4704.0	120.3	-279.2	293.1	-4989.2
16	14	78431.6	-832.3	1601.9	-766.0	-12515.3	-3337.6
	32	-65031.6	832.3	-1601.9	766.0	2242.2	-2845.5
17	14	77499.1	-2167.1	159.1	-1212.3	-1351.4	-10982.3
	32	-64099.1	2167.1	-159.1	1212.3	1099.2	-3962.2
1	32	89256.4	-4486.7	-297.5	352.7	-350.6	3617.1
	45	-83406.4	4486.7	297.5	-352.7	1019.9	-13712.1

Comb.	Nodo	N [kg]	T1-2 [kg]	T1-3 [kg]	Mt [kgm]	M1-3 [kgm]	M1-2 [kgm]
2	32	76807.9	-6829.9	-324.4	752.1	-468.3	5151.7
	45	-70957.9	6829.9	324.4	-752.1	1198.2	-20519.0
3	32	83672.9	-4380.4	-368.3	359.4	-400.9	3169.2
	45	-77822.9	4380.4	368.3	-359.4	1229.6	-13025.1
4	32	92695.7	-906.9	-4510.9	402.2	1964.0	842.0
	45	-86845.7	906.9	4510.9	-402.2	8185.6	-2882.6
5	32	62806.1	-773.0	1052.2	306.0	-2074.2	1573.7
	45	-58306.1	773.0	-1052.2	-306.0	-1090.4	-4324.2
6	32	61948.5	-1823.7	22.9	765.7	-1023.7	2536.2
	45	-57448.5	1823.7	-22.9	-765.7	173.5	-6759.7
7	32	66994.5	-3065.3	-206.2	217.9	-248.2	2493.3
	45	-62494.5	3065.3	206.2	-217.9	712.2	-9390.3
8	32	58695.5	-4627.5	-224.2	484.1	-326.7	3516.3
	45	-54195.5	4627.5	224.2	-484.1	831.0	-13928.2
9	32	63272.2	-2994.5	-253.4	222.3	-281.7	2194.7
	45	-58772.2	2994.5	253.4	-222.3	852.0	-8932.2
10	32	69287.4	-678.8	-3015.2	250.9	1294.9	643.2
	45	-64787.4	678.8	3015.2	-250.9	5489.3	-2170.6
11	32	68780.8	-590.4	-207.8	-162.5	-166.9	494.7
	45	-64280.8	590.4	207.8	162.5	634.5	-1823.2
12	32	65402.4	-1378.3	-218.9	-31.0	-205.8	1024.6
	45	-60902.4	1378.3	218.9	31.0	698.3	-4125.8
13	32	65791.8	-625.5	-108.1	-151.0	-117.0	759.3
	45	-61291.8	625.5	108.1	151.0	360.3	-2166.7
14	32	67520.8	-588.5	-777.1	-77.7	118.5	450.0
	45	-63020.8	588.5	777.1	77.7	1630.0	-1774.2
15	32	62417.8	-4698.4	-176.9	479.7	-293.1	3814.9
	45	-57917.8	4698.4	176.9	-479.7	691.2	-14386.2
16	32	62597.9	-787.2	1148.0	343.7	-2242.2	1672.5
	45	-58097.9	787.2	-1148.0	-343.7	-1283.1	-4529.1
17	32	61672.9	-1929.6	32.4	841.2	-1099.2	2791.0
	45	-57172.9	1929.6	-32.4	-841.2	142.3	-7241.9
1	45	43980.1	-30719.0	636.1	-514.2	-894.8	-40086.7
	59	-35920.1	30719.0	-636.1	514.2	-1077.2	-55142.3
2	45	38045.2	-40010.9	630.8	-832.8	-1045.7	-52206.5
	59	-29985.2	40010.9	-630.8	832.8	-909.8	-71827.3
3	45	41346.9	-29266.6	700.8	-461.9	-1111.3	-38266.2
	59	-33286.9	29266.6	-700.8	461.9	-1061.2	-52460.1
4	45	46934.5	-14079.0	-765.7	466.5	-7454.0	-18428.7
	59	-38874.5	14079.0	765.7	-466.5	9827.6	-25216.2
5	45	30202.0	-10742.8	2766.8	-124.0	1008.0	-14027.0
	59	-24002.0	10742.8	-2766.8	124.0	-7958.3	-19279.5
6	45	30392.8	-15639.9	1470.7	-1149.4	-114.0	-20535.8
	59	-24192.8	15639.9	-1470.7	1149.4	-1578.0	-27962.0
7	45	33034.7	-21605.3	463.1	-351.8	-622.2	-28193.4
	59	-26834.7	21605.3	-463.1	351.8	-813.5	-38783.2

Comb.	Nodo	N [kg]	T1-2 [kg]	T1-3 [kg]	Mt [kgm]	M1-3 [kgm]	M1-2 [kgm]
8	45	29078.0	-27799.9	459.6	-564.3	-722.9	-36273.3
	59	-22878.0	27799.9	-459.6	564.3	-702.0	-49906.5
9	45	31279.2	-20637.0	506.3	-317.0	-766.6	-26979.7
	59	-25079.2	20637.0	-506.3	317.0	-802.8	-36995.1
10	45	35004.3	-10512.0	-471.4	302.0	-4995.1	-13754.7
	59	-28804.3	10512.0	471.4	-302.0	6456.4	-18832.4
11	45	33905.8	-10101.4	477.5	1.7	-581.2	-13247.6
	59	-27705.8	10101.4	-477.5	-1.7	-899.2	-18066.8
12	45	32295.1	-13336.9	479.6	-104.5	-635.4	-17466.7
	59	-26095.1	13336.9	-479.6	104.5	-851.3	-23877.7
13	45	32450.6	-10047.6	364.7	-54.0	-305.9	-13111.3
	59	-26250.6	10047.6	-364.7	54.0	-824.7	-18036.3
14	45	33480.3	-9879.3	293.4	68.7	-1489.8	-12963.0
	59	-27280.3	9879.3	-293.4	-68.7	580.4	-17662.9
15	45	30833.5	-28768.2	416.5	-599.1	-578.5	-37486.9
	59	-24633.5	28768.2	-416.5	599.1	-712.6	-51694.6
16	45	30036.5	-10796.4	2963.8	-128.8	1197.2	-14102.0
	59	-23836.5	10796.4	-2963.8	128.8	-8528.7	-19371.9
17	45	30241.2	-16093.1	1562.1	-1237.2	-79.0	-21149.8
	59	-24041.2	16093.1	-1562.1	1237.2	-1639.0	-28757.6
1	15	76372.9	-4714.5	-204.0	169.9	720.0	-28294.3
	33	-58952.9	4714.5	204.0	-169.9	646.6	-3292.7
2	15	70081.0	-7026.1	-267.2	173.0	943.9	-43354.3
	33	-52661.0	7026.1	267.2	-173.0	846.6	-3720.8
3	15	73006.5	-4623.5	-227.9	196.2	780.6	-27978.6
	33	-55586.5	4623.5	227.9	-196.2	746.7	-2998.9
4	15	74891.8	-705.2	-3383.7	477.4	23535.2	-2675.4
	33	-57471.8	705.2	3383.7	-477.4	-864.2	-2049.5
5	15	56913.5	-1907.6	1430.4	-12.8	-11616.9	-10642.3
	33	-43513.5	1907.6	-1430.4	12.8	2543.1	-2175.2
6	15	54834.1	-2966.1	126.8	-870.0	-1266.1	-17303.0
	33	-41434.1	2966.1	-126.8	870.0	1250.0	-2673.5
7	15	57779.4	-3227.9	-139.4	118.5	482.4	-19244.6
	33	-44379.4	3227.9	139.4	-118.5	451.8	-2382.0
8	15	53584.7	-4769.0	-181.6	120.6	631.7	-29284.6
	33	-40184.7	4769.0	181.6	-120.6	585.2	-2667.4
9	15	55535.1	-3167.2	-155.4	136.1	522.9	-19034.2
	33	-42135.1	3167.2	155.4	-136.1	518.5	-2186.1
10	15	56792.0	-555.0	-2259.3	323.6	15692.6	-2165.3
	33	-43392.0	555.0	2259.3	-323.6	-555.4	-1553.2
11	15	58012.3	-768.0	-83.4	118.0	247.6	-3580.3
	33	-44612.3	768.0	83.4	-118.0	310.9	-1565.5
12	15	56338.9	-1548.3	-105.4	120.7	327.9	-8644.0
	33	-42938.9	1548.3	105.4	-120.7	378.4	-1729.6
13	15	56686.5	-752.3	-46.4	70.6	116.7	-3409.3
	33	-43286.5	752.3	46.4	-70.6	194.5	-1630.9

Comb.	Nodo	N [kg]	T1-2 [kg]	T1-3 [kg]	Mt [kgm]	M1-3 [kgm]	M1-2 [kgm]
14	15	56980.3	-705.5	-521.0	161.3	3340.1	-3220.2
	33	-43580.3	705.5	521.0	-161.3	150.3	-1506.8
15	15	55829.0	-4829.6	-165.6	103.0	591.3	-29495.1
	33	-42429.0	4829.6	165.6	-103.0	518.5	-2863.3
16	15	56941.1	-2000.6	1554.3	-15.4	-12570.6	-11228.1
	33	-43541.1	2000.6	-1554.3	15.4	2747.6	-2206.1
17	15	54698.1	-3145.2	142.0	-944.6	-1379.1	-18433.8
	33	-41298.1	3145.2	-142.0	944.6	1339.5	-2721.4
1	33	57699.9	-4733.9	424.1	-45.6	-646.6	2726.7
	63	-43789.9	4733.9	-424.1	45.6	-1622.2	-28053.3
2	33	51408.0	-7054.5	433.9	-40.2	-846.6	3154.7
	63	-37498.0	7054.5	-433.9	40.2	-1474.8	-40896.3
3	33	54333.5	-4642.6	448.8	-44.5	-746.7	2432.9
	63	-40423.5	4642.6	-448.8	44.5	-1654.5	-27270.9
4	33	56218.8	-704.4	-2107.1	-149.0	864.2	1484.0
	63	-42308.8	704.4	2107.1	149.0	10409.0	-5252.5
5	33	42549.1	-1794.6	2191.0	-647.9	-2543.1	1740.2
	63	-31849.1	1794.6	-2191.0	647.9	-8365.8	-11287.3
6	33	40478.5	-2726.1	1141.6	-1074.8	-1250.0	2239.1
	63	-29778.5	2726.1	-1141.6	1074.8	-1814.4	-16664.9
7	33	43415.5	-3241.2	308.2	-37.1	-451.8	1946.6
	63	-32715.5	3241.2	-308.2	37.1	-1197.2	-19287.1
8	33	39220.9	-4788.3	314.8	-33.5	-585.2	2231.9
	63	-28520.9	4788.3	-314.8	33.5	-1099.0	-27849.1
9	33	41171.2	-3180.3	324.7	-36.5	-518.5	1750.8
	63	-30471.2	3180.3	-324.7	36.5	-1218.7	-18765.6
10	33	42428.1	-554.9	-1379.2	-106.1	555.4	1118.1
	63	-31728.1	554.9	1379.2	106.1	6823.6	-4086.6
11	33	43648.5	-771.8	291.6	-43.8	-310.9	1130.4
	63	-32948.5	771.8	-291.6	43.8	-1249.1	-5259.5
12	33	41975.0	-1555.1	297.5	-41.8	-378.4	1294.4
	63	-31275.0	1555.1	-297.5	41.8	-1213.0	-9614.1
13	33	42322.6	-755.8	235.2	-47.4	-194.5	1195.7
	63	-31622.6	755.8	-235.2	47.4	-1064.0	-5239.4
14	33	42616.4	-708.4	-41.3	-56.3	-150.3	1071.6
	63	-31916.4	708.4	41.3	56.3	371.5	-4861.6
15	33	41465.2	-4849.1	298.3	-34.2	-518.5	2427.8
	63	-30765.2	4849.1	-298.3	34.2	-1077.5	-28370.7
16	33	42576.6	-1877.1	2348.0	-695.5	-2747.6	1771.2
	63	-31876.6	1877.1	-2348.0	695.5	-8952.1	-11768.6
17	33	40342.3	-2881.9	1214.8	-1158.0	-1339.5	2287.1
	63	-29642.3	2881.9	-1214.8	1158.0	-1877.2	-17576.6
1	17	9059.2	-366.5	0.1	-0.1	6.0	-1618.2
	46	-8489.1	366.5	-0.1	0.1	-7.1	-1662.0
2	17	8112.7	-601.6	0.3	-0.2	6.8	-2646.6

Comb.	Nodo	N [kg]	T1-2 [kg]	T1-3 [kg]	Mt [kgm]	M1-3 [kgm]	M1-2 [kgm]
	46	-7542.6	601.6	-0.3	0.2	-9.8	-2738.0
3	17	8822.6	-365.6	0.2	-0.1	5.7	-1617.8
	46	-8252.5	365.6	-0.2	0.1	-7.1	-1654.1
4	17	8458.4	-54.5	-1686.8	0.0	2827.2	-240.2
	46	-7888.3	54.5	-1602.3	-0.0	-2449.2	-247.5
5	17	5476.2	-25.8	25.2	-0.1	-192.7	-103.0
	46	-5037.6	25.8	-25.2	0.1	-36.8	-127.5
6	17	5482.6	-129.4	0.9	-0.2	-5.7	-559.2
	46	-5044.0	129.4	-0.9	0.2	-2.9	-598.8
7	17	6634.2	-246.9	0.0	-0.1	4.3	-1088.0
	46	-6195.7	246.9	-0.0	0.1	-4.6	-1121.9
8	17	6003.3	-403.7	0.2	-0.1	4.8	-1773.6
	46	-5564.7	403.7	-0.2	0.1	-6.4	-1839.3
9	17	6476.5	-246.3	0.1	-0.1	4.1	-1087.7
	46	-6038.0	246.3	-0.1	0.1	-4.6	-1116.7
10	17	6233.7	-38.9	-1124.6	-0.0	1885.0	-169.3
	46	-5795.2	38.9	-1068.2	0.0	-1632.6	-178.9
11	17	6580.2	-13.0	-0.2	-0.0	2.8	-61.5
	46	-6141.6	13.0	0.2	0.0	-1.1	-54.4
12	17	6358.4	-91.1	-0.1	-0.0	3.1	-404.1
	46	-5919.8	91.1	0.1	0.0	-2.1	-411.6
13	17	5746.2	-16.3	-0.3	-0.0	2.5	-64.9
	46	-5307.7	16.3	0.3	0.0	-0.1	-80.6
14	17	6404.4	-18.2	-225.1	-0.0	379.1	-83.2
	46	-5965.9	18.2	-213.5	0.0	-327.4	-79.5
15	17	6161.0	-404.3	0.2	-0.1	5.0	-1773.9
	46	-5722.4	404.3	-0.2	0.1	-6.3	-1844.5
16	17	5466.4	-26.6	27.3	-0.1	-208.6	-106.7
	46	-5027.9	26.6	-27.3	0.1	-41.5	-131.5
17	17	5473.1	-139.3	1.1	-0.2	-6.4	-602.7
	46	-5034.6	139.3	-1.1	0.2	-3.3	-644.0
1	46	1828.9	-1058.8	8.5	-0.2	-40.0	-2995.4
	88	-1621.9	1058.8	-8.5	0.2	12.5	-445.7
2	46	1636.3	-1723.9	10.1	-0.3	-52.0	-4881.1
	88	-1429.3	1723.9	-10.1	0.3	19.2	-721.5
3	46	1831.0	-1052.6	9.1	-0.2	-42.4	-2983.0
	88	-1624.0	1052.6	-9.1	0.2	12.9	-437.9
4	46	1875.3	-174.1	-1150.9	1.8	1618.5	-476.7
	88	-1668.3	174.1	-43.4	-1.8	181.2	-89.1
5	46	1221.1	-103.9	7.8	-0.1	15.4	-285.4
	88	-1061.8	103.9	-7.8	0.1	-29.7	-52.6
6	46	1281.7	-384.4	7.3	-0.3	-15.6	-1077.2
	88	-1122.4	384.4	-7.3	0.3	0.5	-177.5
7	46	1359.9	-717.6	5.9	-0.1	-27.9	-2028.8
	88	-1200.6	717.6	-5.9	0.1	8.7	-303.3
8	46	1231.5	-1161.0	7.0	-0.2	-35.8	-3286.0

Comb.	Nodo	N [kg]	T1-2 [kg]	T1-3 [kg]	Mt [kgm]	M1-3 [kgm]	M1-2 [kgm]
	88	-1072.2	1161.0	-7.0	0.2	13.2	-487.2
9	46	1361.3	-713.4	6.3	-0.1	-29.4	-2020.6
	88	-1202.0	713.4	-6.3	0.1	9.0	-298.1
10	46	1390.8	-127.8	-767.1	1.2	1077.9	-349.7
	88	-1231.6	127.8	-29.2	-1.2	121.2	-65.6
11	46	1426.2	-56.4	4.2	-0.1	-16.1	-157.4
	88	-1266.9	56.4	-4.2	0.1	2.5	-25.8
12	46	1376.2	-277.2	4.8	-0.1	-20.2	-783.4
	88	-1216.9	277.2	-4.8	0.1	4.7	-117.4
13	46	1259.4	-73.3	2.9	-0.0	-11.7	-199.6
	88	-1100.1	73.3	-2.9	0.0	2.4	-38.6
14	46	1408.0	-70.5	-150.1	0.2	202.5	-196.2
	88	-1248.8	70.5	-9.2	-0.2	26.3	-33.0
15	46	1230.1	-1165.1	6.6	-0.2	-34.3	-3294.2
	88	-1070.8	1165.1	-6.6	0.2	12.9	-492.3
16	46	1222.0	-106.1	7.9	-0.1	18.9	-291.7
	88	-1062.8	106.1	-7.9	0.1	-33.3	-53.9
17	46	1290.4	-410.4	7.6	-0.4	-15.6	-1149.8
	88	-1131.2	410.4	-7.6	0.4	0.0	-190.4
1	88	1533.6	142.8	4.3	-0.2	-13.4	314.6
	109	-1533.6	-142.8	-4.3	0.2	9.1	-171.8
2	88	1336.1	222.6	5.3	-0.3	-20.5	506.5
	109	-1336.1	-222.6	-5.3	0.3	15.2	-283.9
3	88	1535.8	140.4	4.7	-0.3	-13.9	306.9
	109	-1535.8	-140.4	-4.7	0.3	9.2	-166.5
4	88	1588.5	43.9	-41.3	2.2	-159.6	71.1
	109	-1588.5	-43.9	41.3	-2.2	200.9	-27.3
5	88	1003.5	24.6	-1.3	-0.1	29.3	41.9
	109	-1003.5	-24.6	1.3	0.1	-30.1	-17.3
6	88	1064.4	63.9	2.5	-0.4	-0.8	135.2
	109	-1064.4	-63.9	-2.5	0.4	-0.1	-71.6
7	88	1134.1	98.2	3.0	-0.2	-9.4	214.7
	109	-1134.1	-98.2	-3.0	0.2	6.4	-116.5
8	88	1002.4	151.3	3.6	-0.2	-14.1	342.6
	109	-1002.4	-151.3	-3.6	0.2	10.4	-191.2
9	88	1135.6	96.6	3.3	-0.2	-9.7	209.5
	109	-1135.6	-96.6	-3.3	0.2	6.4	-113.0
10	88	1170.7	32.2	-27.5	1.4	-106.8	52.4
	109	-1170.7	-32.2	27.5	-1.4	134.2	-20.2
11	88	1206.5	17.4	2.0	-0.1	-2.9	20.0
	109	-1206.5	-17.4	-2.0	0.1	0.9	-2.6
12	88	1154.7	43.9	2.4	-0.1	-5.2	83.7
	109	-1154.7	-43.9	-2.4	0.1	2.8	-39.8
13	88	1041.0	20.7	1.3	-0.1	-2.7	31.3
	109	-1041.0	-20.7	-1.3	0.1	1.4	-10.6
14	88	1188.4	20.1	-3.8	0.2	-23.8	25.7

Comb.	Nodo	N [kg]	T1-2 [kg]	T1-3 [kg]	Mt [kgm]	M1-3 [kgm]	M1-2 [kgm]
	109	-1188.4	-20.1	3.8	-0.2	27.6	-5.6
15	88	1000.9	153.0	3.4	-0.2	-13.7	347.7
	109	-1000.9	-153.0	-3.4	0.2	10.3	-194.8
16	88	1004.5	25.0	-1.6	-0.1	33.0	42.9
	109	-1004.5	-25.0	1.6	0.1	-33.4	-18.0
17	88	1073.2	68.0	2.6	-0.4	-0.4	145.7
	109	-1073.2	-68.0	-2.6	0.4	-0.4	-78.0
1	109	1412.6	-4.9	1.1	-0.3	-10.1	45.6
	131	-1412.6	4.9	-1.1	0.3	9.0	-50.5
2	109	1209.8	-11.4	1.8	-0.3	-16.5	76.5
	131	-1209.8	11.4	-1.8	0.3	14.7	-88.0
3	109	1414.9	-5.8	1.2	-0.3	-10.2	40.1
	131	-1414.9	5.8	-1.2	0.3	9.0	-45.9
4	109	1476.8	11.3	-34.2	2.1	-180.6	10.6
	131	-1476.8	-11.3	34.2	-2.1	214.8	0.7
5	109	920.9	7.4	-2.9	-0.1	29.8	8.5
	131	-920.9	-7.4	2.9	0.1	-29.6	-1.3
6	109	982.1	18.7	1.1	-0.4	-0.2	41.6
	131	-982.1	-18.7	-1.1	0.4	0.9	-26.2
7	109	1042.6	-2.3	0.7	-0.2	-7.0	31.2
	131	-1042.6	2.3	-0.7	0.2	6.3	-33.5
8	109	907.3	-6.6	1.2	-0.2	-11.3	51.8
	131	-907.3	6.6	-1.2	0.2	10.1	-58.5
9	109	1044.1	-2.9	0.8	-0.2	-7.1	27.5
	131	-1044.1	2.9	-0.8	0.2	6.3	-30.4
10	109	1085.3	8.5	-22.8	1.4	-120.7	7.9
	131	-1085.3	-8.5	22.8	-1.4	143.5	0.6
11	109	1121.5	4.3	0.2	-0.1	-1.2	-2.8
	131	-1121.5	-4.3	-0.2	0.1	1.0	7.1
12	109	1067.8	2.0	0.4	-0.1	-3.3	7.4
	131	-1067.8	-2.0	-0.4	0.1	2.9	-5.4
13	109	957.3	6.1	0.1	-0.1	-1.6	3.8
	131	-957.3	-6.1	-0.1	0.1	1.6	2.3
14	109	1103.4	5.1	-4.4	0.2	-25.1	-1.4
	131	-1103.4	-5.1	4.4	-0.2	29.5	6.5
15	109	905.8	-6.0	1.1	-0.2	-11.2	55.6
	131	-905.8	6.0	-1.1	0.2	10.1	-61.6
16	109	921.8	7.6	-3.3	0.1	33.1	9.2
	131	-921.8	-7.6	3.3	-0.1	-32.5	-1.8
17	109	991.0	20.6	1.1	0.3	0.1	47.1
	131	-991.0	-20.6	-1.1	-0.3	0.7	-29.9
1	131	1291.2	-71.2	-1.4	-0.3	-9.9	-75.0
	152	-1291.2	71.2	1.4	0.3	11.3	3.8
2	131	1082.7	-108.4	-0.6	-0.3	-16.0	-118.2
	152	-1082.7	108.4	0.6	0.3	16.6	9.8

Comb.	Nodo	N [kg]	T1-2 [kg]	T1-3 [kg]	Mt [kgm]	M1-3 [kgm]	M1-2 [kgm]
3	131	1293.5	-71.2	-1.7	-0.3	-9.9	-80.0
	152	-1293.5	71.2	1.7	0.3	11.6	8.8
4	131	1364.9	-12.2	-113.8	1.9	-195.6	-17.2
	152	-1364.9	12.2	113.8	-1.9	309.4	5.0
5	131	838.2	-4.1	-4.1	-0.1	29.4	-11.6
	152	-838.2	4.1	4.1	0.1	-28.8	2.7
6	131	900.2	-23.8	0.1	0.2	-1.2	-41.2
	152	-900.2	23.8	-0.1	-0.2	2.9	-19.2
7	131	950.7	-47.3	-1.0	-0.2	-6.9	-51.3
	152	-950.7	47.3	1.0	0.2	7.9	3.9
8	131	811.7	-72.1	-0.5	-0.2	-11.0	-80.1
	152	-811.7	72.1	0.5	0.2	11.5	8.0
9	131	952.2	-47.3	-1.2	-0.2	-6.9	-54.6
	152	-952.2	47.3	1.2	0.2	8.1	7.3
10	131	999.8	-8.0	-75.9	1.2	-130.7	-12.7
	152	-999.8	8.0	75.9	-1.2	206.6	4.7
11	131	1036.4	-7.3	-1.7	-0.1	-1.2	-12.7
	152	-1036.4	7.3	1.7	0.1	2.9	5.4
12	131	980.7	-20.0	-1.5	-0.2	-3.2	-27.0
	152	-980.7	20.0	1.5	0.2	4.7	7.0
13	131	873.6	-3.6	-1.0	-0.1	-1.8	-9.0
	152	-873.6	3.6	1.0	0.1	2.8	5.4
14	131	1018.3	-7.2	-16.6	0.1	-27.2	-13.5
	152	-1018.3	7.2	16.6	-0.1	43.7	6.3
15	131	810.1	-72.1	-0.3	-0.2	-11.0	-76.7
	152	-810.1	72.1	0.3	0.2	11.3	4.6
16	131	839.3	-4.2	-4.4	-0.1	32.3	-12.1
	152	-839.3	4.2	4.4	0.1	-31.5	2.2
17	131	909.1	-25.7	0.1	0.2	-1.0	-45.3
	152	-909.1	25.7	-0.1	-0.2	2.9	-22.9
1	152	1169.1	47.6	-3.6	-0.3	-12.1	-129.9
	165	-1169.1	-47.6	3.6	0.3	15.7	177.5
2	152	954.8	96.4	-2.2	-0.3	-17.8	-217.3
	165	-954.8	-96.4	2.2	0.3	20.1	313.7
3	152	1171.4	46.5	-4.6	-0.3	-12.4	-135.6
	165	-1171.4	-46.5	4.6	0.3	17.0	182.1
4	152	1252.9	-5.1	-274.7	1.5	-291.9	-21.6
	165	-1252.9	5.1	274.7	-1.5	566.7	16.5
5	152	755.7	12.0	-5.0	-0.1	28.8	-17.7
	165	-755.7	-12.0	5.0	0.1	-28.1	23.6
6	152	818.5	21.9	-0.8	0.2	-3.1	-59.4
	165	-818.5	-21.9	0.8	-0.2	5.7	79.3
7	152	858.4	33.4	-2.5	-0.2	-8.5	-89.2
	165	-858.4	-33.4	2.5	0.2	11.0	122.7
8	152	715.5	66.0	-1.6	-0.2	-12.3	-147.5
	165	-715.5	-66.0	1.6	0.2	13.9	213.4

Comb.	Nodo	N [kg]	T1-2 [kg]	T1-3 [kg]	Mt [kgm]	M1-3 [kgm]	M1-2 [kgm]
9	152	859.9	32.7	-3.2	-0.2	-8.7	-93.0
	165	-859.9	-32.7	3.2	0.2	11.9	125.7
10	152	914.2	-1.7	-183.3	1.0	-195.0	-17.0
	165	-914.2	1.7	183.3	-1.0	378.3	15.3
11	152	951.1	-9.0	-4.0	-0.1	-3.1	-11.1
	165	-951.1	9.0	4.0	0.1	7.0	2.1
12	152	893.3	6.5	-3.6	-0.2	-5.0	-39.7
	165	-893.3	-6.5	3.6	0.2	8.5	46.1
13	152	789.9	1.2	-2.1	-0.1	-2.9	-12.2
	165	-789.9	-1.2	2.1	0.1	5.0	13.4
14	152	933.1	-7.1	-39.9	0.1	-41.5	-13.6
	165	-933.1	7.1	39.9	-0.1	81.4	6.5
15	152	714.0	66.7	-0.9	-0.2	-12.1	-143.7
	165	-714.0	-66.7	0.9	0.2	13.0	210.4
16	152	756.7	12.8	-5.2	-0.1	31.4	-18.3
	165	-756.7	-12.8	5.2	0.1	-30.5	51.3
17	152	827.4	23.8	-0.7	0.2	-3.1	-64.4
	165	-827.4	-23.8	0.7	-0.2	5.9	94.0
1	165	1078.1	-320.3	-5.8	-0.1	-16.5	-306.5
	198	-712.5	320.3	5.8	0.1	49.8	-1531.8
2	165	857.8	-537.6	-3.3	-0.1	-21.2	-526.5
	198	-492.1	537.6	3.3	0.1	39.9	-2559.4
3	165	1080.4	-323.0	-7.9	-0.1	-17.7	-312.0
	198	-714.7	323.0	7.9	0.1	62.8	-1542.1
4	165	1172.4	-37.6	-688.3	0.3	-554.0	-33.3
	198	-806.8	37.6	-1421.2	-0.3	-1549.5	-182.5
5	165	655.4	-30.3	-6.9	-0.2	28.1	-34.6
	198	-374.1	30.3	6.9	0.2	1.2	-139.5
6	165	620.9	-117.5	-2.9	0.1	-5.8	-121.8
	198	-339.6	117.5	2.9	-0.1	6.6	-555.1
7	165	790.1	-217.7	-4.0	-0.1	-11.5	-209.9
	198	-508.8	217.7	4.0	0.1	34.7	-1039.4
8	165	643.2	-362.6	-2.3	-0.1	-14.7	-356.6
	198	-361.9	362.6	2.3	0.1	28.1	-1724.5
9	165	791.6	-219.5	-5.4	-0.1	-12.4	-213.6
	198	-510.3	219.5	5.4	0.1	43.3	-1046.3
10	165	852.9	-29.2	-459.0	0.2	-369.9	-27.8
	198	-571.7	29.2	-947.3	-0.2	-1031.5	-139.9
11	165	890.0	-10.5	-6.9	-0.1	-7.1	-7.9
	198	-608.8	10.5	6.9	0.1	46.8	-52.5
12	165	830.1	-82.0	-6.2	-0.1	-8.8	-79.6
	198	-548.9	82.0	6.2	0.1	44.2	-391.3
13	165	730.6	-18.4	-3.4	-0.0	-5.1	-20.5
	198	-449.3	18.4	3.4	0.0	24.7	-85.3
14	165	872.1	-15.4	-97.5	-0.0	-79.8	-13.8
	198	-590.8	15.4	-183.7	0.0	-167.7	-74.4

Comb.	Nodo	N [kg]	T1-2 [kg]	T1-3 [kg]	Mt [kgm]	M1-3 [kgm]	M1-2 [kgm]
15	165	641.7	-360.7	-1.0	-0.0	-13.8	-353.0
	198	-360.4	360.7	1.0	0.0	19.4	-1717.7
16	165	698.6	-31.2	-7.1	-0.2	30.5	-35.7
	198	-417.4	31.2	7.1	0.2	0.0	-143.3
17	165	770.5	-125.9	-2.9	0.1	-6.0	-131.1
	198	-489.2	125.9	2.9	-0.1	5.6	-594.4
1	18	43913.2	-5153.1	-206.3	-1642.4	1797.1	-35494.5
	47	-43628.1	5153.1	206.3	1642.4	49.7	-10625.5
2	18	46750.4	-8672.9	-338.0	-2132.1	2676.3	-58527.9
	47	-46465.3	8672.9	338.0	2132.1	348.6	-19094.5
3	18	43500.9	-5161.0	-212.2	-1768.8	1830.9	-35604.8
	47	-43215.8	5161.0	212.2	1768.8	68.2	-10586.2
4	18	30858.8	-531.6	-4656.7	573.4	29990.8	-4589.1
	47	-30573.8	531.6	3012.1	-573.4	4327.3	-168.4
5	18	17050.8	-114.5	1669.5	-1188.6	-12862.8	-1355.4
	47	-16831.5	114.5	-1669.5	1188.6	-2423.9	319.2
6	18	20408.7	-1763.4	-79.9	-1890.2	880.3	-11878.9
	47	-20189.4	1763.4	79.9	1890.2	9.3	-4030.3
7	18	30818.8	-3440.0	-140.4	-1124.6	1220.6	-23735.1
	47	-30599.6	3440.0	140.4	1124.6	36.4	-7052.9
8	18	32710.3	-5786.6	-228.2	-1451.0	1806.7	-39090.8
	47	-32491.0	5786.6	228.2	1451.0	235.7	-12698.9
9	18	30544.0	-3445.3	-144.3	-1208.8	1243.1	-23808.7
	47	-30324.7	3445.3	144.3	1208.8	48.7	-7026.7
10	18	22115.9	-359.0	-3107.3	352.6	20016.4	-3131.5
	47	-21896.7	359.0	2011.0	-352.6	2888.1	-81.5
11	18	23417.3	43.7	-17.0	-634.7	325.3	-752.8
	47	-23198.1	-43.7	17.0	634.7	-173.2	1144.1
12	18	24839.7	-1126.1	-60.4	-807.3	622.6	-8433.1
	47	-24620.4	1126.1	60.4	807.3	-82.2	-1645.7
13	18	18328.5	12.5	-16.3	-390.9	239.4	-606.2
	47	-18109.3	-12.5	16.3	390.9	-93.8	718.0
14	18	22720.8	-40.6	-636.2	-446.5	4264.6	-1241.3
	47	-22501.5	40.6	416.9	446.5	448.3	877.7
15	18	32985.2	-5781.3	-224.3	-1366.7	1784.2	-39017.2
	47	-32765.9	5781.3	224.3	1366.7	223.3	-12725.1
16	18	17030.9	-129.4	1814.5	-1259.5	-13934.7	-1442.5
	47	-16811.6	129.4	-1814.5	1259.5	-2756.1	270.7
17	18	20666.9	-1932.1	-84.1	-2017.7	931.9	-12908.9
	47	-20447.6	1932.1	84.1	2017.7	3.8	-4534.9
1	47	23780.6	-318.5	-250.4	-4692.1	372.2	-5742.0
	74	-23677.1	318.5	250.4	4692.1	441.5	4706.8
2	47	22135.4	-781.9	-290.7	-6347.2	188.0	-10261.5
	74	-22031.9	781.9	290.7	6347.2	756.9	7720.4
3	47	24506.0	-320.9	-253.4	-4985.8	367.5	-5848.5

Comb.	Nodo	N [kg]	T1-2 [kg]	T1-3 [kg]	Mt [kgm]	M1-3 [kgm]	M1-2 [kgm]
	74	-24402.5	320.9	253.4	4985.8	456.1	4805.6
4	47	18981.7	394.4	-946.5	800.2	-4729.1	815.7
	74	-18878.2	-394.4	349.3	-800.2	6834.8	466.0
5	47	8121.7	132.5	-280.8	-1826.1	2428.2	-1246.0
	74	-8042.1	-132.5	280.8	1826.1	-2083.8	409.3
6	47	9366.5	383.3	27.0	-2647.4	120.8	-2777.3
	74	-9286.9	-383.3	-27.0	2647.4	6.5	1995.3
7	47	16385.1	-206.4	-176.1	-3209.4	260.1	-3848.5
	74	-16305.5	206.4	176.1	3209.4	312.3	3177.7
8	47	15288.3	-515.3	-203.0	-4312.8	137.3	-6861.5
	74	-15208.7	515.3	203.0	4312.8	522.5	5186.7
9	47	16868.7	-208.0	-178.1	-3405.2	256.9	-3919.4
	74	-16789.1	208.0	178.1	3405.2	322.0	3243.5
10	47	13185.9	268.9	-640.2	452.2	-3140.8	523.3
	74	-13106.2	-268.9	242.1	-452.2	4574.4	350.4
11	47	15026.7	200.4	-121.1	-1557.7	349.1	369.8
	74	-14947.1	-200.4	121.1	1557.7	44.5	281.4
12	47	14865.8	52.0	-136.4	-2130.7	297.9	-1111.1
	74	-14786.1	-52.0	136.4	2130.7	145.4	1280.2
13	47	9758.3	132.0	-96.4	-996.3	235.5	186.5
	74	-9678.7	-132.0	96.4	996.3	77.8	242.4
14	47	14445.3	208.9	-223.9	-1177.8	-357.7	365.9
	74	-14365.6	-208.9	144.2	1177.8	955.8	312.9
15	47	14804.7	-513.8	-201.0	-4117.0	140.4	-6790.6
	74	-14725.1	513.8	201.0	4117.0	512.8	5120.9
16	47	8076.1	135.5	-315.7	-1909.2	2763.1	-1418.5
	74	-7996.4	-135.5	315.7	1909.2	-2325.9	428.3
17	47	9427.8	422.3	35.0	-2802.4	126.2	-3134.7
	74	-9348.2	-422.3	-35.0	2802.4	-10.3	2189.0
1	74	23598.9	-2083.0	-248.4	-4699.9	-440.4	-4772.2
	95	-23598.9	2083.0	248.4	4699.9	688.8	2689.1
2	74	21922.6	-3510.7	-289.2	-6355.4	-755.4	-7822.6
	95	-21922.6	3510.7	289.2	6355.4	1044.7	4311.9
3	74	24324.2	-2076.4	-251.1	-4994.6	-454.9	-4871.0
	95	-24324.2	2076.4	251.1	4994.6	706.0	2794.6
4	74	18840.9	-38.8	-119.9	583.3	-6849.6	-482.7
	95	-18840.9	38.8	119.9	-583.3	6969.5	444.0
5	74	8012.9	-100.9	-279.8	-1828.3	2084.3	-422.2
	95	-8012.9	100.9	279.8	1828.3	-1997.1	328.3
6	74	9247.0	-681.7	26.9	-2649.7	-5.9	-2020.6
	95	-9247.0	681.7	-26.9	2649.7	140.8	1395.3
7	74	16249.5	-1397.7	-174.7	-3214.8	-311.5	-3223.0
	95	-16249.5	1397.7	174.7	3214.8	486.2	1825.3
8	74	15132.0	-2349.5	-201.9	-4318.5	-521.5	-5256.6
	95	-15132.0	2349.5	201.9	4318.5	723.5	2907.1
9	74	16733.0	-1393.3	-176.5	-3411.3	-321.2	-3288.9

Comb.	Nodo	N [kg]	T1-2 [kg]	T1-3 [kg]	Mt [kgm]	M1-3 [kgm]	M1-2 [kgm]
	95	-16733.0	1393.3	176.5	3411.3	497.7	1895.6
10	74	13077.5	-34.9	-89.1	307.3	-4584.3	-363.4
	95	-13077.5	34.9	89.1	-307.3	4673.3	328.5
11	74	14921.1	10.5	-119.3	-1562.6	-44.1	-291.1
	95	-14921.1	-10.5	119.3	1562.6	163.3	301.6
12	74	14749.9	-462.8	-134.7	-2135.9	-144.9	-1302.1
	95	-14749.9	462.8	134.7	2135.9	279.6	839.3
13	74	9651.5	-27.5	-95.3	-999.3	-77.5	-253.6
	95	-9651.5	27.5	95.3	999.3	172.7	226.1
14	74	14339.0	0.1	-112.1	-1210.7	-957.4	-323.4
	95	-14339.0	-0.1	112.1	1210.7	1069.6	323.6
15	74	14648.5	-2353.9	-200.1	-4122.0	-511.8	-5190.7
	95	-14648.5	2353.9	200.1	4122.0	711.9	2836.8
16	74	7967.1	-105.7	-315.0	-1911.4	2326.4	-441.3
	95	-7967.1	105.7	315.0	1911.4	-2217.6	344.3
17	74	9307.3	-739.8	34.7	-2804.8	11.0	-2215.1
	95	-9307.3	739.8	-34.7	2804.8	128.4	1541.2
1	95	23506.1	-2711.5	-246.7	-4708.1	-687.6	-2760.5
	117	-23506.1	2711.5	246.7	4708.1	934.3	49.0
2	95	21799.5	-4357.7	-288.1	-6364.4	-1043.2	-4419.9
	117	-21799.5	4357.7	288.1	6364.4	1331.3	62.2
3	95	24231.3	-2689.4	-249.1	-5003.9	-704.8	-2866.1
	117	-24231.3	2689.4	249.1	5003.9	953.9	176.7
4	95	18788.1	-312.3	250.6	263.6	-6983.6	-467.0
	117	-18788.1	312.3	-250.6	-263.6	6732.9	154.6
5	95	7971.6	-216.7	-279.1	-1830.1	1997.7	-346.0
	117	-7971.6	216.7	279.1	1830.1	-1921.0	7.0
6	95	9195.2	-928.8	27.0	-2651.5	-140.0	-1424.0
	117	-9195.2	928.8	-27.0	2651.5	311.9	-614.1
7	95	16182.2	-1823.4	-173.5	-3220.5	-485.4	-1875.3
	117	-16182.2	1823.4	173.5	3220.5	658.9	51.8
8	95	15044.5	-2920.9	-201.1	-4324.6	-722.4	-2981.6
	117	-15044.5	2920.9	201.1	4324.6	923.6	60.7
9	95	16665.6	-1808.7	-175.1	-3417.7	-496.9	-1945.7
	117	-16665.6	1808.7	175.1	3417.7	672.0	137.0
10	95	13036.9	-224.0	158.0	94.0	-4682.7	-346.2
	117	-13036.9	224.0	-158.0	-94.0	4524.7	122.3
11	95	14883.0	-143.5	-117.6	-1567.5	-162.9	-316.2
	117	-14883.0	143.5	117.6	1567.5	280.5	172.8
12	95	14701.8	-694.3	-133.2	-2141.1	-279.0	-866.0
	117	-14701.8	694.3	133.2	2141.1	412.2	171.7
13	95	9612.2	-142.6	-94.3	-1002.0	-172.4	-242.3
	117	-9612.2	142.6	94.3	1002.0	266.7	99.6
14	95	14300.3	-154.9	-61.3	-1257.4	-1071.1	-339.0
	117	-14300.3	154.9	61.3	1257.4	1132.4	184.1
15	95	14561.0	-2935.7	-199.6	-4127.4	-710.9	-2911.2

Comb.	Nodo	N [kg]	T1-2 [kg]	T1-3 [kg]	Mt [kgm]	M1-3 [kgm]	M1-2 [kgm]
	117	-14561.0	2935.7	199.6	4127.4	910.5	-24.5
16	95	7925.6	-222.1	-314.4	-1913.1	2218.2	-362.0
	117	-7925.6	222.1	314.4	1913.1	-2124.0	-8.2
17	95	9254.5	-997.2	34.7	-2806.6	-127.6	-1570.6
	117	-9254.5	997.2	-34.7	2806.6	309.0	-724.5
1	117	23413.5	-2825.3	-245.4	-4716.8	-933.2	-120.3
	138	-23413.5	2825.3	245.4	4716.8	1178.5	-2705.0
2	117	21676.7	-4338.7	-287.4	-6374.1	-1329.8	-170.3
	138	-21676.7	4338.7	287.4	6374.1	1617.2	-4168.4
3	117	24138.5	-2771.8	-247.2	-5013.9	-952.7	-248.3
	138	-24138.5	2771.8	247.2	5013.9	1199.9	-2523.5
4	117	18735.3	-533.0	667.9	-117.8	-6746.2	-177.6
	138	-18735.3	533.0	-667.9	117.8	6078.2	-355.4
5	117	7930.2	-325.7	-278.4	-1831.6	1921.5	277.4
	138	-7930.2	325.7	278.4	1831.6	-1858.1	-232.8
6	117	9143.2	-1037.9	27.1	-2652.9	-311.1	691.2
	138	-9143.2	1037.9	-27.1	2652.9	506.2	-1023.7
7	117	16115.0	-1905.7	-172.6	-3226.4	-658.1	-101.8
	138	-16115.0	1905.7	172.6	3226.4	830.7	-1803.9
8	117	14957.2	-2914.6	-200.6	-4331.3	-922.5	-135.1
	138	-14957.2	2914.6	200.6	4331.3	1123.1	-2779.4
9	117	16598.4	-1870.0	-173.8	-3424.5	-671.1	-187.1
	138	-16598.4	1870.0	173.8	3424.5	845.0	-1682.9
10	117	12996.2	-377.4	436.3	-160.4	-4533.5	-140.0
	138	-12996.2	377.4	-436.3	160.4	4097.2	-237.4
11	117	14844.8	-289.3	-115.9	-1572.6	-280.1	-187.4
	138	-14844.8	289.3	115.9	1572.6	396.0	-101.8
12	117	14653.7	-801.2	-131.7	-2146.6	-411.7	-198.5
	138	-14653.7	801.2	131.7	2146.6	543.4	-602.7
13	117	9572.9	-259.5	-93.5	-1004.8	-266.4	-115.8
	138	-9572.9	259.5	93.5	1004.8	359.9	-143.7
14	117	14261.5	-293.8	-4.3	-1312.4	-1133.8	-199.5
	138	-14261.5	293.8	4.3	1312.4	1138.2	-94.3
15	117	14473.8	-2950.3	-199.4	-4133.2	-909.5	-49.8
	138	-14473.8	2950.3	199.4	4133.2	1108.9	-2900.4
16	117	7884.1	-330.9	-313.8	-1914.6	2124.6	-7.6
	138	-7884.1	330.9	313.8	1914.6	-2048.7	-245.2
17	117	9201.5	-1105.7	34.7	-2808.0	-308.1	711.7
	138	-9201.5	1105.7	-34.7	2808.0	515.9	-1123.6
1	138	23321.2	-2384.6	-244.1	-4726.1	-1177.4	2634.1
	166	-23321.2	2384.6	244.1	4726.1	1421.5	-5018.8
2	138	21554.1	-3403.4	-286.9	-6384.6	-1615.7	4060.8
	166	-21554.1	3403.4	286.9	6384.6	1902.5	-7464.2
3	138	24045.9	-2278.7	-245.4	-5024.6	-1198.7	2452.3
	166	-24045.9	2278.7	245.4	5024.6	1444.1	-4731.0

Comb.	Nodo	N [kg]	T1-2 [kg]	T1-3 [kg]	Mt [kgm]	M1-3 [kgm]	M1-2 [kgm]
4	138	18682.7	-684.2	1128.9	-557.0	-6090.1	332.6
	166	-18682.7	684.2	-1128.9	557.0	4961.2	-1016.8
5	138	7888.8	-419.6	-277.7	-1833.0	1858.6	215.4
	166	-7888.8	419.6	277.7	1833.0	-1810.0	-618.9
6	138	9091.1	-992.6	27.2	-2654.0	-505.3	995.5
	166	-9091.1	992.6	-27.2	2654.0	713.1	-1854.2
7	138	16048.0	-1617.2	-171.7	-3232.8	-830.0	1754.2
	166	-16048.0	1617.2	171.7	3232.8	1001.7	-3371.4
8	138	14869.9	-2296.4	-200.2	-4338.5	-1122.1	2705.3
	166	-14869.9	2296.4	200.2	4338.5	1322.4	-5001.6
9	138	16531.1	-1546.6	-172.6	-3431.8	-844.2	1633.0
	166	-16531.1	1546.6	172.6	3431.8	1016.7	-3179.5
10	138	12955.6	-483.6	743.6	-453.4	-4105.1	219.8
	166	-12955.6	483.6	-743.6	453.4	3361.4	-703.4
11	138	14806.7	-408.7	-114.2	-1577.9	-395.6	87.2
	166	-14806.7	408.7	114.2	1577.9	509.8	-495.9
12	138	14605.7	-761.5	-130.2	-2152.4	-542.9	576.0
	166	-14605.7	761.5	130.2	2152.4	673.0	-1337.5
13	138	9533.5	-368.2	-92.7	-1007.6	-359.7	127.6
	166	-9533.5	368.2	92.7	1007.6	452.4	-495.8
14	138	14222.8	-399.0	58.6	-1375.4	-1139.4	78.9
	166	-14222.8	399.0	-58.6	1375.4	1080.9	-477.9
15	138	14386.7	-2367.0	-199.4	-4139.4	-1107.9	2826.5
	166	-14386.7	2367.0	199.4	4139.4	1307.3	-5193.5
16	138	7842.5	-423.6	-313.1	-1915.8	2049.3	227.8
	166	-7842.5	423.6	313.1	1915.8	-1993.7	-630.9
17	138	9148.4	-1047.5	34.7	-2809.0	-514.9	1095.0
	166	-9148.4	1047.5	-34.7	2809.0	736.8	-1979.3
1	166	23153.1	-917.7	-242.8	-4736.2	-1420.4	4955.0
	180	-23153.1	917.7	242.8	4736.2	2003.1	-7157.5
2	166	21355.2	-788.7	-286.5	-6396.2	-1901.1	7363.7
	180	-21355.2	788.7	286.5	6396.2	2588.6	-9256.6
3	166	23877.5	-736.3	-243.3	-5036.4	-1443.0	4666.9
	180	-23877.5	736.3	243.3	5036.4	2026.9	-6433.9
4	166	18554.6	-689.4	2062.7	-1008.0	-4970.1	1000.7
	180	-18554.6	689.4	-2062.7	1008.0	19.6	-2655.2
5	166	7789.1	-543.0	-275.8	-1834.4	1810.5	606.1
	180	-7789.1	543.0	275.8	1834.4	-2607.4	-1664.3
6	166	8980.7	-658.9	26.5	-2654.9	-712.3	1828.0
	180	-8980.7	658.9	-26.5	2654.9	-1626.5	-3291.8
7	166	15922.7	-636.7	-170.8	-3239.7	-1000.9	3327.0
	180	-15922.7	636.7	170.8	3239.7	1410.9	-4855.1
8	166	14724.1	-550.7	-200.0	-4346.3	-1321.4	4932.8
	180	-14724.1	550.7	200.0	4346.3	1801.3	-6254.6
9	166	16405.6	-515.8	-171.2	-3439.8	-1016.0	3135.0
	180	-16405.6	515.8	171.2	3439.8	1426.8	-4372.8

Comb.	Nodo	N [kg]	T1-2 [kg]	T1-3 [kg]	Mt [kgm]	M1-3 [kgm]	M1-2 [kgm]
10	166	12857.0	-484.5	1366.1	-754.2	-3367.3	690.8
	180	-12857.0	484.5	-1366.1	754.2	88.6	-1853.6
11	166	14710.7	-464.8	-112.2	-1583.6	-509.4	486.5
	180	-14710.7	464.8	112.2	1583.6	778.8	-1601.9
12	166	14499.5	-441.8	-128.5	-2158.8	-672.5	1316.0
	180	-14499.5	441.8	128.5	2158.8	980.9	-2376.2
13	166	9436.2	-426.3	-91.9	-1010.5	-452.1	484.7
	180	-9436.2	426.3	91.9	1010.5	672.7	-1507.9
14	166	14126.1	-428.5	184.7	-1440.3	-1081.7	467.6
	180	-14126.1	428.5	-184.7	1440.3	638.4	-1496.1
15	166	14241.1	-671.7	-199.6	-4146.2	-1306.4	5124.9
	180	-14241.1	671.7	199.6	4146.2	1785.4	-6736.9
16	166	7742.7	-555.2	-311.1	-1917.1	1994.3	618.0
	180	-7742.7	555.2	311.1	1917.1	-2871.7	-1677.6
17	166	9036.9	-682.8	34.1	-2809.8	-735.9	1952.0
	180	-9036.9	682.8	-34.1	2809.8	-1819.6	-3451.9
1	180	13258.8	-917.1	-4214.4	-2282.2	-2003.1	832.1
	199	-13258.8	917.1	4214.4	2282.2	16079.1	-3895.1
2	180	13710.9	-781.9	-3585.2	-4367.1	-2588.6	4395.5
	199	-13710.9	781.9	3585.2	4367.1	14563.1	-7007.1
3	180	16233.2	-736.5	-5302.5	-1898.1	-2026.9	1571.0
	199	-16233.2	736.5	5302.5	1898.1	19737.3	-4031.0
4	180	10910.3	-664.1	-6585.5	4708.3	-19.6	-2210.6
	199	-10910.3	664.1	6585.5	-4708.3	22015.1	-7.5
5	180	2948.8	-369.7	-1242.4	-1029.7	2607.4	-1403.1
	199	-2948.8	369.7	1242.4	1029.7	2560.9	33.2
6	180	4141.6	-301.6	-1534.0	-1821.5	1626.5	225.3
	199	-4141.6	301.6	1534.0	1821.5	6296.5	-1374.4
7	180	9080.9	-636.6	-2913.1	-1546.5	-1410.9	489.1
	199	-9080.9	636.6	2913.1	1546.5	11140.5	-2615.4
8	180	9382.3	-546.5	-2493.6	-2936.4	-1801.3	2864.8
	199	-9382.3	546.5	2493.6	2936.4	10129.8	-4690.2
9	180	11063.8	-516.3	-3638.5	-1290.4	-1426.8	981.8
	199	-11063.8	516.3	3638.5	1290.4	13579.3	-2706.0
10	180	7515.2	-468.0	-4493.8	3113.8	-88.6	-1539.3
	199	-7515.2	468.0	4493.8	-3113.8	15097.8	-23.7
11	180	9368.9	-470.7	-3742.9	673.6	-778.8	-1790.9
	199	-9368.9	470.7	3742.9	-673.6	13280.0	218.9
12	180	9657.7	-445.7	-3591.5	-8.0	-980.9	-691.0
	199	-9657.7	445.7	3591.5	8.0	12976.4	-797.7
13	180	4594.4	-430.3	-1905.8	108.1	-672.7	-1559.9
	199	-4594.4	430.3	1905.8	-108.1	7038.2	122.7
14	180	9284.3	-430.0	-3991.5	1202.1	-638.4	-1571.8
	199	-9284.3	430.0	3991.5	-1202.1	13970.0	135.6
15	180	7399.4	-666.9	-1768.2	-3192.5	-1785.4	2372.1
	199	-7399.4	666.9	1768.2	3192.5	7691.0	-4599.5

Comb.	Nodo	N [kg]	T1-2 [kg]	T1-3 [kg]	Mt [kgm]	M1-3 [kgm]	M1-2 [kgm]
16	180	2902.6	-360.4	-1211.0	-1119.2	2871.7	-1389.8
	199	-2902.6	360.4	1211.0	1119.2	2298.0	26.3
17	180	4198.4	-281.8	-1539.2	-1982.4	1819.6	385.4
	199	-4198.4	281.8	1539.2	1982.4	6351.9	-1501.5
1	199	12357.5	7262.4	-4161.4	-2784.7	-16172.1	1989.2
	205	-12357.5	-7262.4	4161.4	2784.7	18336.0	1787.2
2	199	11913.9	12119.9	-3496.6	-5106.8	-14639.0	3415.7
	205	-11913.9	-12119.9	3496.6	5106.8	16457.2	2886.6
3	199	15332.2	7492.5	-5252.4	-2408.5	-19852.8	2124.5
	205	-15332.2	-7492.5	5252.4	2408.5	22584.0	1771.6
4	199	11084.9	417.4	-4847.4	2277.6	-21290.2	205.6
	205	-11084.9	-417.4	4847.4	-2277.6	23810.9	11.4
5	199	2937.2	411.7	-1266.3	-1034.2	-2534.6	-17.8
	205	-2937.2	-411.7	1266.3	1034.2	3216.6	539.9
6	199	3852.8	2409.0	-1554.6	-1889.3	-6308.7	856.3
	205	-3852.8	-2409.0	1554.6	1889.3	7111.3	959.8
7	199	8472.3	4887.1	-2877.0	-1889.7	-11205.6	1335.7
	205	-8472.3	-4887.1	2877.0	1889.7	12701.6	1205.5
8	199	8176.6	8125.4	-2433.8	-3437.8	-10183.5	2286.7
	205	-8176.6	-8125.4	2433.8	3437.8	11449.1	1938.5
9	199	10455.4	5040.5	-3604.3	-1638.9	-13659.4	1425.9
	205	-10455.4	-5040.5	3604.3	1638.9	15533.6	1195.1
10	199	7623.9	323.7	-3334.4	1485.2	-14617.6	146.7
	205	-7623.9	-323.7	3334.4	-1485.2	16351.5	21.7
11	199	9567.6	302.6	-3743.6	572.4	-13365.8	64.5
	205	-9567.6	-302.6	3743.6	-572.4	15312.5	92.8
12	199	9567.6	1908.4	-3580.4	-189.3	-13057.7	532.8
	205	-9567.6	-1908.4	3580.4	189.3	14919.5	459.6
13	199	4678.5	211.2	-1902.5	28.3	-7085.4	4.0
	205	-4678.5	-211.2	1902.5	-28.3	8074.7	105.8
14	199	9457.1	348.1	-3760.5	795.3	-13944.5	104.7
	205	-9457.1	-348.1	3760.5	-795.3	15900.0	76.3
15	199	6193.5	7972.0	-1706.5	-3688.6	-7729.7	2196.5
	205	-6193.5	-7972.0	1706.5	3688.6	8617.1	1948.9
16	199	2884.9	429.3	-1235.5	-1119.2	-2266.2	-15.6
	205	-2884.9	-429.3	1235.5	1119.2	2936.6	579.2
17	199	3878.9	2595.6	-1561.2	-2053.2	-6362.0	936.4
	205	-3878.9	-2595.6	1561.2	2053.2	7165.9	1042.5
1	19	133755.7	-6560.1	-644.7	161.6	2828.2	-42106.4
	51	-110485.7	6560.1	644.7	-161.6	2941.7	-16606.2
2	19	135912.4	-10471.9	-901.7	264.0	3883.7	-67658.6
	51	-112642.4	10471.9	901.7	-264.0	4186.2	-26064.6
3	19	135837.1	-6395.6	-688.6	195.5	2967.1	-41720.1
	51	-112567.1	6395.6	688.6	-195.5	3195.9	-15520.7
4	19	115246.3	-612.9	-4690.0	721.1	30999.1	-3757.6

Comb.	Nodo	N [kg]	T1-2 [kg]	T1-3 [kg]	Mt [kgm]	M1-3 [kgm]	M1-2 [kgm]
	51	-91976.3	612.9	4690.0	-721.1	10976.5	-1728.2
5	19	75122.0	-744.2	1625.3	-1071.6	-12861.8	-3952.2
	51	-57222.0	744.2	-1625.3	1071.6	-1682.2	-4954.7
6	19	80588.5	-2679.0	-170.7	-1636.5	1146.1	-16295.4
	51	-62688.5	2679.0	170.7	1636.5	1099.9	-8510.5
7	19	97921.5	-4427.1	-440.0	95.4	1933.3	-28326.0
	51	-80021.5	4427.1	440.0	-95.4	2004.7	-11296.9
8	19	99359.3	-7035.0	-611.3	163.7	2637.0	-45360.8
	51	-81459.3	7035.0	611.3	-163.7	2834.4	-17602.5
9	19	99309.1	-4317.5	-469.3	118.0	2025.9	-28068.4
	51	-81409.1	4317.5	469.3	-118.0	2174.2	-10573.3
10	19	85581.9	-462.4	-3136.9	468.4	20713.9	-2760.1
	51	-67681.9	462.4	3136.9	-468.4	7361.3	-1378.3
11	19	89761.0	-348.7	-192.5	-0.5	860.8	-2228.6
	51	-71861.0	348.7	192.5	0.5	861.8	-892.2
12	19	91301.1	-1659.0	-280.3	35.4	1224.8	-10777.9
	51	-73401.1	1659.0	280.3	-35.4	1284.2	-4069.7
13	19	78014.1	-450.6	-120.1	-57.5	571.4	-2269.9
	51	-60114.1	450.6	120.1	57.5	503.3	-1762.9
14	19	88545.6	-344.4	-785.5	96.4	4840.2	-2257.8
	51	-70645.7	344.4	785.5	-96.4	2189.6	-824.9
15	19	97971.7	-7144.6	-582.1	141.0	2544.4	-45618.3
	51	-80071.7	7144.6	582.1	-141.0	2665.0	-18326.2
16	19	75089.8	-776.2	1768.3	-1152.5	-13948.3	-4128.8
	51	-57189.8	776.2	-1768.3	1152.5	-1897.6	-5264.9
17	19	80992.7	-2894.4	-177.1	-1763.6	1198.3	-17576.0
	51	-63092.7	2894.4	177.1	1763.6	1168.4	-9256.5
1	51	90824.7	1515.6	732.6	-35.1	-2800.4	-8796.1
	65	-82764.7	-1515.6	-732.6	35.1	529.2	13494.5
2	51	89037.3	1963.8	1804.9	-645.1	-4058.2	-11335.7
	65	-80977.3	-1963.8	-1804.9	645.1	-1537.1	17423.5
3	51	94468.9	1822.4	614.7	161.2	-3059.0	-8007.9
	65	-86408.9	-1822.4	-614.7	-161.2	1153.6	13657.4
4	51	80737.4	59.4	11.7	1883.0	-10679.4	-4593.7
	65	-72677.4	-59.4	-11.7	-1883.0	10643.1	4777.7
5	51	47976.3	200.3	1923.3	-1114.9	1627.6	-1996.6
	65	-41776.3	-200.3	-1923.3	1114.9	-7360.5	3315.3
6	51	51489.8	-447.5	1586.9	-1734.0	-1164.7	-77.1
	65	-45289.8	447.5	-1586.9	1734.0	-4227.8	-474.0
7	51	65961.4	1009.6	436.4	-6.8	-1896.4	-6243.5
	65	-59761.4	-1009.6	-436.4	6.8	543.7	9373.2
8	51	64769.8	1308.3	1151.2	-413.5	-2735.0	-7936.6
	65	-58569.8	-1308.3	-1151.2	413.5	-833.8	11992.5
9	51	68390.9	1214.1	357.7	124.1	-2068.9	-5718.1
	65	-62190.9	-1214.1	-357.7	-124.1	960.0	9481.8
10	51	59236.6	38.7	-44.3	1271.9	-7149.1	-3441.9

Comb.	Nodo	N [kg]	T1-2 [kg]	T1-3 [kg]	Mt [kgm]	M1-3 [kgm]	M1-2 [kgm]
	65	-53036.6	-38.7	44.3	-1271.9	7286.3	3561.9
11	51	63818.7	672.5	-671.7	644.6	-748.1	-2822.7
	65	-57618.7	-672.5	671.7	-644.6	2830.3	4907.5
12	51	63929.6	832.3	-319.0	451.2	-1174.4	-3708.8
	65	-57729.6	-832.3	319.0	-451.2	2163.3	6288.8
13	51	51734.7	224.8	-490.6	320.0	-391.1	-3205.0
	65	-45534.7	-224.8	490.6	-320.0	1911.8	3902.0
14	51	62822.9	578.3	-558.1	788.3	-2057.2	-2809.8
	65	-56622.9	-578.3	558.1	-788.3	3787.4	4602.7
15	51	62340.3	1103.8	1229.9	-544.3	-2562.5	-8462.1
	65	-56140.3	-1103.8	-1229.9	544.3	-1250.0	11883.9
16	51	47886.0	208.7	2112.2	-1224.1	1830.1	-1805.2
	65	-41686.0	-208.7	-2112.2	1224.1	-8143.8	3209.9
17	51	51680.8	-513.6	1762.2	-1893.9	-1247.8	438.8
	65	-45480.8	513.6	-1762.2	1893.9	-4737.6	-1198.0
1	65	60955.1	-4111.8	-1429.0	-1183.3	6395.2	-26138.8
	75	-60565.1	4111.8	1429.0	1183.3	-6180.8	25522.0
2	65	55791.9	-6059.7	-1470.0	-2814.2	7366.5	-41838.0
	75	-55401.9	6059.7	1470.0	2814.2	-7146.0	40929.1
3	65	65282.4	-3906.9	-1630.5	-844.2	7277.3	-25408.4
	75	-64892.4	3906.9	1630.5	844.2	-7032.7	24822.3
4	65	54553.3	-660.4	316.1	1213.4	9380.3	-871.7
	75	-54163.3	660.4	-316.1	-1213.4	-9427.7	772.7
5	65	34108.8	-1256.4	-1911.3	45.8	4583.3	-6625.0
	75	-33808.8	1256.4	1911.3	-45.8	-4543.1	6438.9
6	65	33129.8	-2075.4	-1322.0	-1703.6	3384.2	-12251.5
	75	-32829.8	2075.4	1322.0	1703.6	-3342.2	11946.0
7	65	44175.2	-2779.9	-998.8	-784.2	4416.5	-17574.0
	75	-43875.2	2779.9	998.8	784.2	-4266.6	17157.0
8	65	40733.1	-4078.5	-1026.1	-1871.4	5064.0	-28040.2
	75	-40433.1	4078.5	1026.1	1871.4	-4910.1	27428.4
9	65	47060.1	-2643.3	-1133.1	-558.1	5004.5	-17087.0
	75	-46760.1	2643.3	1133.1	558.1	-4834.6	16690.6
10	65	39907.4	-479.0	164.7	813.6	6406.5	-729.3
	75	-39607.4	479.0	-164.7	-813.6	-6431.2	657.5
11	65	47102.3	-521.0	-969.3	922.2	3593.6	-1066.2
	75	-46802.3	521.0	969.3	-922.2	-3448.2	988.0
12	65	45950.3	-1189.7	-996.6	395.3	3966.2	-6335.0
	75	-45650.3	1189.7	996.6	-395.3	-3816.7	6156.6
13	65	35886.1	-514.8	-596.1	366.6	2086.1	-1430.8
	75	-35586.1	514.8	596.1	-366.6	-1996.6	1353.6
14	65	45785.1	-469.8	-758.4	932.3	4234.7	-872.8
	75	-45485.1	469.8	758.4	-932.3	-4121.0	802.4
15	65	37848.2	-4215.1	-891.8	-2097.4	4475.9	-28527.1
	75	-37548.2	4215.1	891.8	2097.4	-4342.2	27894.9
16	65	34174.1	-1323.9	-2029.7	27.5	5100.5	-7142.3

Comb.	Nodo	N [kg]	T1-2 [kg]	T1-3 [kg]	Mt [kgm]	M1-3 [kgm]	M1-2 [kgm]
	75	-33874.1	1323.9	2029.7	-27.5	-5052.0	6946.5
17	65	33125.9	-2216.6	-1391.4	-1871.7	3651.8	-13384.7
	75	-32825.9	2216.6	1391.4	1871.7	-3606.3	13059.0
1	75	60517.9	-4058.3	-1838.6	-1155.5	6209.5	-25516.4
	96	-57917.9	4058.3	1838.6	1155.5	-4371.0	21458.1
2	75	55355.7	-5971.4	-1891.7	-2769.9	7173.0	-40919.5
	96	-52755.7	5971.4	1891.7	2769.9	-5281.3	34948.0
3	75	64843.4	-3853.1	-2125.3	-815.8	7064.2	-24816.8
	96	-62243.4	3853.1	2125.3	815.8	-4938.9	20963.7
4	75	54103.4	-657.8	-1112.6	1218.5	9479.1	-773.1
	96	-51503.4	657.8	1112.6	-1218.5	-8366.5	115.4
5	75	33784.0	-1245.1	-1442.2	46.9	4568.9	-6438.4
	96	-31784.0	1245.1	1442.2	-46.9	1341.0	5208.6
6	75	32799.8	-2051.8	-1097.1	-1701.4	3366.0	-11945.0
	96	-30799.8	2051.8	1097.1	1701.4	-1202.6	9929.8
7	75	43839.4	-2744.2	-1283.7	-765.6	4288.0	-17153.2
	96	-41839.4	2744.2	1283.7	765.6	-3004.3	14409.1
8	75	40397.9	-4019.6	-1319.1	-1841.8	4930.3	-27422.0
	96	-38397.9	4019.6	1319.1	1841.8	-3611.2	23402.4
9	75	46723.0	-2607.4	-1474.8	-539.1	4857.8	-16686.9
	96	-44723.0	2607.4	1474.8	539.1	-3383.0	14079.5
10	75	39563.0	-477.2	-799.7	817.1	6467.7	-657.7
	96	-37563.0	477.2	799.7	-817.1	-5668.0	180.6
11	75	46765.0	-519.9	-1266.2	924.5	3472.0	-988.3
	96	-44765.0	519.9	1266.2	-924.5	-2205.8	468.4
12	75	45613.2	-1177.0	-1301.2	403.1	3840.1	-6155.5
	96	-43613.2	1177.0	1301.2	-403.1	-2538.9	4978.5
13	75	35551.7	-514.1	-760.0	367.8	2016.0	-1353.7
	96	-33551.7	514.1	760.0	-367.8	-1256.0	839.5
14	75	45446.2	-468.5	-1197.3	934.9	4147.5	-802.6
	96	-43446.2	468.5	1197.3	-934.9	-2950.2	334.1
15	75	37514.3	-4156.4	-1128.0	-2068.3	4360.5	-27888.4
	96	-35514.3	4156.4	1128.0	2068.3	-3232.6	23731.9
16	75	33849.5	-1312.6	-1525.0	28.7	5078.0	-6945.9
	96	-31849.5	1312.6	1525.0	-28.7	-4432.4	5650.7
17	75	32795.1	-2193.6	-1144.7	-1869.5	3630.2	-13057.9
	96	-30795.1	2193.6	1144.7	1869.5	-3036.6	10907.1
1	96	57848.6	-3954.5	-1807.4	-1090.4	4413.4	-21451.3
	118	-55248.6	3954.5	1807.4	1090.4	-2606.0	17496.7
2	96	52688.1	-5799.3	-1894.4	-2663.2	5321.8	-34936.2
	118	-50088.1	5799.3	1894.4	2663.2	-3427.4	29136.9
3	96	62170.2	-3749.0	-2120.3	-750.1	4986.0	-20957.0
	118	-59570.2	3749.0	2120.3	750.1	-2865.7	17208.0
4	96	51399.7	-655.5	-3235.8	1223.0	8450.7	-116.0
	118	-48799.7	655.5	3235.8	-1223.0	-5214.9	-539.5

Comb.	Nodo	N [kg]	T1-2 [kg]	T1-3 [kg]	Mt [kgm]	M1-3 [kgm]	M1-2 [kgm]
5	96	31757.9	-1222.7	145.9	48.0	-1331.8	-5208.4
	118	-29757.9	1222.7	-145.9	-48.0	-2576.7	4001.1
6	96	30758.0	-2004.9	-694.1	-1698.1	1230.9	-9929.1
	118	-28758.0	2004.9	694.1	1698.1	-1697.8	7959.0
7	96	41787.1	-2675.0	-1256.5	-722.1	3035.7	-14404.5
	118	-39787.1	2675.0	1256.5	722.1	-1779.2	11729.5
8	96	38346.8	-3904.8	-1314.4	-1770.6	3641.3	-23394.5
	118	-36346.8	3904.8	1314.4	1770.6	-2326.8	19489.7
9	96	44668.3	-2538.0	-1465.0	-495.3	3417.4	-14075.0
	118	-42668.3	2538.0	1465.0	495.3	-1952.4	11537.0
10	96	37487.9	-475.7	-2208.7	820.2	5727.2	-181.0
	118	-35487.9	475.7	2208.7	-820.2	-3518.5	-294.6
11	96	44710.1	-519.0	-1230.3	926.4	2240.3	-468.8
	118	-42710.1	519.0	1230.3	-926.4	-1010.0	-50.2
12	96	43558.6	-1153.3	-1275.7	419.0	2573.0	-4977.3
	118	-41558.6	1153.3	1275.7	-419.0	-1297.2	3824.0
13	96	33502.9	-513.7	-706.2	368.7	1283.2	-839.8
	118	-31502.9	513.7	706.2	-368.7	-577.0	326.1
14	96	43386.9	-467.4	-1454.6	937.1	2990.2	-334.6
	118	-41386.9	467.4	1454.6	-937.1	-1535.6	-132.9
15	96	35465.7	-4041.8	-1105.9	-1997.5	3259.5	-23724.0
	118	-33465.7	4041.8	1105.9	1997.5	-2153.7	19682.1
16	96	31824.4	-1289.9	233.6	29.7	4480.3	-5650.4
	118	-29824.4	1289.9	-233.6	-29.7	-2921.5	4377.7
17	96	30751.8	-2147.2	-698.3	-1866.1	3077.0	-10906.3
	118	-28751.8	2147.2	698.3	1866.1	-1877.9	8798.7
1	118	55179.7	-3836.1	-1469.9	-1001.7	2648.8	-17490.2
	139	-52579.7	3836.1	1469.9	1001.7	-1178.8	13654.1
2	118	50020.2	-5602.1	-1698.5	-2516.0	3469.1	-29125.4
	139	-47420.2	5602.1	1698.5	2516.0	-1770.7	23523.4
3	118	59497.7	-3630.2	-1696.9	-660.7	2913.1	-17201.5
	139	-56897.7	3630.2	1696.9	660.7	-1216.2	13571.3
4	118	48694.7	-653.9	-3573.5	1226.6	5302.0	538.8
	139	-46094.7	653.9	3573.5	-1226.6	-1728.5	-1192.7
5	118	29732.7	-1196.6	736.0	48.5	2622.1	-4001.0
	139	-27732.7	1196.6	-736.0	-48.5	-1373.3	2820.9
6	118	28716.2	-1950.0	-559.7	-1694.6	1736.0	-7958.5
	139	-26716.2	1950.0	559.7	1694.6	-833.8	6043.4
7	118	39735.3	-2596.0	-1012.2	-662.9	1810.8	-11725.2
	139	-37735.3	2596.0	1012.2	662.9	-798.5	9129.2
8	118	36295.6	-3773.3	-1164.6	-1672.5	2357.7	-19482.0
	139	-34295.6	3773.3	1164.6	1672.5	-1193.1	15708.7
9	118	42613.9	-2458.8	-1163.5	-435.6	1987.0	-11532.8
	139	-40613.9	2458.8	1163.5	435.6	-823.4	9074.0
10	118	35411.9	-474.5	-2414.6	822.6	3579.6	294.1
	139	-33411.9	474.5	2414.6	-822.6	-1165.0	-768.7

Comb.	Nodo	N [kg]	T1-2 [kg]	T1-3 [kg]	Mt [kgm]	M1-3 [kgm]	M1-2 [kgm]
11	118	42656.3	-518.6	-834.6	927.6	1043.8	49.6
	139	-40656.3	518.6	834.6	-927.6	-209.2	-568.2
12	118	41505.0	-1126.6	-921.9	439.6	1330.9	-3822.9
	139	-39505.0	1126.6	921.9	-439.6	-409.0	2696.3
13	118	31454.9	-513.6	-463.1	369.1	603.7	-326.4
	139	-29454.9	513.6	463.1	-369.1	-140.6	-187.2
14	118	41328.3	-466.8	-1171.9	938.6	1575.3	132.3
	139	-39328.3	466.8	1171.9	-938.6	-403.4	-599.1
15	118	33416.9	-3910.6	-1013.3	-1899.8	2181.5	-19674.5
	139	-31416.9	3910.6	1013.3	1899.8	-1168.2	15763.9
16	118	29800.2	-1263.1	850.1	30.3	2968.0	-4377.5
	139	-27800.2	1263.1	-850.1	-30.3	-1610.0	3132.6
17	118	28708.4	-2091.9	-570.5	-1862.2	1916.9	-8798.2
	139	-26708.4	2091.9	570.5	1862.2	-956.2	6745.0
1	139	52526.4	-3747.2	-1295.4	-909.7	1215.7	-13649.0
	181	-43575.8	3452.3	1295.4	909.7	3188.6	1409.8
2	139	47367.4	-5453.5	-1759.8	-2362.4	1807.0	-23514.2
	181	-38416.8	4961.9	1759.8	2362.4	4176.2	5808.0
3	139	56840.6	-3541.0	-1407.6	-568.0	1257.8	-13566.3
	181	-47889.9	3246.1	1407.6	568.0	3528.0	2028.3
4	139	46005.0	-652.8	-3319.1	1229.0	1810.4	1191.9
	181	-37054.3	652.8	3319.1	-1229.0	9474.5	-3411.5
5	139	27722.3	-1131.9	840.9	48.4	1394.4	-2820.9
	181	-20837.2	1131.9	-840.9	-48.4	-2783.3	-918.2
6	139	26692.6	-1814.4	-435.8	-1691.2	851.7	-6043.0
	181	-19807.5	1814.4	435.8	1691.2	1403.5	71.3
7	139	37695.4	-2536.8	-883.2	-601.7	825.4	-9125.8
	181	-30810.3	2340.2	883.2	601.7	2177.6	834.9
8	139	34256.1	-3674.3	-1192.8	-1570.1	1219.6	-15702.6
	181	-27371.0	3346.6	1192.8	1570.1	2836.0	3767.1
9	139	40571.5	-2399.3	-958.0	-373.9	853.5	-9070.7
	181	-33686.4	2202.7	958.0	373.9	2403.9	1247.2
10	139	33347.8	-473.9	-2232.4	824.1	1221.9	768.2
	181	-26462.7	473.9	2232.4	-824.1	6368.3	-2379.3
11	139	40614.8	-518.7	-443.1	927.8	238.1	567.6
	181	-33729.6	518.7	443.1	-927.8	1268.5	-2331.1
12	139	39463.5	-1106.8	-603.5	460.4	437.8	-2695.6
	181	-32578.4	1041.3	603.5	-460.4	1614.2	-956.1
13	139	29419.4	-513.9	-258.3	368.8	162.0	186.8
	181	-22534.2	513.9	258.3	-368.8	716.1	-1934.1
14	139	39281.8	-466.7	-811.4	939.2	438.3	598.5
	181	-32396.7	466.7	811.4	-939.2	2320.6	-2185.4
15	139	31380.0	-3811.8	-1118.0	-1797.9	1191.6	-15757.7
	181	-24494.9	3484.1	1118.0	1797.9	2609.8	3354.7
16	139	27790.5	-1195.7	952.9	30.2	1632.4	-3132.5
	181	-20905.3	1195.7	-952.9	-30.2	-3067.0	-814.9

Comb.	Nodo	N [kg]	T1-2 [kg]	T1-3 [kg]	Mt [kgm]	M1-3 [kgm]	M1-2 [kgm]
17	139	26682.2	-1953.3	-451.1	-1858.5	974.7	-6744.6
	181	-19797.1	1953.3	451.1	1858.5	1471.3	312.1
1	181	32383.8	-3430.5	1872.3	-2760.3	-3188.6	-8584.3
	207	-22222.2	3095.7	-1872.3	2760.3	-4038.6	-4011.1
2	181	29474.8	-4942.6	1782.2	-4426.9	-4176.2	-11522.1
	207	-19313.2	4384.6	-1782.2	4426.9	-2703.3	-6479.3
3	181	38947.9	-3219.4	2521.2	-2873.9	-3528.0	-7740.4
	207	-28786.3	2884.5	-2521.2	2873.9	-6203.8	-4040.1
4	181	28112.4	-657.7	608.7	-1021.1	-9474.5	-2297.6
	207	-17950.8	657.7	-608.7	1021.1	7124.9	-240.9
5	181	15011.5	-813.6	817.3	-143.8	2783.3	-2791.7
	207	-7194.8	813.6	-817.3	143.8	-5498.8	-438.9
6	181	14000.7	-1132.4	505.5	-2002.5	-1403.5	-3770.4
	207	-6184.1	1132.4	-505.5	2002.5	664.7	-748.5
7	181	22970.4	-2325.1	1217.4	-1826.1	-2177.6	-5853.5
	207	-15153.7	2101.9	-1217.4	1826.1	-2521.7	-2690.6
8	181	21031.0	-3333.2	1157.4	-2937.2	-2836.0	-7812.0
	207	-13214.4	2961.1	-1157.4	2937.2	-1631.5	-4336.0
9	181	27346.4	-2184.3	1650.0	-1901.9	-2403.9	-5290.9
	207	-19529.8	1961.1	-1650.0	1901.9	-3965.1	-2709.9
10	181	20122.7	-476.5	375.0	-666.7	-6368.3	-1662.4
	207	-12306.1	476.5	-375.0	666.7	4920.7	-177.1
11	181	27389.7	-500.5	1455.7	-186.6	-1268.5	-1710.6
	207	-19573.0	500.5	-1455.7	186.6	-4350.6	-221.3
12	181	26738.4	-1023.6	1457.3	-747.6	-1614.2	-2761.3
	207	-18921.8	949.2	-1457.3	747.6	-4011.0	-1046.3
13	181	16694.3	-504.3	397.1	-2.8	-716.1	-1782.6
	207	-8877.7	504.3	-397.1	2.8	-816.8	-164.0
14	181	26556.8	-452.3	1300.8	-293.5	-2320.6	-1531.3
	207	-18740.1	452.3	-1300.8	293.5	-2700.6	-214.5
15	181	16654.9	-3473.9	724.8	-2861.5	-2609.8	-8374.6
	207	-8838.3	3101.9	-724.8	2861.5	-188.0	-4316.7
16	181	15079.0	-846.1	890.3	-161.6	3067.0	-2893.7
	207	-7262.3	846.1	-890.3	161.6	-6010.3	-472.1
17	181	13987.2	-1207.3	541.3	-2183.3	-1471.3	-4007.6
	207	-6170.6	1207.3	-541.3	2183.3	702.2	-811.3
1	20	114213.4	-1936.0	311.9	-153.4	-975.1	-26419.4
	69	-82883.4	1936.0	-311.9	153.4	-2783.9	3090.4
2	20	114607.4	-3390.4	268.1	-138.6	-724.2	-43596.3
	69	-83277.4	3390.4	-268.1	138.6	-2506.2	2742.3
3	20	116883.2	-1938.1	391.5	-153.5	-1338.1	-26518.4
	69	-85553.2	1938.1	-391.5	153.5	-3379.3	3164.6
4	20	108169.8	632.7	-3528.2	921.4	26628.7	2566.0
	69	-76839.8	-632.7	3528.2	-921.4	15886.2	5058.3
5	20	70284.1	-743.7	2076.7	-1349.9	-14700.8	-9037.0

Comb.	Nodo	N [kg]	T1-2 [kg]	T1-3 [kg]	Mt [kgm]	M1-3 [kgm]	M1-2 [kgm]
	69	-46184.1	743.7	-2076.7	1349.9	-10344.9	-442.0
6	20	75464.0	-1576.5	-37.4	-1865.9	717.2	-17047.2
	69	-51364.0	1576.5	37.4	1865.9	-269.8	-3430.7
7	20	84969.2	-1267.9	213.1	-116.5	-665.9	-17628.6
	69	-60869.2	1267.9	-213.1	116.5	-1902.1	2350.0
8	20	85231.8	-2237.5	183.9	-106.6	-498.7	-29079.9
	69	-61131.8	2237.5	-183.9	106.6	-1716.9	2118.0
9	20	86749.0	-1269.3	266.1	-116.6	-907.9	-17694.7
	69	-62649.0	1269.3	-266.1	116.6	-2299.0	2399.5
10	20	80940.1	444.6	-2347.0	600.0	17736.6	1694.9
	69	-56840.1	-444.6	2347.0	-600.0	10544.7	3662.0
11	20	82088.2	180.6	267.5	-125.2	-1016.0	-448.9
	69	-57988.2	-180.6	-267.5	125.2	-2207.2	2625.3
12	20	82693.6	-303.7	257.6	-120.9	-948.2	-6182.2
	69	-58593.6	303.7	-257.6	120.9	-2155.7	2522.9
13	20	73740.9	177.1	127.8	-116.9	-444.6	-254.5
	69	-49640.9	-177.1	-127.8	116.9	-1095.8	2388.6
14	20	81835.2	232.7	-248.6	20.4	2698.8	-27.2
	69	-57735.2	-232.7	248.6	-20.4	296.6	2831.7
15	20	83452.0	-2236.1	130.8	-106.6	-256.7	-29013.9
	69	-59352.0	2236.1	-130.8	106.6	-1320.0	2068.5
16	20	70146.9	-830.3	2239.0	-1449.4	-15865.4	-9783.2
	69	-46046.9	830.3	-2239.0	1449.4	-11143.4	-830.3
17	20	75746.4	-1759.5	-47.6	-2008.0	799.8	-18526.0
	69	-51646.4	1759.5	47.6	2008.0	-230.9	-4434.5
1	69	46726.3	-3033.8	770.3	1903.1	-4849.3	-16088.5
	79	-46336.3	3033.8	-770.3	-1903.1	4733.8	15633.4
2	69	45260.8	-5004.5	548.0	2980.6	-4061.8	-27092.9
	79	-44870.8	5004.5	-548.0	-2980.6	3979.6	26342.2
3	69	50650.0	-2988.3	1048.0	2006.6	-6049.8	-15612.2
	79	-50260.0	2988.3	-1048.0	-2006.6	5892.6	15164.0
4	69	47422.0	-37.6	1392.8	327.4	4638.0	856.7
	79	-47032.0	37.6	-1392.8	-327.4	-4846.9	-862.4
5	69	27325.9	-801.7	13.6	-158.2	-9345.7	-4441.6
	79	-27025.9	801.7	-13.6	158.2	9276.9	4324.8
6	69	29092.3	-1520.3	429.9	-1498.2	-6941.7	-9281.3
	79	-28792.3	1520.3	-429.9	1498.2	6860.8	9063.3
7	69	34677.9	-2034.5	533.2	1259.0	-3392.3	-10732.2
	79	-34377.9	2034.5	-533.2	-1259.0	3312.3	10427.0
8	69	33700.9	-3348.3	385.0	1977.3	-2867.2	-18068.4
	79	-33400.9	3348.3	-385.0	-1977.3	2809.5	17566.2
9	69	37293.6	-2004.1	718.3	1328.0	-4192.5	-10414.7
	79	-36993.6	2004.1	-718.3	-1328.0	4084.8	10114.0
10	69	35141.6	-37.0	948.2	208.5	2932.6	564.7
	79	-34841.6	37.0	-948.2	-208.5	-3074.8	-570.2
11	69	36939.8	-32.3	831.9	202.7	-4418.4	588.8

Comb.	Nodo	N [kg]	T1-2 [kg]	T1-3 [kg]	Mt [kgm]	M1-3 [kgm]	M1-2 [kgm]
	79	-36639.8	32.3	-831.9	-202.7	4293.6	-593.6
12	69	36653.5	-689.3	769.9	567.2	-4218.3	-3079.2
	79	-36353.5	689.3	-769.9	-567.2	4102.8	2975.8
13	69	30409.7	-79.4	395.5	30.7	-2414.1	79.7
	79	-30109.7	79.4	-395.5	-30.7	2354.7	-91.6
14	69	36941.6	-27.1	882.5	213.4	-3058.4	647.4
	79	-36641.6	27.1	-882.5	-213.4	2926.0	-651.5
15	69	31085.1	-3378.7	199.9	1908.3	-2066.9	-18385.9
	79	-30785.1	3378.7	-199.9	-1908.3	2037.0	17879.1
16	69	27196.7	-863.8	-49.5	-169.9	-10091.9	-4907.4
	79	-26896.7	863.8	49.5	169.9	10015.8	4782.0
17	69	29107.5	-1649.9	430.8	-1622.3	-7399.2	-10388.5
	79	-28807.5	1649.9	-430.8	1622.3	7313.6	10153.1
1	79	46243.8	-2926.9	1311.1	1907.1	-4748.0	-15627.3
	100	-43643.8	2926.9	-1311.1	-1907.1	3436.9	12700.4
2	79	44779.1	-4827.3	1070.8	2988.7	-3991.5	-26331.7
	100	-42179.1	4827.3	-1070.8	-2988.7	2920.7	21504.4
3	79	50165.3	-2881.3	1683.0	2010.2	-5910.2	-15158.0
	100	-47565.3	2881.3	-1683.0	-2010.2	4227.2	12276.7
4	79	46935.4	-37.3	-23.8	335.9	4883.8	861.8
	100	-44335.4	37.3	23.8	-335.9	-4860.0	-899.1
5	79	26962.1	-783.3	1841.8	-158.1	-9314.2	-4324.7
	100	-24962.1	783.3	-1841.8	158.1	7476.9	3564.0
6	79	28723.7	-1489.6	1465.3	-1496.6	-6886.5	-9062.8
	100	-26723.7	1489.6	-1465.3	1496.6	5425.9	7637.4
7	79	34307.5	-1963.2	910.0	1261.5	-3322.2	-10422.9
	100	-32307.5	1963.2	-910.0	-1261.5	2412.2	8459.8
8	79	33331.0	-3230.1	749.8	1982.6	-2817.8	-17559.2
	100	-31331.0	3230.1	-749.8	-1982.6	2068.1	14329.1
9	79	36921.8	-1932.8	1157.9	1330.2	-4097.0	-10110.1
	100	-34921.8	1932.8	-1157.9	-1330.2	2939.1	8177.3
10	79	34768.5	-36.8	20.0	214.1	3099.0	569.8
	100	-32768.5	36.8	-20.0	-214.1	-3119.1	-606.6
11	79	36568.3	-31.4	1235.4	201.0	-4306.4	593.3
	100	-34568.3	31.4	-1235.4	-201.0	3071.0	-624.7
12	79	36282.1	-664.9	1173.4	566.8	-4115.0	-2974.7
	100	-34282.1	664.9	-1173.4	-566.8	2941.6	2309.8
13	79	30041.9	-78.7	628.8	29.7	-2361.5	91.3
	100	-28041.9	78.7	-628.8	-29.7	1732.7	-170.0
14	79	36569.6	-26.3	1027.4	213.1	-2931.6	651.1
	100	-34569.6	26.3	-1027.4	-213.1	1904.2	-677.4
15	79	30716.7	-3260.5	501.8	1913.9	-2043.0	-17872.1
	100	-28716.7	3260.5	-501.8	-1913.9	1541.2	14611.6
16	79	26833.2	-844.9	1972.0	-169.7	-10055.2	-4781.8
	100	-24833.2	844.9	-1972.0	169.7	8088.0	3963.9
17	79	28739.0	-1619.8	1552.1	-1620.6	-7340.7	-10152.5

Comb.	Nodo	N [kg]	T1-2 [kg]	T1-3 [kg]	Mt [kgm]	M1-3 [kgm]	M1-2 [kgm]
	100	-26739.0	1619.8	-1552.1	1620.6	5794.0	8609.2
1	100	43510.2	-2720.8	1478.7	1909.9	-3464.8	-12690.8
	122	-40910.2	2720.8	-1478.7	-1909.9	1986.1	9970.0
2	100	42046.9	-4484.2	1272.1	2994.0	-2944.2	-21488.1
	122	-39446.9	4484.2	-1272.1	-2994.0	1672.1	17004.0
3	100	47427.6	-2675.3	1835.7	2012.9	-4261.6	-12267.2
	122	-44827.6	2675.3	-1835.7	-2012.9	2425.9	9591.9
4	100	44199.4	-37.9	-2260.7	344.2	4927.8	898.5
	122	-41599.4	37.9	2260.7	-344.2	-2667.1	-936.4
5	100	24870.3	-748.6	3353.0	-157.6	-7549.1	-3563.9
	122	-22870.3	748.6	-3353.0	157.6	4294.1	2837.9
6	100	26626.5	-1430.0	2404.2	-1494.2	-5476.0	-7637.1
	122	-24626.5	1430.0	-2404.2	1494.2	3109.0	6268.2
7	100	32206.1	-1825.8	1029.1	1263.3	-2431.7	-8453.4
	122	-30206.1	1825.8	-1029.1	-1263.3	1402.6	6627.7
8	100	31230.6	-3001.3	891.4	1986.1	-2084.7	-14318.3
	122	-29230.6	3001.3	-891.4	-1986.1	1193.3	11317.0
9	100	34817.8	-1795.4	1267.1	1332.0	-2962.9	-8171.0
	122	-32817.8	1795.4	-1267.1	-1332.0	1695.8	6375.6
10	100	32665.6	-37.1	-1463.8	219.6	3163.4	606.1
	122	-30665.6	37.1	1463.8	-219.6	-1699.5	-643.2
11	100	34464.9	-31.1	1300.7	200.4	-3095.8	624.3
	122	-32464.9	31.1	-1300.7	-200.4	1795.2	-655.3
12	100	34178.9	-619.0	1251.0	567.0	-2965.4	-2308.0
	122	-32178.9	619.0	-1251.0	-567.0	1714.3	1689.0
13	100	27945.5	-78.4	696.9	29.3	-1746.3	169.7
	122	-25945.5	78.4	-696.9	-29.3	1049.5	-248.1
14	100	34465.9	-26.1	780.0	213.7	-1915.8	676.9
	122	-32465.9	26.1	-780.0	-213.7	1135.8	-703.1
15	100	28619.0	-3031.6	653.4	1917.4	-1553.5	-14600.7
	122	-26619.0	3031.6	-653.4	-1917.4	900.1	11569.1
16	100	24741.7	-809.0	3593.5	-169.1	-8164.7	-3963.8
	122	-22741.7	809.0	-3593.5	169.1	4694.6	3180.9
17	100	26641.6	-1561.1	2559.2	-1617.9	-5847.1	-8608.9
	122	-24641.6	1561.1	-2559.2	1617.9	3334.9	7119.0
1	122	40779.5	-2482.9	954.6	1913.9	-2016.7	-9960.0
	143	-38179.5	2482.9	-954.6	-1913.9	1062.0	7477.0
2	122	39317.6	-4087.3	872.0	3000.0	-1697.9	-16986.9
	143	-36717.6	4087.3	-872.0	-3000.0	825.9	12899.6
3	122	44693.3	-2437.6	1164.9	2017.2	-2463.5	-9582.0
	143	-42093.3	2437.6	-1164.9	-2017.2	1298.7	7144.4
4	122	41469.3	-39.3	-2566.3	352.8	2738.5	935.7
	143	-38869.3	39.3	2566.3	-352.8	-172.1	-975.1
5	122	22778.3	-709.5	2822.0	-156.5	-4369.1	-2837.9
	143	-20778.3	709.5	-2822.0	156.5	-560.8	2151.8

Comb.	Nodo	N [kg]	T1-2 [kg]	T1-3 [kg]	Mt [kgm]	M1-3 [kgm]	M1-2 [kgm]
6	122	24530.9	-1361.4	1982.8	-1490.7	-3162.4	-6268.1
	143	-22530.9	1361.4	-1982.8	1490.7	583.9	4966.8
7	122	30106.9	-1667.1	662.1	1266.1	-1423.9	-6621.0
	143	-28106.9	1667.1	-662.1	-1266.1	761.9	4953.9
8	122	29132.3	-2736.8	607.0	1990.1	-1211.4	-11305.6
	143	-27132.3	2736.8	-607.0	-1990.1	604.5	8568.9
9	122	32716.1	-1636.9	802.2	1334.9	-1721.8	-6369.0
	143	-30716.1	1636.9	-802.2	-1334.9	919.6	4732.1
10	122	30566.8	-38.1	-1685.3	225.3	1746.2	642.8
	143	-28566.8	38.1	1685.3	-225.3	-60.9	-680.9
11	122	32363.8	-31.5	778.8	201.1	-1822.4	654.9
	143	-30363.8	31.5	-778.8	-201.1	1043.6	-686.4
12	122	32078.1	-566.4	763.1	568.5	-1740.4	-1687.1
	143	-30078.1	566.4	-763.1	-568.5	977.3	1120.7
13	122	25850.8	-78.5	418.0	29.6	-1064.5	247.8
	143	-23850.8	78.5	-418.0	-29.6	646.5	-326.4
14	122	32365.0	-26.7	304.6	215.5	-1148.9	702.6
	143	-30365.0	26.7	-304.6	-215.5	844.2	-729.3
15	122	26523.1	-2767.0	466.8	1921.3	-913.5	-11557.6
	143	-24523.1	2767.0	-466.8	-1921.3	446.7	8790.6
16	122	22649.9	-768.4	3040.5	-167.9	-4773.9	-3180.9
	143	-20649.9	768.4	-3040.5	167.9	-779.8	2439.0
17	122	24546.0	-1492.8	2122.5	-1614.1	-3391.4	-7118.9
	143	-22546.0	1492.8	-2122.5	1614.1	561.4	5694.5
1	143	38081.3	-2301.1	323.9	1920.0	-1095.2	-7468.8
	182	-29020.2	1711.6	-323.9	-1920.0	-6.1	647.2
2	143	36620.9	-3783.4	438.3	3008.0	-853.6	-12885.5
	182	-27559.7	2801.0	-438.3	-3008.0	-636.7	1692.1
3	143	41991.6	-2256.0	373.1	2023.9	-1339.6	-7136.3
	182	-32930.4	1666.6	-373.1	-2023.9	71.2	467.8
4	143	38772.1	-41.7	-2431.8	362.1	243.8	974.5
	182	-29710.9	41.7	2431.8	-362.1	8024.4	-1116.3
5	143	20712.3	-617.7	1628.0	-154.7	575.2	-2151.9
	182	-13742.2	617.7	-1628.0	154.7	-4060.9	-797.3
6	143	22458.1	-1199.2	1134.4	-1485.9	-609.4	-4966.9
	182	-15488.0	1199.2	-1134.4	1485.9	-2685.3	-2112.8
7	143	28032.7	-1546.0	213.0	1270.2	-785.1	-4948.4
	182	-21062.6	1153.0	-213.0	-1270.2	61.0	360.1
8	143	27059.1	-2534.2	289.2	1995.6	-624.0	-8559.5
	182	-20089.0	1879.3	-289.2	-1995.6	-359.4	1056.7
9	143	30639.6	-1516.0	245.7	1339.5	-948.0	-4726.7
	182	-23669.5	1123.0	-245.7	-1339.5	112.5	240.5
10	143	28493.3	-39.7	-1624.2	231.6	107.6	680.4
	182	-21523.1	39.7	1624.2	-231.6	5414.7	-815.6
11	143	30287.8	-32.6	108.7	203.5	-1073.5	686.0
	182	-23317.7	32.6	-108.7	-203.5	704.1	-796.8

Comb.	Nodo	N [kg]	T1-2 [kg]	T1-3 [kg]	Mt [kgm]	M1-3 [kgm]	M1-2 [kgm]
12	143	30002.4	-526.8	149.3	571.5	-1005.9	-1119.1
	182	-23032.3	395.8	-149.3	-571.5	498.2	-449.4
13	143	23781.2	-79.3	27.0	30.9	-663.1	326.1
	182	-16811.1	79.3	-27.0	-30.9	571.3	-595.6
14	143	30289.2	-27.9	-233.4	218.7	-859.5	728.8
	182	-23319.1	27.9	233.4	-218.7	1653.0	-823.8
15	143	24452.3	-2564.2	256.5	1926.3	-461.1	-8781.2
	182	-17482.2	1909.3	-256.5	-1926.3	-410.9	1176.3
16	143	20584.3	-673.0	1784.0	-166.1	795.9	-2439.2
	182	-13614.2	673.0	-1784.0	166.1	-4443.5	-862.7
17	143	22473.1	-1330.2	1234.8	-1609.1	-587.5	-5694.6
	182	-15503.0	1330.2	-1234.8	1609.1	-2953.6	-2400.4
1	182	26756.8	-1707.5	1933.8	1098.2	6.1	-2016.3
	211	-16469.7	1038.4	-1933.8	-1098.2	-7470.5	-3283.2
2	182	25296.4	-2788.4	1368.8	2710.0	636.7	-3061.7
	211	-15009.3	1673.1	-1368.8	-2710.0	-5920.3	-5549.1
3	182	30667.1	-1665.8	2407.7	944.7	-71.2	-1836.7
	211	-20380.0	996.6	-2407.7	-944.7	-9222.7	-3301.7
4	182	27447.6	-36.0	865.3	-1617.3	-8024.4	-252.0
	211	-17160.5	36.0	-865.3	1617.3	4684.3	113.2
5	182	12006.2	-334.9	1924.6	165.8	4060.9	-255.8
	211	-4093.0	334.9	-1924.6	-165.8	-12132.2	100.7
6	182	13742.8	-645.6	987.7	1065.1	2685.3	1054.1
	211	-5829.6	645.6	-987.7	-1065.1	-8865.5	-440.5
7	182	19321.6	-1150.2	1384.0	661.2	-61.0	-1413.1
	211	-11408.5	704.1	-1384.0	-661.2	-5281.1	-2165.8
8	182	18348.0	-1870.8	1007.3	1735.8	359.4	-2110.0
	211	-10434.8	1127.3	-1007.3	-1735.8	-4247.6	-3676.4
9	182	21928.4	-1122.4	1699.9	558.9	-112.5	-1293.4
	211	-14015.3	676.3	-1699.9	-558.9	-6449.2	-2178.1
10	182	19782.1	-35.9	671.6	-1149.1	-5414.7	-236.9
	211	-11869.0	35.9	-671.6	1149.1	2822.2	98.5
11	182	21576.7	-39.5	2027.8	-971.6	-704.1	-255.5
	211	-13663.5	39.5	-2027.8	971.6	-7123.1	103.2
12	182	21291.2	-400.0	1865.8	-443.3	-498.2	-603.1
	211	-13378.1	251.3	-1865.8	443.3	-6703.8	-653.8
13	182	15070.0	-81.3	1216.6	-702.9	-571.3	-456.7
	211	-7156.9	81.3	-1216.6	702.9	-4124.7	142.8
14	182	21578.0	-33.0	1798.7	-1020.3	-1653.0	-228.5
	211	-13664.9	33.0	-1798.7	1020.3	-5289.8	101.1
15	182	15741.1	-1898.7	691.3	1838.1	410.9	-2229.8
	211	-7828.0	1155.1	-691.3	-1838.1	-3079.4	-3664.1
16	182	11879.0	0.7	2241.7	236.1	4443.5	-190.8
	211	-3965.9	-0.7	-2241.7	-236.1	-12915.8	95.0
17	182	13758.0	494.6	1734.4	1212.8	2953.6	1340.5
	211	-5844.9	-494.6	-1734.4	-1212.8	-9339.2	-495.2

Comb.	Nodo	N [kg]	T1-2 [kg]	T1-3 [kg]	Mt [kgm]	M1-3 [kgm]	M1-2 [kgm]
1	21	81355.5	-2341.0	24.8	776.1	167.8	-28087.3
	71	-50025.5	2341.0	-24.8	-776.1	-466.6	-121.7
2	21	82488.8	-3960.5	15.3	1358.4	271.7	-45927.2
	71	-51158.8	3960.5	-15.3	-1358.4	-456.4	-1797.4
3	21	82204.1	-2355.4	47.6	791.3	31.9	-28198.9
	71	-50874.1	2355.4	-47.6	-791.3	-605.7	-183.2
4	21	64374.2	465.8	-3328.3	840.9	25825.7	2603.6
	71	-33044.2	-465.8	3328.3	-840.9	14280.6	3009.8
5	21	62184.9	-1032.0	1719.1	-404.8	-13258.2	-11555.6
	71	-38084.9	1032.0	-1719.1	404.8	-7498.1	-1342.7
6	21	58648.9	-2070.9	-140.4	812.0	1132.1	-21240.5
	71	-34548.9	2070.9	140.4	-812.0	553.9	-4917.2
7	21	61244.6	-1550.0	11.3	504.1	137.8	-18801.8
	71	-37144.6	1550.0	-11.3	-504.1	-274.3	124.5
8	21	62000.1	-2629.7	5.0	892.3	207.0	-30695.1
	71	-37900.1	2629.7	-5.0	-892.3	-267.5	-992.6
9	21	61810.3	-1559.6	26.5	514.3	47.2	-18876.2
	71	-37710.3	1559.6	-26.5	-514.3	-367.0	83.6
10	21	49923.7	321.2	-2224.1	547.3	17243.0	1658.7
	71	-25823.7	-321.2	2224.1	-547.3	9557.1	2212.2
11	21	58880.0	60.2	24.6	-70.9	-38.8	-956.5
	71	-34780.0	-60.2	-24.6	70.9	-257.1	1682.5
12	21	59457.4	-479.6	22.7	123.5	-6.1	-6912.0
	71	-35357.4	479.6	-22.7	-123.5	-267.1	1132.5
13	21	55658.6	75.9	-14.6	-91.0	129.3	-734.6
	71	-31558.6	-75.9	14.6	91.0	46.1	1649.1
14	21	57042.2	110.6	-423.1	54.5	3401.1	-441.2
	71	-32942.2	-110.6	423.1	-54.5	1697.9	1773.4
15	21	61434.3	-2620.1	-10.2	882.1	297.6	-30620.7
	71	-37334.3	2620.1	10.2	-882.1	-174.8	-951.6
16	21	62779.1	-1133.0	1863.2	-428.9	-14347.9	-12463.0
	71	-38679.1	1133.0	-1863.2	428.9	-8159.6	-1756.2
17	21	58952.6	-2278.8	-149.0	886.9	1208.7	-22998.7
	71	-34852.6	2278.8	149.0	-886.9	578.9	-5928.2
1	71	34478.5	-3029.0	-539.7	243.5	432.2	-15723.8
	81	-34088.5	3029.0	539.7	-243.5	-351.2	15269.4
2	71	34128.0	-4891.9	-533.3	700.0	553.9	-25017.4
	81	-33738.0	4891.9	533.3	-700.0	-473.9	24283.6
3	71	36239.0	-3040.5	-647.1	246.4	370.8	-15540.3
	81	-35849.0	3040.5	647.1	-246.4	-273.7	15084.3
4	71	29851.4	-0.8	1212.5	168.8	2186.1	-774.6
	81	-29461.4	0.8	-1212.5	-168.8	-2368.0	774.5
5	71	25326.0	-172.2	-866.0	-326.6	2659.5	-5833.6
	81	-25026.0	172.2	866.0	326.6	-2659.4	5670.7
6	71	24252.6	-1803.8	-211.2	-1704.8	-260.4	-10618.0

Comb.	Nodo	N [kg]	T1-2 [kg]	T1-3 [kg]	Mt [kgm]	M1-3 [kgm]	M1-2 [kgm]
	81	-23952.6	1803.8	211.2	1704.8	271.2	10321.6
7	71	25925.5	-2027.4	-366.7	120.1	307.6	-10618.8
	81	-25625.5	2027.4	366.7	-120.1	-252.6	10314.7
8	71	25691.9	-3269.4	-362.4	424.4	388.8	-16814.6
	81	-25391.9	3269.4	362.4	-424.4	-334.4	16324.2
9	71	27099.2	-2035.1	-438.3	122.1	266.7	-10496.5
	81	-26799.2	2035.1	438.3	-122.1	-200.9	10191.3
10	71	22840.8	-8.7	801.4	70.3	1476.9	-652.7
	81	-22540.8	8.7	-801.4	-70.3	-1597.1	651.4
11	71	26664.6	-147.4	-380.6	-328.9	124.2	-1093.6
	81	-26364.6	147.4	380.6	328.9	-67.2	1071.4
12	71	26635.0	-771.2	-385.5	-177.3	167.1	-4203.6
	81	-26335.0	771.2	385.5	177.3	-109.3	4087.9
13	71	23774.8	-103.4	-183.3	-324.8	163.0	-1148.3
	81	-23474.8	103.4	183.3	324.8	-135.6	1132.8
14	71	26064.8	-119.0	-152.8	-248.1	384.8	-971.2
	81	-25764.8	119.0	152.8	248.1	-361.8	953.4
15	71	24518.2	-3261.8	-290.9	422.5	429.7	-16936.9
	81	-24218.2	3261.8	290.9	-422.5	-386.1	16447.6
16	71	25532.3	-181.4	-937.4	-326.5	3124.4	-6326.2
	81	-25232.3	181.4	937.4	326.5	-3115.3	6151.3
17	71	24357.0	-1955.8	-218.6	-1818.4	-232.4	-11719.9
	81	-24057.0	1955.8	218.6	1818.4	245.1	11400.9
1	81	34050.6	-2976.7	-569.2	223.0	336.1	-15267.2
	102	-31450.6	2976.7	569.2	-223.0	233.1	12290.5
2	81	33700.4	-4805.6	-537.1	667.1	459.3	-24279.9
	102	-31100.4	4805.6	537.1	-667.1	77.8	19474.3
3	81	35810.9	-2988.1	-662.9	225.7	258.2	-15082.0
	102	-33210.9	2988.1	662.9	-225.7	404.7	12093.9
4	81	29441.7	-1.9	114.7	172.0	2382.3	-774.1
	102	-26841.7	1.9	-114.7	-172.0	-2497.0	772.1
5	81	24982.5	-172.8	-536.4	-325.4	2656.7	-5670.9
	102	-22982.5	172.8	536.4	325.4	3089.7	4612.3
6	81	23915.5	-1772.1	-103.5	-1702.6	-285.4	-10321.8
	102	-21915.5	1772.1	103.5	1702.6	1966.4	8396.2
7	81	25596.5	-1992.5	-397.3	106.3	241.0	-10313.2
	102	-23596.5	1992.5	397.3	-106.3	156.3	8320.7
8	81	25363.0	-3211.8	-375.9	402.4	323.2	-16321.7
	102	-23363.0	3211.8	375.9	-402.4	52.7	13109.9
9	81	26770.0	-2000.1	-459.8	108.1	189.1	-10189.7
	102	-24770.0	2000.1	459.8	-108.1	270.7	8189.6
10	81	22523.8	-9.3	58.6	72.3	1605.2	-651.1
	102	-20523.8	9.3	-58.6	-72.3	-1663.8	641.8
11	81	26335.2	-146.6	-432.0	-330.3	55.0	-1071.4
	102	-24335.2	146.6	432.0	330.3	377.0	924.8
12	81	26305.7	-758.9	-427.9	-182.9	97.3	-4087.3

Comb.	Nodo	N [kg]	T1-2 [kg]	T1-3 [kg]	Mt [kgm]	M1-3 [kgm]	M1-2 [kgm]
	102	-24305.7	758.9	427.9	182.9	330.7	3328.4
13	81	23445.7	-102.7	-254.8	-326.0	123.9	-1132.7
	102	-21445.7	102.7	254.8	326.0	130.8	1030.0
14	81	25737.8	-118.4	-341.0	-248.9	353.7	-953.2
	102	-23737.8	118.4	341.0	248.9	-12.6	834.8
15	81	24189.4	-3204.2	-313.4	400.5	375.0	-16445.1
	102	-22189.4	3204.2	313.4	-400.5	-61.6	13240.9
16	81	25187.5	-182.8	-603.6	-325.1	3112.7	-6151.5
	102	-23187.5	182.8	603.6	325.1	-2682.3	5013.9
17	81	24019.2	-1924.2	-104.8	-1815.9	-259.7	-11401.0
	102	-22019.2	1924.2	104.8	1815.9	328.8	9326.0
1	102	31400.8	-2873.7	-344.5	169.6	-252.4	-12286.4
	124	-28800.8	2873.7	344.5	-169.6	596.9	9412.7
2	102	31051.4	-4634.9	-311.9	579.6	-96.1	-19467.4
	124	-28451.4	4634.9	311.9	-579.6	408.0	14832.5
3	102	33160.7	-2885.0	-376.2	172.1	-424.6	-12089.8
	124	-30560.7	2885.0	376.2	-172.1	800.7	9204.8
4	102	26831.0	-2.7	-1304.2	174.3	2525.3	-771.8
	124	-24231.0	2.7	1304.2	-174.3	-1221.1	769.1
5	102	22913.6	-1061.5	818.4	-324.8	-3128.5	-4612.6
	124	-20913.6	1061.5	-818.4	324.8	-1447.8	3611.3
6	102	21860.0	-1975.8	555.1	-1701.0	-1997.7	-8396.5
	124	-19860.0	1975.8	-555.1	1701.0	335.6	6582.7
7	102	23558.2	-1923.7	-250.1	70.5	-171.1	-8318.0
	124	-21558.2	1923.7	250.1	-70.5	421.1	6394.2
8	102	23325.2	-3097.9	-228.3	343.9	-66.9	-13105.3
	124	-21325.2	3097.9	228.3	-343.9	295.2	10007.5
9	102	24731.4	-1931.3	-271.2	72.2	-285.8	-8186.9
	124	-22731.4	1931.3	271.2	-72.2	557.0	6255.6
10	102	20511.7	-9.7	-889.8	73.7	1680.7	-641.6
	124	-18511.7	9.7	889.8	-73.7	-790.9	631.8
11	102	24296.0	-145.5	-275.8	-332.1	-392.8	-924.8
	124	-22296.0	145.5	275.8	332.1	668.7	779.3
12	102	24266.7	-735.3	-268.1	-196.1	-346.2	-3327.5
	124	-22266.7	735.3	268.1	196.1	614.3	2592.2
13	102	21407.3	-101.9	-206.0	-327.4	-145.7	-1030.1
	124	-19407.3	101.9	206.0	327.4	351.7	928.2
14	102	23704.0	-117.7	-400.4	-250.1	3.3	-834.7
	124	-21704.0	117.7	400.4	250.1	397.1	717.1
15	102	22152.0	-3090.3	-207.2	342.2	47.9	-13236.4
	124	-20152.0	3090.3	207.2	-342.2	159.3	10146.0
16	102	23115.8	-184.7	930.6	-324.4	2686.2	-5014.2
	124	-21115.8	184.7	-930.6	324.4	-1755.4	3937.3
17	102	21962.2	-1861.1	626.0	-1814.1	-348.0	-9326.3
	124	-19962.2	1861.1	-626.0	1814.1	306.0	7367.1

Comb.	Nodo	N [kg]	T1-2 [kg]	T1-3 [kg]	Mt [kgm]	M1-3 [kgm]	M1-2 [kgm]
1	124	28750.2	-2752.6	42.0	93.1	-616.9	-9408.1
	145	-26150.2	2752.6	-42.0	-93.1	574.9	6655.5
2	124	28401.6	-4433.9	90.4	453.9	-426.9	-14824.9
	145	-25801.6	4433.9	-90.4	-453.9	336.5	10390.9
3	124	30509.4	-2763.7	73.8	95.4	-821.5	-9200.2
	145	-27909.4	2763.7	-73.8	-95.4	747.7	6436.5
4	124	24218.4	-3.2	-1642.3	175.9	1248.2	-768.8
	145	-21618.4	3.2	1642.3	-175.9	394.1	765.6
5	124	20844.7	-1013.3	1232.9	-324.6	1449.2	-3611.6
	145	-18844.7	1013.3	-1232.9	324.6	-694.1	2691.4
6	124	19804.2	-1890.4	799.0	-1699.8	-354.6	-6583.0
	145	-17804.2	1890.4	-799.0	1699.8	271.6	4933.1
7	124	21519.3	-1842.9	17.8	19.4	-436.3	-6391.2
	145	-19519.3	1842.9	-17.8	-19.4	418.6	4548.3
8	124	21286.9	-2963.8	50.0	259.9	-309.7	-10002.3
	145	-19286.9	2963.8	-50.0	-259.9	259.7	7038.5
9	124	22692.1	-1850.3	39.0	20.9	-572.8	-6252.6
	145	-20692.1	1850.3	-39.0	-20.9	533.8	4402.3
10	124	18498.1	-10.0	-1105.1	74.6	807.1	-631.6
	145	-16498.1	10.0	1105.1	-74.6	298.1	621.7
11	124	22256.2	-144.5	-15.8	-334.0	-685.2	-779.4
	145	-20256.2	144.5	15.8	334.0	701.0	634.9
12	124	22227.1	-707.7	1.0	-214.4	-630.5	-2591.2
	145	-20227.1	707.7	-1.0	214.4	629.4	1883.6
13	124	19368.4	-101.0	-58.0	-328.9	-367.0	-928.3
	145	-17368.4	101.0	58.0	328.9	425.0	827.2
14	124	21669.4	-116.9	-230.0	-251.5	-407.1	-717.1
	145	-19669.4	116.9	230.0	251.5	637.1	600.2
15	124	20114.1	-2956.4	28.8	258.4	-173.3	-10140.9
	145	-18114.1	2956.4	-28.8	-258.4	144.5	7184.6
16	124	21044.1	-186.4	1366.5	-324.0	1757.5	-3937.7
	145	-19044.1	186.4	-1366.5	324.0	-911.1	256.6
17	124	19905.0	-1789.4	879.3	-1812.7	-325.3	-7367.4
	145	-17905.0	1789.4	-879.3	1812.7	249.0	-3389.8
1	145	26115.6	-2657.2	403.5	12.5	-588.3	-6651.6
	183	-17165.1	2362.7	-403.5	-12.5	-783.6	-1882.3
2	145	25768.2	-4276.0	498.6	321.3	-348.6	-10384.2
	183	-16817.7	3785.1	-498.6	-321.3	-1346.5	-3319.7
3	145	27874.1	-2668.2	483.6	14.5	-762.0	-6432.6
	183	-18923.6	2373.7	-483.6	-14.5	-882.1	-2138.8
4	145	21621.7	-3.5	-1866.8	177.0	-360.1	-765.4
	183	-12671.2	3.5	1866.8	-177.0	6707.2	753.6
5	145	18781.5	-899.3	1393.9	-324.6	690.1	-2691.8
	183	-11896.5	899.3	-1393.9	324.6	-3954.3	-874.2
6	145	17757.2	-1685.8	825.0	-1698.6	-282.0	-4933.5
	183	-10872.2	1685.8	-825.0	1698.6	-2237.7	-2235.7

Comb.	Nodo	N [kg]	T1-2 [kg]	T1-3 [kg]	Mt [kgm]	M1-3 [kgm]	M1-2 [kgm]
7	145	19492.8	-1779.3	267.3	-34.5	-428.8	-4545.7
	183	-12607.8	1582.9	-267.3	34.5	-480.1	-1170.0
8	145	19261.2	-2858.4	330.7	171.3	-269.0	-7034.1
	183	-12376.2	2531.2	-330.7	-171.3	-855.4	-2128.3
9	145	20665.1	-1786.6	320.7	-33.2	-544.6	-4399.6
	183	-13780.1	1590.3	-320.7	33.2	-545.7	-1341.0
10	145	16496.9	-10.1	-1246.2	75.1	-276.7	-621.5
	183	-9611.9	10.1	1246.2	-75.1	4513.8	587.2
11	145	20228.3	-143.5	191.8	-336.0	-712.8	-635.0
	183	-13343.3	143.5	-191.8	336.0	60.6	147.2
12	145	20199.7	-685.8	227.3	-233.7	-640.8	-1882.8
	183	-13314.7	620.3	-227.3	233.7	-131.9	-337.5
13	145	17341.8	-100.3	62.8	-330.4	-435.3	-827.4
	183	-10456.8	100.3	-62.8	330.4	221.7	486.4
14	145	19646.8	-116.1	-88.1	-252.9	-642.4	-600.3
	183	-12761.8	116.1	88.1	252.9	942.0	205.6
15	145	18088.9	-2851.1	277.3	170.0	-153.1	-7180.1
	183	-11203.9	2523.8	-277.3	-170.0	-789.7	-1957.3
16	145	18977.1	-977.5	1533.5	-323.9	908.2	-257.0
	183	-12092.1	977.5	-1533.5	323.9	-4308.5	-1002.7
17	145	17856.0	-1852.6	900.1	-1811.3	-259.2	3389.8
	183	-10971.0	1852.6	-900.1	1811.3	-2447.2	-2497.2
1	183	16199.4	-2389.3	-402.5	595.3	783.6	1358.3
	213	-6038.0	2054.9	402.5	-595.3	770.0	-9935.5
2	183	15852.0	-3823.8	-675.2	1184.6	1346.5	2796.5
	213	-5690.5	3266.5	675.2	-1184.6	1259.8	-16480.8
3	183	17957.9	-2401.0	-420.7	659.7	882.1	1614.8
	213	-7796.4	2066.6	420.7	-659.7	741.7	-10237.3
4	183	11705.5	-29.7	-443.6	-696.2	-6707.2	-1278.4
	213	-1544.1	29.7	443.6	696.2	8419.3	1163.9
5	183	11133.4	-632.6	329.7	-459.8	3954.3	469.9
	213	-3316.9	632.6	-329.7	459.8	-4371.4	-2620.6
6	183	10118.0	-1171.0	-132.4	-1599.8	2237.7	1831.6
	213	-2301.5	1171.0	132.4	1599.8	800.8	-5531.3
7	183	11865.0	-1600.9	-262.1	348.4	480.1	766.8
	213	-4048.5	1378.0	262.1	-348.4	531.8	-6516.0
8	183	11633.4	-2557.2	-444.0	741.3	855.4	1725.6
	213	-3816.9	2185.7	444.0	-741.3	858.4	-10879.5
9	183	13037.3	-1608.7	-274.3	391.3	545.7	937.8
	213	-5220.8	1385.8	274.3	-391.3	513.0	-6717.1
10	183	8869.0	-27.8	-289.5	-512.6	-4513.8	-991.0
	213	-1052.5	27.8	289.5	512.6	5631.4	883.6
11	183	12600.5	-148.9	4.5	-218.5	-60.6	-551.3
	213	-4784.0	148.9	-4.5	218.5	43.2	-23.4
12	183	12571.8	-629.9	-87.1	-19.8	131.9	-66.2
	213	-4755.3	555.6	87.1	19.8	204.2	-2221.7

Comb.	Nodo	N [kg]	T1-2 [kg]	T1-3 [kg]	Mt [kgm]	M1-3 [kgm]	M1-2 [kgm]
13	183	9714.0	-103.8	31.7	-313.6	-221.7	-890.5
	213	-1897.5	103.8	-31.7	313.6	99.1	489.8
14	183	12018.9	-124.0	-56.2	-270.6	-942.0	-609.5
	213	-4202.4	124.0	56.2	270.6	1158.8	130.9
15	183	10461.1	-2549.4	-431.8	698.3	789.7	1554.7
	213	-2644.6	2177.9	431.8	-698.3	877.3	-10678.3
16	183	11325.9	-689.7	367.5	-469.9	4308.5	598.3
	213	-3509.4	689.7	-367.5	469.9	-4783.8	-2893.8
17	183	10215.2	-1299.1	-144.9	-1705.8	2447.2	2092.8
	213	-2398.7	1299.1	144.9	1705.8	845.5	-6065.1
1	53	435.6	-985.0	-1684.4	-4.4	1689.6	-377.9
	91	-276.4	820.7	1684.4	4.4	247.5	-660.3
2	53	402.1	-1640.9	-1459.3	-7.7	1457.3	-646.0
	91	-242.8	1367.0	1459.3	7.7	220.9	-1083.5
3	53	474.3	-983.3	-2018.3	-4.3	2025.8	-379.2
	91	-315.1	819.0	2018.3	4.3	295.2	-657.1
4	53	554.5	-7.5	-3445.6	0.5	3594.7	14.0
	91	-395.2	7.5	3445.6	-0.5	367.7	-22.7
5	53	133.9	-3.1	431.3	-0.2	-509.7	9.5
	91	-11.4	3.1	-431.3	0.2	11.1	-1.0
6	53	227.6	-16.9	-147.7	-0.6	106.9	-24.9
	91	-105.1	16.9	147.7	0.6	61.3	18.2
7	53	315.4	-657.0	-1202.0	-2.9	1206.9	-250.4
	91	-192.9	547.4	1202.0	2.9	175.3	-442.1
8	53	293.1	-1094.2	-1051.8	-5.1	1052.0	-429.1
	91	-170.6	911.6	1051.8	5.1	157.6	-724.3
9	53	341.2	-655.8	-1424.5	-2.9	1431.0	-251.2
	91	-218.7	546.3	1424.5	2.9	207.1	-440.0
10	53	394.7	-5.3	-2376.0	0.4	2477.0	10.9
	91	-272.2	5.3	2376.0	-0.4	255.4	-17.0
11	53	339.9	0.1	-1492.3	0.4	1506.2	15.2
	91	-217.4	-0.1	1492.3	-0.4	209.9	-15.1
12	53	332.6	-218.6	-1434.7	-0.7	1446.2	-74.0
	91	-210.1	182.0	1434.7	0.7	203.7	-156.4
13	53	253.8	-1.8	-933.3	0.3	945.0	14.3
	91	-131.3	1.8	933.3	-0.3	128.2	-16.3
14	53	352.9	-0.8	-1699.5	0.4	1731.2	14.0
	91	-230.4	0.8	1699.5	-0.4	223.3	-14.9
15	53	267.3	-1095.4	-829.3	-5.1	827.9	-428.3
	91	-144.8	912.8	829.3	5.1	125.7	-726.4
16	53	125.2	-3.3	530.9	-0.2	-617.0	9.0
	91	-2.7	3.3	-530.9	0.2	3.0	1.0
17	53	227.2	-18.2	-94.2	-0.7	49.0	-29.1
	91	-104.7	18.2	94.2	0.7	57.4	23.2
1	91	233.8	-629.6	-158.0	-8.6	-29.2	647.8

Comb.	Nodo	N [kg]	T1-2 [kg]	T1-3 [kg]	Mt [kgm]	M1-3 [kgm]	M1-2 [kgm]
	113	-127.8	629.6	158.0	8.6	187.3	-1277.4
2	91	198.5	-1049.2	-126.9	-14.6	-36.7	1062.4
	113	-92.5	1049.2	126.9	14.6	163.6	-2111.6
3	91	274.6	-628.3	-196.5	-8.5	-29.9	644.6
	113	-168.6	628.3	196.5	8.5	226.4	-1272.9
4	91	313.1	-5.3	-667.2	0.4	167.5	22.6
	113	-207.1	5.3	667.2	-0.4	499.8	-28.0
5	91	-10.1	-1.8	259.3	-0.2	-130.6	0.9
	113	91.7	1.8	-259.3	0.2	-132.2	-21.6
6	91	65.8	-13.0	102.1	-0.5	-78.1	-18.8
	113	15.7	13.0	-102.1	0.5	-25.9	-47.6
7	91	158.8	-419.9	-113.5	-5.7	-19.9	433.8
	113	-77.3	419.9	113.5	5.7	133.4	-853.7
8	91	135.3	-699.7	-92.7	-9.7	-24.9	710.2
	113	-53.7	699.7	92.7	9.7	117.6	-1409.9
9	91	186.0	-419.1	-139.1	-5.7	-20.3	431.7
	113	-104.4	419.1	139.1	5.7	159.5	-850.7
10	91	211.6	-3.7	-453.0	0.3	111.2	17.0
	113	-130.1	3.7	453.0	-0.3	341.7	-20.8
11	91	183.9	0.5	-155.4	0.3	-10.6	15.3
	113	-102.4	-0.5	155.4	-0.3	166.0	-14.8
12	91	176.3	-139.4	-146.6	-1.7	-13.4	153.7
	113	-94.8	139.4	146.6	1.7	160.0	-293.1
13	91	92.4	-0.9	-95.1	0.2	-7.0	16.5
	113	-10.9	0.9	95.1	-0.2	102.1	-17.5
14	91	191.6	-0.2	-218.7	0.3	13.9	15.1
	113	-110.1	0.2	218.7	-0.3	204.8	-15.3
15	91	108.1	-700.5	-67.1	-9.8	-24.5	712.4
	113	-26.6	700.5	67.1	9.8	91.5	-1412.9
16	91	-17.8	-1.9	287.1	-0.2	-142.0	-1.2
	113	99.4	1.9	-287.1	0.2	-149.8	-22.6
17	91	65.5	-13.9	117.2	-0.6	-84.6	-23.9
	113	16.1	13.9	-117.2	0.6	-35.0	-52.5
1	113	70.6	-402.5	-107.8	-4.3	22.4	1267.4
	134	35.3	402.5	107.8	4.3	85.4	-1670.0
2	113	33.3	-671.6	-88.7	-7.3	13.0	2095.1
	134	72.7	671.6	88.7	7.3	75.8	-2766.7
3	113	113.4	-401.6	-133.3	-4.2	27.6	1263.0
	134	-7.5	401.6	133.3	4.2	105.7	-1664.6
4	113	111.4	-3.1	-341.0	0.3	17.4	27.6
	134	-5.4	3.1	341.0	-0.3	323.6	-30.7
5	113	-125.2	-0.8	106.6	-0.2	43.6	21.7
	134	206.8	0.8	-106.6	0.2	-131.1	-20.6
6	113	-65.4	-10.3	37.7	-0.4	30.9	47.9
	134	146.9	10.3	-37.7	0.4	-51.7	-46.8
7	113	31.9	-268.4	-76.5	-2.8	16.4	847.1

Comb.	Nodo	N [kg]	T1-2 [kg]	T1-3 [kg]	Mt [kgm]	M1-3 [kgm]	M1-2 [kgm]
	134	49.6	268.4	76.5	2.8	60.1	-1115.5
8	113	7.0	-447.8	-63.7	-4.9	10.1	1398.9
	134	74.5	447.8	63.7	4.9	53.6	-1846.7
9	113	60.5	-267.8	-93.5	-2.8	19.9	844.1
	134	21.1	267.8	93.5	2.8	73.6	-1111.9
10	113	59.1	-2.1	-231.9	0.2	13.0	20.5
	134	22.4	2.1	231.9	-0.2	218.9	-22.7
11	113	58.1	1.1	-101.2	0.2	26.3	14.8
	134	23.4	-1.1	101.2	-0.2	74.9	-13.7
12	113	50.1	-88.6	-96.1	-0.8	23.5	290.9
	134	31.4	88.6	96.1	0.8	72.6	-379.4
13	113	-38.7	-0.0	-59.4	0.1	17.0	17.5
	134	120.2	0.0	59.4	-0.1	42.4	-17.5
14	113	60.5	0.6	-129.7	0.2	24.1	15.2
	134	21.0	-0.6	129.7	-0.2	105.6	-14.6
15	113	-21.5	-448.4	-46.7	-4.9	6.6	1401.9
	134	103.0	448.4	46.7	4.9	40.1	-1850.2
16	113	-132.3	-0.8	119.8	-0.2	42.8	22.8
	134	213.8	0.8	-119.8	0.2	-144.3	-21.6
17	113	-65.6	-11.1	45.2	-0.5	14.6	52.8
	134	147.1	11.1	-45.2	0.5	-58.7	-51.3
1	134	-93.1	-193.4	46.5	-1.7	119.1	1663.4
	158	199.1	193.4	-46.5	1.7	-165.6	-1856.8
2	134	-132.6	-323.4	43.8	-3.0	95.5	2755.9
	158	238.6	323.4	-43.8	3.0	-139.3	-3079.4
3	134	-48.3	-192.8	57.3	-1.6	142.2	1658.0
	158	154.3	192.8	-57.3	1.6	-199.4	-1850.8
4	134	-85.7	-1.4	-157.2	0.2	164.7	30.1
	158	191.7	1.4	157.2	-0.2	-7.5	-31.5
5	134	-244.9	-0.0	126.7	0.0	92.0	20.7
	158	326.5	0.0	-126.7	-0.0	-173.3	-18.9
6	134	-196.4	-8.1	16.4	-0.3	61.0	46.7
	158	277.9	8.1	-16.4	0.3	-86.6	-45.7
7	134	-95.3	-128.9	32.9	-1.1	86.2	1111.1
	158	176.8	128.9	-32.9	1.1	-119.0	-1240.0
8	134	-121.7	-215.6	31.1	-2.0	70.4	1839.5
	158	203.2	215.6	-31.1	2.0	-101.5	-2055.1
9	134	-65.4	-128.5	40.0	-1.1	101.5	1107.5
	158	146.9	128.5	-40.0	1.1	-141.6	-1236.0
10	134	-90.4	-0.9	-102.9	0.2	116.6	22.3
	158	171.9	0.9	102.9	-0.2	-13.6	-23.2
11	134	-67.9	1.4	39.0	0.2	113.9	13.5
	158	149.5	-1.4	-39.0	-0.2	-153.0	-12.1
12	134	-76.5	-41.9	38.6	-0.2	107.3	377.9
	158	158.0	41.9	-38.6	0.2	-145.8	-419.8
13	134	-169.9	0.7	22.8	0.1	74.8	17.4

Comb.	Nodo	N [kg]	T1-2 [kg]	T1-3 [kg]	Mt [kgm]	M1-3 [kgm]	M1-2 [kgm]
	158	251.5	-0.7	-22.8	-0.1	-97.6	-16.7
14	134	-70.2	1.0	11.8	0.2	116.5	14.4
	158	151.7	-1.0	-11.8	-0.2	-128.3	-13.4
15	134	-151.5	-216.0	23.9	-2.1	55.0	1843.1
	158	233.0	216.0	-23.9	2.1	-79.0	-2059.0
16	134	-251.9	-0.1	135.8	-0.2	96.1	21.7
	158	333.4	0.1	-135.8	0.2	-180.3	-19.7
17	134	-196.5	-8.9	16.1	-0.4	60.8	51.2
	158	278.0	8.9	-16.1	0.4	-86.7	-49.6
1	158	-225.4	-137.2	-222.6	3.2	390.6	1854.1
	189	1207.0	-1504.1	222.6	-3.2	887.0	2068.9
2	158	-266.7	-229.5	-186.6	5.3	326.8	3075.1
	189	1248.4	-2506.0	186.6	-5.3	744.1	3458.5
3	158	-178.7	-136.9	-269.3	3.3	471.8	1848.1
	189	1160.4	-1504.4	269.3	-3.3	1074.2	2076.9
4	158	-252.0	-0.6	-343.1	0.2	505.0	30.9
	189	1233.7	0.6	343.1	-0.2	1464.4	-34.1
5	158	-343.7	5.8	-27.2	0.0	113.3	18.9
	189	1098.9	-5.8	27.2	-0.0	41.9	17.3
6	158	-302.1	10.1	-63.4	0.2	147.1	45.5
	189	1057.2	-10.1	63.4	-0.2	215.9	36.5
7	158	-198.3	-91.3	-159.4	2.2	280.1	1238.2
	189	953.4	-1002.9	159.4	-2.2	634.9	1377.8
8	158	-225.9	-152.9	-135.4	3.5	237.6	2052.2
	189	981.0	-1670.8	135.4	-3.5	539.6	2304.2
9	158	-167.2	-91.1	-190.6	2.2	334.2	1234.2
	189	922.3	-1003.1	190.6	-2.2	759.7	1383.2
10	158	-216.1	-0.3	-239.8	0.1	356.4	22.7
	189	971.2	0.3	239.8	-0.1	1019.9	-24.2
11	158	-170.2	1.2	-205.6	0.1	361.5	11.9
	189	925.3	-1.2	205.6	-0.1	818.7	-4.8
12	158	-179.1	-29.5	-195.9	0.8	344.3	419.0
	189	934.2	-335.2	195.9	-0.8	780.4	458.2
13	158	-277.1	0.9	-128.7	0.0	227.8	16.5
	189	1032.3	-0.9	128.7	-0.0	510.9	-11.2
14	158	-177.1	1.0	-216.8	0.1	368.0	13.1
	189	932.2	-1.0	216.8	-0.1	876.4	-7.5
15	158	-257.0	-153.1	-104.2	3.5	183.4	2056.2
	189	1012.1	-1670.6	104.2	-3.5	414.8	2298.9
16	158	-351.2	6.1	-19.9	0.0	105.1	19.7
	189	1106.3	-6.1	19.9	-0.0	7.7	19.8
17	158	-302.2	10.7	-59.2	0.3	142.3	49.4
	189	1057.4	-10.7	59.2	-0.3	196.5	40.9
1	54	1139.4	-1282.7	-57.4	0.0	61.6	-292.7
	92	-942.9	954.5	57.4	-0.0	4.4	-993.7

Comb.	Nodo	N [kg]	T1-2 [kg]	T1-3 [kg]	Mt [kgm]	M1-3 [kgm]	M1-2 [kgm]
2	54	990.5	-2142.2	-13.9	0.0	15.8	-506.7
	92	-794.0	1595.3	13.9	-0.0	0.1	-1642.3
3	54	1408.3	-1281.2	-76.8	0.1	83.3	-289.0
	92	-1211.7	953.0	76.8	-0.1	5.1	-995.6
4	54	1048.7	4.5	-1867.2	0.2	2094.1	21.6
	92	-852.2	-4.5	1867.2	-0.2	53.2	-16.4
5	54	451.1	0.2	1077.3	-0.3	-1220.4	7.6
	92	-299.9	-0.2	-1077.3	0.3	-23.1	-10.1
6	54	440.3	-22.3	527.7	-0.4	-604.6	-13.7
	92	-289.2	22.3	-527.7	0.4	-6.0	-23.1
7	54	797.6	-854.9	-51.9	0.0	55.7	-194.1
	92	-646.4	636.1	51.9	-0.0	4.1	-663.2
8	54	698.4	-1427.9	-22.9	0.0	25.1	-336.9
	92	-547.2	1063.3	22.9	-0.0	1.2	-1095.6
9	54	976.8	-853.9	-64.9	0.0	70.1	-191.7
	92	-825.7	635.1	64.9	-0.0	4.5	-664.5
10	54	737.2	3.2	-1258.5	0.1	1410.6	15.4
	92	-586.0	-3.2	1258.5	-0.1	36.6	-11.7
11	54	1001.7	5.1	-113.5	0.0	121.6	19.7
	92	-850.5	-5.1	113.5	-0.0	9.0	-13.9
12	54	965.8	-281.4	-98.5	0.0	105.7	-51.3
	92	-814.7	208.4	98.5	-0.0	7.5	-230.3
13	54	555.1	2.8	-99.5	0.0	105.9	12.5
	92	-403.9	-2.8	99.5	-0.0	8.5	-9.2
14	54	973.6	4.9	-345.6	0.1	382.8	19.1
	92	-822.4	-4.9	345.6	-0.1	14.6	-13.5
15	54	519.1	-1428.9	-10.0	0.0	10.7	-339.3
	92	-368.0	1064.3	10.0	-0.0	0.8	-1094.3
16	54	451.0	-0.1	1172.8	-0.3	-1328.5	7.0
	92	-299.9	0.1	-1172.8	0.3	-26.2	-16.4
17	54	439.1	-24.1	579.0	-0.5	-663.0	-16.6
	92	-287.9	24.1	-579.0	0.5	-7.5	-27.0
1	92	1058.5	-812.7	-17.8	0.0	5.5	984.3
	114	-952.5	812.7	17.8	-0.0	12.3	-1797.0
2	92	890.5	-1358.9	-9.6	0.0	2.2	1625.8
	114	-784.5	1358.9	9.6	-0.0	7.4	-2984.7
3	92	1359.4	-810.9	-24.6	0.1	8.5	986.4
	114	-1253.4	810.9	24.6	-0.1	16.1	-1797.3
4	92	957.2	4.4	-735.5	0.2	333.4	17.2
	114	-851.2	-4.4	735.5	-0.2	402.2	-12.8
5	92	338.5	0.3	454.8	-0.3	-175.1	16.1
	114	-257.0	-0.3	-454.8	0.3	-244.5	-8.7
6	92	326.5	-17.7	231.7	-0.4	8.9	25.2
	114	-245.0	17.7	-231.7	0.4	-119.1	-35.3
7	92	725.9	-541.6	-15.2	0.0	4.9	656.9
	114	-644.3	541.6	15.2	-0.0	10.3	-1198.6

Comb.	Nodo	N [kg]	T1-2 [kg]	T1-3 [kg]	Mt [kgm]	M1-3 [kgm]	M1-2 [kgm]
8	92	613.9	-905.7	-9.7	0.0	2.7	1084.6
	114	-532.3	905.7	9.7	-0.0	7.0	-1990.4
9	92	926.5	-540.4	-19.7	0.0	6.9	658.3
	114	-845.0	540.4	19.7	-0.0	12.8	-1198.8
10	92	658.3	3.1	-493.7	0.2	223.5	12.2
	114	-576.8	-3.1	493.7	-0.2	270.2	-9.1
11	92	955.2	5.2	-29.5	0.1	11.0	14.7
	114	-873.7	-5.2	29.5	-0.1	18.5	-9.4
12	92	914.7	-176.8	-26.6	0.0	9.8	228.7
	114	-833.1	176.8	26.6	-0.0	16.8	-405.5
13	92	454.7	2.6	-24.2	0.0	8.8	9.7
	114	-373.2	-2.6	24.2	-0.0	15.4	-7.1
14	92	923.6	5.0	-123.4	0.1	54.0	14.3
	114	-842.0	-5.0	123.4	-0.1	69.4	-9.3
15	92	413.2	-906.9	-5.1	-0.0	0.7	1083.3
	114	-331.7	906.9	5.1	0.0	4.4	-1990.2
16	92	338.4	0.1	493.7	-0.3	-190.6	16.8
	114	-256.9	-0.1	-493.7	0.3	-265.3	-9.2
17	92	325.1	-19.2	252.7	-0.5	9.1	27.5
	114	-243.6	19.2	-252.7	0.5	-129.9	-37.5
1	114	1027.1	-499.0	4.2	0.0	-3.2	1789.9
	135	-921.1	499.0	-4.2	-0.0	-1.1	-2288.8
2	114	840.7	-836.3	5.1	-0.0	-5.8	2972.1
	135	-734.8	836.3	-5.1	0.0	0.8	-3808.4
3	114	1358.6	-496.8	2.6	0.0	-3.3	1790.4
	135	-1252.6	496.8	-2.6	-0.0	0.7	-2287.2
4	114	916.2	4.6	-260.4	0.2	-25.6	13.6
	135	-810.2	-4.6	260.4	-0.2	286.0	-9.0
5	114	266.8	0.7	145.9	-0.3	35.2	9.1
	135	-185.2	-0.7	-145.9	0.3	-195.0	-8.0
6	114	253.5	-12.0	-0.7	-0.4	18.4	35.3
	135	-171.9	12.0	0.7	0.4	-102.4	-45.6
7	114	692.8	-332.5	2.7	0.0	-1.9	1193.9
	135	-611.2	332.5	-2.7	-0.0	-0.8	-1526.4
8	114	568.5	-557.4	3.2	-0.0	-3.6	1982.0
	135	-487.0	557.4	-3.2	0.0	0.4	-2539.4
9	114	913.7	-331.1	1.6	0.0	-2.0	1194.2
	135	-832.2	331.1	-1.6	-0.0	0.4	-1525.3
10	114	618.8	3.2	-173.7	0.2	-16.8	9.7
	135	-537.3	-3.2	173.7	-0.2	190.6	-6.5
11	114	946.3	5.6	-0.3	0.1	0.9	10.2
	135	-864.8	-5.6	0.3	-0.1	-0.6	-4.6
12	114	901.3	-106.7	0.1	0.0	-0.0	404.5
	135	-819.8	106.7	-0.1	-0.0	-0.1	-511.2
13	114	394.6	2.6	0.0	0.0	1.3	7.5
	135	-313.0	-2.6	-0.0	-0.0	-1.4	-4.9

Comb.	Nodo	N [kg]	T1-2 [kg]	T1-3 [kg]	Mt [kgm]	M1-3 [kgm]	M1-2 [kgm]
14	114	911.4	5.4	-35.3	0.1	-2.7	10.1
	135	-829.8	-5.4	35.3	-0.1	38.0	-4.7
15	114	347.5	-558.8	4.3	-0.0	-3.5	1981.7
	135	-266.0	558.8	-4.3	0.0	-0.8	-2540.5
16	114	266.7	0.5	158.2	-0.3	40.2	9.6
	135	-185.2	-0.5	-158.2	0.3	-210.5	-8.6
17	114	251.8	-13.1	-0.9	-0.5	21.0	37.6
	135	-170.3	13.1	0.9	0.5	-110.5	-48.4
1	135	993.5	-173.7	12.7	-0.0	10.0	2284.9
	159	-887.6	173.7	-12.7	0.0	-22.6	-2458.6
2	135	789.0	-294.9	9.1	-0.1	0.1	3801.1
	159	-683.0	294.9	-9.1	0.1	-9.2	-4096.0
3	135	1355.1	-171.1	13.5	0.0	11.6	2283.4
	159	-1249.1	171.1	-13.5	-0.0	-25.2	-2454.6
4	135	873.4	5.4	-164.1	0.2	59.6	9.9
	159	-767.4	-5.4	164.1	-0.2	104.5	-4.5
5	135	194.1	1.4	109.6	-0.2	45.9	8.3
	159	-112.5	-1.4	-109.6	0.2	-108.6	-6.7
6	135	179.4	-5.0	6.3	-0.4	13.8	45.7
	159	-97.9	5.0	-6.3	0.4	-29.0	-49.8
7	135	658.1	-115.7	9.7	-0.0	9.1	1523.8
	159	-576.6	115.7	-9.7	0.0	-18.7	-1639.4
8	135	521.7	-196.5	7.3	-0.0	2.5	2534.6
	159	-440.2	196.5	-7.3	0.0	-9.8	-2731.0
9	135	899.2	-113.9	10.2	0.0	10.2	1522.8
	159	-817.6	113.9	-10.2	-0.0	-20.4	-1636.7
10	135	578.0	3.7	-108.2	0.1	42.2	7.1
	159	-496.5	-3.7	108.2	-0.1	66.0	-3.4
11	135	935.7	6.6	12.8	0.1	20.1	5.4
	159	-854.1	-6.6	-12.8	-0.1	-33.0	1.2
12	135	886.1	-33.8	11.8	0.0	16.8	510.9
	159	-804.6	33.8	-11.8	-0.0	-28.6	-544.7
13	135	333.4	2.9	10.8	0.0	18.5	5.4
	159	-251.9	-2.9	-10.8	-0.0	-29.2	-2.5
14	135	897.4	6.3	-11.3	0.1	24.8	5.4
	159	-815.9	-6.3	11.3	-0.1	-13.4	0.8
15	135	280.7	-198.2	6.7	-0.1	1.4	2535.5
	159	-199.2	198.2	-6.7	0.1	-8.1	-2733.7
16	135	194.0	1.3	118.2	-0.3	50.4	8.9
	159	-112.5	-1.3	-118.2	0.3	-114.9	-7.3
17	135	177.6	-5.6	6.0	-0.4	13.7	48.5
	159	-96.1	5.6	-6.0	0.4	-28.9	-53.0
1	159	1003.6	13.9	-15.9	-0.0	34.9	2458.0
	190	-22.7	-1651.9	15.9	0.0	56.3	2322.8
2	159	779.6	16.3	-4.2	-0.0	11.1	4094.4

Comb.	Nodo	N [kg]	T1-2 [kg]	T1-3 [kg]	Mt [kgm]	M1-3 [kgm]	M1-2 [kgm]
	190	201.4	-2746.3	4.2	0.0	12.9	3834.3
3	159	1397.7	17.0	-19.3	0.0	41.3	2454.2
	190	-416.7	-1655.0	19.3	-0.0	69.5	2344.5
4	159	873.5	6.9	-183.6	0.1	235.6	5.3
	190	107.4	-6.9	183.6	-0.1	818.0	34.3
5	159	151.0	11.4	80.3	-0.2	-70.5	7.0
	190	603.5	-11.4	-80.3	0.2	-391.2	37.8
6	159	135.1	19.8	33.3	-0.3	-17.8	50.0
	190	619.5	-19.8	-33.3	0.3	-174.1	61.4
7	159	656.3	9.4	-13.8	-0.0	29.9	1639.1
	190	98.2	-1101.4	13.8	0.0	49.5	1549.1
8	159	506.9	11.0	-6.0	-0.0	14.0	2730.0
	190	247.6	-1831.1	6.0	0.0	20.6	2556.8
9	159	919.0	11.5	-16.1	-0.0	34.1	1636.6
	190	-164.5	-1103.5	16.1	0.0	58.3	1563.6
10	159	569.6	4.8	-125.6	0.1	163.7	3.9
	190	185.0	-4.8	125.6	-0.1	557.3	23.5
11	159	959.6	8.2	-28.1	0.0	58.0	-0.4
	190	-205.1	-8.2	28.1	-0.0	103.2	47.3
12	159	905.3	9.1	-24.1	0.0	50.0	545.1
	190	-150.8	-373.1	24.1	-0.0	88.5	551.7
13	159	302.9	3.6	-24.8	-0.0	51.2	2.9
	190	451.7	-3.6	24.8	0.0	91.0	18.0
14	159	917.9	7.8	-48.1	0.0	80.0	-0.1
	190	-163.3	-7.8	48.1	-0.0	195.9	45.0
15	159	244.2	9.0	-3.7	-0.0	9.7	2732.5
	190	510.3	-1829.0	3.7	0.0	11.7	2542.3
16	159	151.0	11.9	89.4	-0.2	-81.7	7.7
	190	603.5	-11.9	-89.4	0.2	-432.4	39.9
17	159	133.3	21.0	38.4	-0.4	-24.1	53.2
	190	621.3	-21.0	-38.4	0.4	-196.9	66.0
1	55	493.0	-987.8	1622.4	4.2	-1627.5	-360.6
	93	-333.9	823.9	-1622.4	-4.2	-238.2	-681.2
2	55	420.1	-1651.3	1442.9	7.2	-1446.9	-611.8
	93	-261.0	1378.2	-1442.9	-7.2	-212.5	-1130.1
3	55	546.9	-985.9	1933.0	4.2	-1937.2	-360.0
	93	-387.7	822.1	-1933.0	-4.2	-285.7	-679.6
4	55	358.4	10.4	-351.9	-0.1	478.1	18.6
	93	-199.3	-10.4	351.9	0.1	-73.4	-6.7
5	55	435.3	-10.9	1946.8	-0.1	-2039.2	-17.8
	93	-312.9	10.9	-1946.8	0.1	-202.6	-6.9
6	55	341.6	-24.0	1354.1	0.3	-1409.3	-40.9
	93	-219.2	24.0	-1354.1	-0.3	-150.0	-30.5
7	55	367.7	-658.2	1147.0	2.8	-1150.7	-239.9
	93	-245.2	549.0	-1147.0	-2.8	-168.4	-454.2
8	55	319.1	-1100.6	1027.4	4.8	-1030.3	-407.4

Comb.	Nodo	N [kg]	T1-2 [kg]	T1-3 [kg]	Mt [kgm]	M1-3 [kgm]	M1-2 [kgm]
	93	-196.7	918.5	-1027.4	-4.8	-151.2	-753.5
9	55	403.5	-657.0	1354.1	2.8	-1357.2	-239.5
	93	-281.1	547.7	-1354.1	-2.8	-200.0	-453.2
10	55	277.9	7.3	-169.2	-0.1	253.1	12.9
	93	-155.5	-7.3	169.2	0.1	-58.5	-4.5
11	55	447.6	6.1	1371.8	-0.2	-1375.2	9.9
	93	-325.1	-6.1	-1371.8	0.2	-202.4	-2.8
12	55	426.5	-215.0	1330.0	0.8	-1333.1	-73.7
	93	-304.0	178.6	-1330.0	-0.8	-196.4	-152.6
13	55	352.9	3.6	832.2	-0.1	-835.4	6.8
	93	-230.5	-3.6	-832.2	0.1	-121.7	-2.7
14	55	418.2	6.6	1090.7	-0.2	-1076.4	10.4
	93	-295.8	-6.6	-1090.7	0.2	-177.9	-2.8
15	55	283.2	-1101.8	820.3	4.8	-823.8	-407.8
	93	-160.8	919.7	-820.3	-4.8	-119.6	-754.6
16	55	444.4	-11.9	2047.0	-0.0	-2147.0	-20.1
	93	-322.0	11.9	-2047.0	0.0	-210.9	-8.1
17	55	342.1	-26.0	1407.0	0.4	-1466.6	-45.8
	93	-219.7	26.0	-1407.0	-0.4	-154.0	-35.6
1	93	299.8	-629.5	141.3	8.5	29.1	669.0
	115	-193.8	629.5	-141.3	-8.5	-170.4	-1298.5
2	93	221.0	-1053.3	123.7	14.4	27.6	1109.5
	115	-115.0	1053.3	-123.7	-14.4	-151.3	-2162.7
3	93	357.8	-627.9	169.8	8.5	34.1	667.4
	115	-251.8	627.9	-169.8	-8.5	-204.0	-1295.4
4	93	205.3	8.2	-376.3	-0.1	207.2	7.3
	115	-99.3	-8.2	376.3	0.1	169.2	1.0
5	93	265.4	-8.8	392.3	-0.1	-83.1	7.0
	115	-183.9	8.8	-392.3	0.1	-290.1	-5.5
6	93	188.3	-18.9	234.2	0.2	23.0	31.3
	115	-106.8	18.9	-234.2	-0.2	-182.2	-29.9
7	93	218.4	-419.4	98.1	5.7	21.7	446.1
	115	-136.9	419.4	-98.1	-5.7	-119.8	-865.5
8	93	165.9	-701.9	86.3	9.6	20.7	739.8
	115	-84.3	701.9	-86.3	-9.6	-107.0	-1441.7
9	93	257.1	-418.4	117.1	5.7	25.1	445.1
	115	-175.5	418.4	-117.1	-5.7	-142.1	-863.5
10	93	155.4	5.7	-247.1	-0.1	140.4	5.0
	115	-73.9	-5.7	247.1	0.1	106.6	0.8
11	93	305.1	5.0	117.2	-0.2	26.0	3.1
	115	-223.6	-5.0	-117.2	0.2	-143.2	1.9
12	93	282.3	-136.2	113.3	1.8	25.5	150.1
	115	-200.8	136.2	-113.3	-1.8	-138.8	-286.3
13	93	203.7	2.9	64.3	-0.1	19.8	2.8
	115	-122.1	-2.9	-64.3	0.1	-84.1	0.0
14	93	280.2	5.4	46.6	-0.2	49.5	3.2

Comb.	Nodo	N [kg]	T1-2 [kg]	T1-3 [kg]	Mt [kgm]	M1-3 [kgm]	M1-2 [kgm]
	115	-198.7	-5.4	-46.6	0.2	-96.1	2.2
15	93	127.2	-703.0	67.3	9.6	17.4	740.8
	115	-45.7	703.0	-67.3	-9.6	-84.6	-1443.8
16	93	273.4	-9.5	420.2	-0.1	-92.5	8.2
	115	-191.9	9.5	-420.2	0.1	-307.7	-6.9
17	93	188.5	-20.4	249.3	0.3	23.3	36.5
	115	-107.0	20.4	-249.3	-0.3	-191.3	-35.2
1	115	145.9	-399.5	123.1	4.3	-32.4	1288.8
	136	-39.9	399.5	-123.1	-4.3	-90.6	-1688.2
2	115	61.1	-669.0	105.6	7.4	-28.8	2146.3
	136	44.8	669.0	-105.6	-7.4	-76.8	-2815.3
3	115	208.0	-398.1	146.9	4.3	-38.7	1285.7
	136	-102.1	398.1	-146.9	-4.3	-108.2	-1683.8
4	115	91.1	6.3	-118.4	-0.1	-42.5	-0.4
	136	14.9	-6.3	118.4	0.1	160.9	6.7
5	115	126.5	-7.2	186.3	-0.1	16.0	5.6
	136	-45.0	7.2	-186.3	0.1	-207.9	-2.9
6	115	63.4	-15.3	54.3	0.2	2.8	30.1
	136	18.1	15.3	-54.3	-0.2	-127.6	-33.6
7	115	99.4	-266.1	87.1	2.9	-22.9	859.0
	136	-17.8	266.1	-87.1	-2.9	-64.2	-1125.2
8	115	42.9	-445.8	75.4	4.9	-20.5	1430.7
	136	38.6	445.8	-75.4	-4.9	-55.0	-1876.6
9	115	140.8	-265.2	103.0	2.8	-27.0	857.0
	136	-59.3	265.2	-103.0	-2.8	-76.0	-1122.2
10	115	62.8	4.4	-73.9	-0.1	-29.6	-0.4
	136	18.7	-4.4	73.9	0.1	103.5	4.8
11	115	192.9	4.0	107.4	-0.2	-27.3	-1.7
	136	-111.4	-4.0	-107.4	0.2	-80.1	5.7
12	115	168.3	-85.8	103.0	0.8	-26.5	284.3
	136	-86.8	85.8	-103.0	-0.8	-76.5	-370.1
13	115	84.6	2.2	65.1	-0.1	-16.4	0.1
	136	-3.1	-2.2	-65.1	0.1	-48.7	2.1
14	115	172.3	4.2	73.1	-0.2	-28.3	-2.0
	136	-90.8	-4.2	-73.1	0.2	-44.8	6.2
15	115	1.4	-446.7	59.5	4.9	-16.3	1432.8
	136	80.1	446.7	-59.5	-4.9	-43.2	-1879.5
16	115	133.7	-7.8	197.4	-0.1	21.2	7.0
	136	-52.2	7.8	-197.4	0.1	-221.3	-4.0
17	115	63.3	-16.5	54.1	0.2	5.6	35.4
	136	18.2	16.5	-54.1	-0.2	-134.6	-38.3
1	136	-8.2	-187.6	-9.3	1.8	-108.1	1681.8
	160	114.2	187.6	9.3	-1.8	117.5	-1869.3
2	136	-99.0	-315.0	-15.9	3.2	-99.9	2804.4
	160	204.9	315.0	15.9	-3.2	115.8	-3119.4

Comb.	Nodo	N [kg]	T1-2 [kg]	T1-3 [kg]	Mt [kgm]	M1-3 [kgm]	M1-2 [kgm]
3	136	58.1	-186.5	-16.6	1.8	-129.6	1677.4
	160	47.9	186.5	16.6	-1.8	146.2	-1863.9
4	136	-27.9	4.3	-195.3	-0.1	-55.5	-6.3
	160	133.9	-4.3	195.3	0.1	250.8	10.6
5	136	-8.3	-5.8	121.5	-0.3	-5.4	3.0
	160	89.9	5.8	-121.5	0.3	-61.1	-1.1
6	136	-62.5	-12.2	10.5	-0.4	-18.3	33.5
	160	144.0	12.2	-10.5	0.4	25.9	-37.9
7	136	-19.8	-125.0	-4.3	1.2	-75.5	1120.9
	160	101.3	125.0	4.3	-1.2	79.8	-1245.8
8	136	-80.3	-209.9	-8.7	2.1	-70.0	1869.3
	160	161.8	209.9	8.7	-2.1	78.7	-2079.2
9	136	24.4	-124.2	-9.1	1.2	-89.8	1118.0
	160	57.1	124.2	9.1	-1.2	98.9	-1242.2
10	136	-32.9	3.0	-128.3	-0.1	-40.4	-4.5
	160	114.5	-3.0	128.3	0.1	168.7	7.5
11	136	80.6	2.9	-0.8	-0.2	-86.7	-5.6
	160	0.9	-2.9	0.8	0.2	87.5	8.5
12	136	54.2	-39.5	-3.1	0.3	-85.2	368.7
	160	27.3	39.5	3.1	-0.3	88.4	-408.3
13	136	-34.5	1.4	9.4	-0.1	-49.3	-2.1
	160	116.0	-1.4	-9.4	0.1	39.9	3.4
14	136	63.7	3.0	-27.1	-0.2	-79.3	-6.0
	160	17.8	-3.0	27.1	0.2	106.4	9.0
15	136	-124.5	-210.6	-3.8	2.2	-55.7	1872.2
	160	206.0	210.6	3.8	-2.2	59.5	-2082.8
16	136	-1.2	-6.4	130.8	-0.3	-8.8	4.1
	160	82.7	6.4	-130.8	0.3	-68.2	-1.9
17	136	-62.8	-13.3	10.3	-0.4	-44.1	38.2
	160	144.3	13.3	-10.3	0.4	25.8	-41.9
1	160	-129.3	-128.7	197.3	-3.1	-331.6	1866.7
	191	1110.5	-1510.4	-197.3	3.1	-800.9	2098.9
2	160	-226.5	-215.7	179.9	-5.0	-307.6	3114.8
	191	1207.7	-2516.1	-179.9	5.0	-724.9	3487.3
3	160	-58.9	-127.9	238.9	-3.1	-402.9	1861.3
	191	1040.1	-1511.3	-238.9	3.1	-968.3	2109.1
4	160	-112.8	2.2	52.2	-0.2	-170.2	-10.3
	191	1094.0	-2.2	-52.2	0.2	-129.5	23.1
5	160	-114.3	0.7	156.7	-0.4	-197.8	1.2
	191	869.1	-0.7	-156.7	0.4	-702.8	4.5
6	160	-163.5	8.9	119.8	-0.5	-163.4	37.8
	191	918.2	-8.9	-119.8	0.5	-525.3	26.5
7	160	-113.5	-85.8	137.5	-2.1	-230.0	1244.0
	191	868.3	-1006.9	-137.5	2.1	-559.4	1399.5
8	160	-178.3	-143.8	125.9	-3.3	-213.9	2076.2
	191	933.0	-1677.4	-125.9	3.3	-508.7	2325.1

Comb.	Nodo	N [kg]	T1-2 [kg]	T1-3 [kg]	Mt [kgm]	M1-3 [kgm]	M1-2 [kgm]
9	160	-66.6	-85.3	165.2	-2.1	-277.5	1240.4
	191	821.3	-1007.5	-165.2	2.1	-670.9	1406.3
10	160	-102.5	1.5	40.8	-0.1	-122.4	-7.3
	191	857.3	-1.5	-40.8	0.1	-111.7	15.7
11	160	-5.8	1.5	161.5	-0.2	-265.6	-8.4
	191	760.5	-1.5	-161.5	0.2	-661.2	17.3
12	160	-34.1	-27.4	158.0	-0.8	-261.6	407.8
	191	788.9	-336.8	-158.0	0.8	-645.4	480.1
13	160	-127.8	0.4	89.8	-0.1	-143.3	-3.4
	191	882.5	-0.4	-89.8	0.1	-372.3	5.6
14	160	-19.0	1.6	141.0	-0.2	-243.3	-8.9
	191	773.7	-1.6	-141.0	0.2	-566.0	18.2
15	160	-225.2	-144.4	98.2	-3.3	-166.4	2079.8
	191	980.0	-1676.8	-98.2	3.3	-397.1	2318.3
16	160	-106.8	0.8	164.0	-0.4	-205.9	1.9
	191	861.5	-0.8	-164.0	0.4	-737.1	4.8
17	160	-163.6	9.2	123.9	-0.6	-168.0	41.8
	191	918.4	-9.2	-123.9	0.6	-544.3	28.2
1	66	2206.5	-812.6	-1577.5	-2.5	945.6	-1522.2
	76	-2190.6	812.6	1577.5	2.5	-708.9	1400.3
2	66	2060.6	-1366.3	-1296.4	-4.1	795.5	-2587.9
	76	-2044.7	1366.3	1296.4	4.1	-601.0	2382.9
3	66	2312.9	-808.1	-1971.3	-2.5	1187.8	-1501.5
	76	-2297.0	808.1	1971.3	2.5	-892.1	1380.3
4	66	4396.4	18.6	-4064.3	-0.2	3004.3	65.1
	76	-4380.5	-18.6	4064.3	0.2	-2394.7	-62.3
5	66	-305.5	-14.5	1057.2	-0.1	-1049.9	-83.8
	76	317.7	14.5	-1057.2	0.1	891.4	81.9
6	66	281.2	-36.7	383.1	-0.5	-500.0	-203.0
	76	-268.9	36.7	-383.1	0.5	442.6	198.2
7	66	1647.2	-541.3	-1118.6	-1.7	668.3	-1013.9
	76	-1634.9	541.3	1118.6	1.7	-500.5	932.7
8	66	1549.9	-910.4	-931.2	-2.8	568.3	-1724.3
	76	-1537.6	910.4	931.2	2.8	-428.6	1587.8
9	66	1718.1	-538.3	-1381.1	-1.6	829.8	-1000.1
	76	-1705.9	538.3	1381.1	1.6	-622.7	919.4
10	66	3107.1	12.8	-2776.5	-0.1	2040.8	44.3
	76	-3094.8	-12.8	2776.5	0.1	-1624.4	-42.4
11	66	1761.0	13.7	-1498.9	0.0	884.2	57.6
	76	-1748.7	-13.7	1498.9	-0.0	-659.4	-55.5
12	66	1723.8	-170.7	-1423.3	-0.5	844.8	-296.8
	76	-1711.6	170.7	1423.3	0.5	-631.3	271.2
13	66	1514.6	6.7	-868.3	-0.0	502.4	25.2
	76	-1502.3	-6.7	868.3	0.0	-372.2	-24.2
14	66	2035.2	13.9	-1792.4	-0.0	1139.3	57.0
	76	-2023.0	-13.9	1792.4	0.0	-870.5	-54.9

Comb.	Nodo	N [kg]	T1-2 [kg]	T1-3 [kg]	Mt [kgm]	M1-3 [kgm]	M1-2 [kgm]
15	66	1478.9	-913.4	-668.7	-2.8	406.7	-1738.1
	76	-1466.7	913.4	668.7	2.8	-306.4	1601.1
16	66	-447.5	-16.0	1200.7	-0.1	-1168.6	-94.0
	76	459.8	16.0	-1200.7	0.1	988.6	91.9
17	66	185.6	-39.9	472.4	-0.6	-574.0	-226.3
	76	-173.3	39.9	-472.4	0.6	503.2	221.2
1	76	2138.2	-717.3	-797.9	-2.5	712.3	-1403.8
	97	-2032.3	717.3	797.9	2.5	85.6	686.4
2	76	1992.2	-1206.3	-660.8	-4.4	602.5	-2388.8
	97	-1886.2	1206.3	660.8	4.4	58.3	1182.6
3	76	2244.9	-713.2	-1006.0	-2.5	898.6	-1383.8
	97	-2138.9	713.2	1006.0	2.5	107.4	670.6
4	76	4324.0	15.5	-2453.9	0.2	2430.0	62.5
	97	-4218.1	-15.5	2453.9	-0.2	23.9	-47.0
5	76	-356.6	-14.1	836.9	-0.2	-915.4	-82.0
	97	438.1	14.1	-836.9	0.2	80.0	8.2
6	76	229.1	-35.4	389.7	-0.5	-458.0	-198.6
	97	-147.5	35.4	-389.7	0.5	43.8	149.2
7	76	1594.5	-477.9	-563.9	-1.7	502.4	-935.0
	97	-1513.0	477.9	563.9	1.7	61.5	457.1
8	76	1497.2	-803.8	-472.5	-2.9	429.2	-1591.7
	97	-1415.6	803.8	472.5	2.9	43.4	787.9
9	76	1665.6	-475.1	-702.7	-1.7	626.6	-921.6
	97	-1584.1	475.1	702.7	1.7	76.1	446.5
10	76	3051.7	10.7	-1667.9	0.1	1647.5	42.5
	97	-2970.2	-10.7	1667.9	-0.1	20.4	-31.8
11	76	1708.3	12.4	-756.9	0.1	664.0	55.6
	97	-1626.8	-12.4	756.9	-0.1	92.9	-43.3
12	76	1671.1	-150.5	-720.4	-0.5	635.4	-271.8
	97	-1589.6	150.5	720.4	0.5	85.0	121.4
13	76	1461.4	6.0	-428.1	0.1	371.9	24.3
	97	-1379.9	-6.0	428.1	-0.1	56.1	-18.3
14	76	1982.0	12.4	-959.5	0.1	879.1	55.0
	97	-1900.5	-12.4	959.5	-0.1	80.4	-42.6
15	76	1426.1	-806.6	-333.8	-2.9	304.9	-1605.0
	97	-1344.6	806.6	333.8	2.9	28.8	798.4
16	76	-498.5	-15.5	932.8	-0.2	-1014.3	-92.1
	97	580.0	15.5	-932.8	0.2	84.9	11.2
17	76	133.6	-38.5	449.6	-0.5	-519.8	-221.6
	97	-52.0	38.5	-449.6	0.5	43.9	168.2
1	97	1956.6	-566.4	35.1	-2.5	-60.4	-691.2
	119	-1850.6	566.4	-35.1	2.5	25.3	124.8
2	97	1810.9	-953.9	30.1	-4.4	-37.9	-1190.8
	119	-1704.9	953.9	-30.1	4.4	7.8	236.9
3	97	2063.5	-562.7	34.6	-2.5	-72.6	-675.3

Comb.	Nodo	N [kg]	T1-2 [kg]	T1-3 [kg]	Mt [kgm]	M1-3 [kgm]	M1-2 [kgm]
	119	-1957.5	562.7	-34.6	2.5	37.9	112.7
4	97	4115.1	12.8	-290.8	0.3	122.6	47.2
	119	-4009.1	-12.8	290.8	-0.3	168.2	-34.4
5	97	-480.5	-13.3	245.0	-0.2	-133.9	-8.1
	119	562.1	13.3	-245.0	0.2	-90.9	9.3
6	97	98.2	-33.3	163.6	-0.4	-29.1	-149.4
	119	-16.7	33.3	-163.6	0.4	-50.2	124.3
7	97	1454.4	-377.3	26.2	-1.7	-44.5	-460.3
	119	-1372.9	377.3	-26.2	1.7	18.2	82.9
8	97	1357.3	-635.6	22.9	-2.9	-29.4	-793.3
	119	-1275.7	635.6	-22.9	2.9	6.5	157.7
9	97	1525.7	-374.8	25.9	-1.7	-52.6	-449.7
	119	-1444.2	374.8	-25.9	1.7	26.6	74.9
10	97	2893.4	8.8	-191.0	0.2	77.5	32.0
	119	-2811.9	-8.8	191.0	-0.2	113.5	-23.2
11	97	1567.6	11.2	28.3	0.2	-68.0	43.5
	119	-1486.1	-11.2	-28.3	-0.2	39.7	-32.3
12	97	1530.6	-117.8	27.0	-0.4	-61.3	-122.3
	119	-1449.1	117.8	-27.0	0.4	34.3	4.5
13	97	1319.8	5.5	25.4	0.1	-46.0	18.4
	119	-1238.3	-5.5	-25.4	-0.1	20.5	-12.9
14	97	1837.8	11.1	-15.8	0.2	-39.9	42.8
	119	-1756.3	-11.1	15.8	-0.2	55.7	-31.6
15	97	1286.0	-638.1	23.2	-3.0	-21.3	-803.9
	119	-1204.5	638.1	-23.2	3.0	-1.8	165.8
16	97	-621.1	-14.7	263.0	-0.2	-142.9	-11.2
	119	702.6	14.7	-263.0	0.2	-99.7	12.2
17	97	3.5	-36.3	175.0	-0.4	-28.4	-168.4
	119	78.0	36.3	-175.0	0.4	-55.6	141.2
1	119	1775.2	-436.1	65.1	-2.0	-2.8	-129.7
	140	-1669.2	436.1	-65.1	2.0	-62.3	-306.4
2	119	1629.9	-736.2	37.4	-3.5	11.9	-245.4
	140	-1523.9	736.2	-37.4	3.5	-49.3	-490.8
3	119	1882.4	-432.9	89.1	-1.9	-6.5	-117.6
	140	-1776.4	432.9	-89.1	1.9	-82.6	-315.3
4	119	3906.9	10.6	49.4	0.3	-21.1	34.6
	140	-3800.9	-10.6	-49.4	-0.3	-28.3	-24.1
5	119	-604.7	0.3	40.8	-0.1	21.7	-9.2
	140	686.2	-0.3	-40.8	0.1	-46.6	10.3
6	119	-32.7	-27.4	24.5	-0.3	6.8	-124.3
	140	114.3	27.4	-24.5	0.3	-13.4	101.2
7	119	1314.5	-290.5	46.2	-1.3	-3.2	-86.2
	140	-1233.0	290.5	-46.2	1.3	-43.0	-204.2
8	119	1217.6	-490.5	27.7	-2.4	6.7	-163.4
	140	-1136.1	490.5	-27.7	2.4	-34.4	-327.2
9	119	1386.0	-288.3	62.2	-1.3	-5.6	-78.1

Comb.	Nodo	N [kg]	T1-2 [kg]	T1-3 [kg]	Mt [kgm]	M1-3 [kgm]	M1-2 [kgm]
	140	-1304.4	288.3	-62.2	1.3	-56.5	-210.1
10	119	2735.6	7.3	35.7	0.2	-15.3	23.3
	140	-2654.1	-7.3	-35.7	-0.2	-20.4	-16.0
11	119	1426.9	10.5	80.4	0.3	-18.9	32.5
	140	-1345.4	-10.5	-80.4	-0.3	-61.5	-22.1
12	119	1390.1	-89.4	72.2	-0.3	-14.1	-5.5
	140	-1308.6	89.4	-72.2	0.3	-58.1	-83.9
13	119	1178.2	5.2	42.5	0.1	-13.0	13.1
	140	-1096.7	-5.2	-42.5	-0.1	-29.5	-7.9
14	119	1693.7	10.2	73.8	0.2	-18.5	31.9
	140	-1612.2	-10.2	-73.8	-0.2	-55.3	-21.7
15	119	1146.2	-492.7	11.7	-2.4	9.1	-171.4
	140	-1064.7	492.7	-11.7	2.4	-20.8	-321.3
16	119	-743.8	0.0	42.2	-0.1	26.7	-12.1
	140	825.3	-0.0	-42.2	0.1	-49.5	13.0
17	119	-126.5	-30.1	23.9	-0.3	9.4	-141.3
	140	208.0	30.1	-23.9	0.3	-13.0	116.0
1	140	1626.2	-411.6	-40.5	1.0	87.1	302.2
	208	-384.6	-847.1	40.5	-1.0	206.7	1278.6
2	140	1481.6	-695.6	-34.2	1.4	71.7	483.5
	208	-239.9	-1402.1	34.2	-1.4	176.6	2081.3
3	140	1733.5	-409.0	-53.9	1.0	117.1	311.1
	208	-491.9	-849.6	53.9	-1.0	274.0	1288.4
4	140	3732.7	8.7	-106.8	0.3	175.9	24.2
	208	-2491.0	-8.7	106.8	-0.3	599.8	39.1
5	140	-705.4	2.0	32.3	-0.1	-34.4	-10.2
	208	1660.5	-2.0	-32.3	0.1	-201.9	32.7
6	140	-139.8	-13.8	13.3	-0.2	-4.6	-101.2
	208	1094.9	13.8	-13.3	0.2	-93.2	0.1
7	140	1199.5	-274.1	-27.8	0.6	59.6	201.4
	208	-244.4	-565.0	27.8	-0.6	142.1	854.6
8	140	1103.1	-463.4	-23.6	0.9	49.3	322.3
	208	-148.0	-935.1	23.6	-0.9	122.1	1389.8
9	140	1271.1	-272.4	-36.7	0.7	79.6	207.3
	208	-316.0	-566.7	36.7	-0.7	187.0	861.2
10	140	2603.8	6.1	-72.0	0.2	118.8	16.1
	208	-1648.7	-6.1	72.0	-0.2	404.2	28.3
11	140	1311.0	10.1	-38.1	0.2	83.8	22.3
	208	-355.9	-10.1	38.1	-0.2	192.7	51.2
12	140	1274.4	-84.4	-36.5	0.4	79.9	83.1
	208	-319.3	-195.3	36.5	-0.4	185.3	319.6
13	140	1061.5	5.4	-17.5	0.1	37.4	8.0
	208	-106.4	-5.4	17.5	-0.1	89.4	31.2
14	140	1574.6	9.5	-46.2	0.2	93.8	21.9
	208	-619.5	-9.5	46.2	-0.2	241.8	47.3
15	140	1031.5	-465.1	-14.7	0.9	29.4	316.4

Comb.	Nodo	N [kg]	T1-2 [kg]	T1-3 [kg]	Mt [kgm]	M1-3 [kgm]	M1-2 [kgm]
	208	-76.4	-933.3	14.7	-0.9	77.2	1383.2
16	140	-843.3	1.5	36.5	-0.1	-41.3	-12.9
	208	1798.4	-1.5	-36.5	0.1	-225.7	33.0
17	140	-232.8	-16.3	15.6	-0.3	-7.9	-116.0
	208	1187.9	16.3	-15.6	0.3	-106.8	-3.5
1	67	4477.0	-962.9	362.6	-0.0	-352.6	-1582.2
	77	-4461.1	962.9	-362.6	0.0	298.2	1437.8
2	67	3789.6	-1621.3	387.9	-0.1	-361.8	-2726.3
	77	-3773.7	1621.3	-387.9	0.1	303.6	2483.1
3	67	5642.6	-958.5	350.1	-0.0	-349.4	-1552.5
	77	-5626.7	958.5	-350.1	0.0	296.9	1408.7
4	67	4213.9	19.2	-2023.4	-0.1	2015.5	107.8
	77	-4198.0	-19.2	2023.4	0.1	-1712.0	-105.0
5	67	1670.1	4.2	1800.7	0.0	-1789.7	-56.9
	77	-1657.9	-4.2	-1800.7	-0.0	1519.6	55.0
6	67	1655.2	-33.9	1167.9	-0.3	-1176.2	-171.8
	77	-1643.0	33.9	-1167.9	0.3	1001.0	166.6
7	67	3119.4	-641.2	263.6	-0.0	-255.8	-1051.4
	77	-3107.2	641.2	-263.6	0.0	216.2	955.2
8	67	2661.1	-1080.2	280.5	-0.1	-261.9	-1814.2
	77	-2648.9	1080.2	-280.5	0.1	219.8	1652.1
9	67	3896.5	-638.3	255.3	-0.0	-253.7	-1031.6
	77	-3884.3	638.3	-255.3	0.0	215.4	935.9
10	67	2944.0	13.5	-1327.0	-0.1	1323.0	75.3
	77	-2931.8	-13.5	1327.0	0.1	-1123.9	-73.3
11	67	4064.8	17.9	208.8	0.0	-220.5	100.3
	77	-4052.5	-17.9	-208.8	-0.0	189.2	-97.6
12	67	3893.3	-201.3	219.6	0.0	-226.2	-279.7
	77	-3881.1	201.3	-219.6	-0.0	193.3	249.5
13	67	2152.3	10.2	194.9	0.0	-192.9	52.9
	77	-2140.1	-10.2	-194.9	-0.0	163.7	-51.3
14	67	3949.9	17.4	-101.9	0.0	90.7	98.2
	77	-3937.7	-17.4	101.9	-0.0	-75.5	-95.6
15	67	1884.1	-1083.1	288.8	-0.1	-264.0	-1834.0
	77	-1871.9	1083.1	-288.8	0.1	220.7	1671.5
16	67	1667.5	3.8	1931.9	0.0	-1920.4	-66.6
	77	-1655.2	-3.8	-1931.9	-0.0	1630.6	64.5
17	67	1650.5	-37.1	1247.3	-0.3	-1256.7	-194.7
	77	-1638.3	37.1	-1247.3	0.3	1069.6	189.2
1	77	4437.8	-862.2	300.0	-0.1	-304.1	-1441.2
	98	-4331.8	862.2	-300.0	0.1	4.1	578.9
2	77	3748.5	-1453.8	315.2	-0.2	-309.7	-2489.0
	98	-3642.5	1453.8	-315.2	0.2	-5.5	1035.2
3	77	5606.6	-857.7	296.1	-0.1	-302.9	-1412.0
	98	-5500.6	857.7	-296.1	0.1	6.8	554.3

Comb.	Nodo	N [kg]	T1-2 [kg]	T1-3 [kg]	Mt [kgm]	M1-3 [kgm]	M1-2 [kgm]
4	77	4173.9	19.1	-1609.9	0.1	1746.0	105.2
	98	-4067.9	-19.1	1609.9	-0.1	-136.2	-86.1
5	77	1635.0	4.4	1449.2	-0.2	-1549.8	-55.1
	98	-1553.5	-4.4	-1449.2	0.2	80.1	43.6
6	77	1620.2	-32.1	951.9	-0.4	-1020.9	-167.0
	98	-1538.7	32.1	-951.9	0.4	-5.8	134.6
7	77	3088.4	-574.1	217.2	-0.1	-220.5	-957.5
	98	-3006.9	574.1	-217.2	0.1	3.3	383.4
8	77	2628.8	-968.5	227.4	-0.1	-224.2	-1656.0
	98	-2547.3	968.5	-227.4	0.1	-3.1	687.6
9	77	3867.6	-571.1	214.6	-0.1	-219.7	-938.1
	98	-3786.1	571.1	-214.6	0.1	5.1	367.0
10	77	2912.4	13.5	-1056.0	0.0	1146.2	73.5
	98	-2830.9	-13.5	1056.0	-0.0	-90.2	-60.0
11	77	4036.2	18.2	180.0	0.0	-193.0	97.9
	98	-3954.7	-18.2	-180.0	-0.0	13.0	-79.7
12	77	3864.3	-178.7	187.2	-0.0	-197.2	-250.1
	98	-3782.8	178.7	-187.2	0.0	10.0	71.3
13	77	2118.5	10.4	159.1	-0.0	-166.9	51.5
	98	-2036.9	-10.4	-159.1	0.0	7.8	-41.1
14	77	3921.0	17.6	-69.5	0.0	76.9	95.8
	98	-3839.5	-17.6	69.5	-0.0	-7.4	-78.2
15	77	1849.6	-971.5	230.0	-0.1	-225.1	-1675.5
	98	-1768.1	971.5	-230.0	0.1	-4.9	704.0
16	77	1632.3	4.1	1554.2	-0.2	-1663.1	-64.6
	98	-1550.8	-4.1	-1554.2	0.2	87.1	51.8
17	77	1615.5	-35.1	1016.6	-0.4	-1090.9	-189.5
	98	-1533.9	35.1	-1016.6	0.4	-6.6	154.7
1	98	4301.3	-678.8	60.4	-0.1	-26.4	-582.4
	120	-4195.3	678.8	-60.4	0.1	-34.0	-96.4
2	98	3607.9	-1148.3	58.6	-0.1	-16.5	-1041.3
	120	-3501.9	1148.3	-58.6	0.1	-42.1	-106.9
3	98	5477.5	-674.1	62.9	-0.1	-29.4	-557.6
	120	-5371.5	674.1	-62.9	0.1	-33.5	-116.5
4	98	4034.7	19.2	-435.7	0.1	271.5	86.6
	120	-3928.8	-19.2	435.7	-0.1	164.3	-67.4
5	98	1518.4	4.8	366.7	-0.2	-175.3	-43.6
	120	-1436.8	-4.8	-366.7	0.2	-149.2	34.7
6	98	1503.6	-28.1	242.6	-0.4	3.0	-134.8
	120	-1422.1	28.1	-242.6	0.4	-96.1	107.4
7	98	2981.2	-451.8	43.4	-0.1	-19.5	-385.7
	120	-2899.7	451.8	-43.4	0.1	-23.9	-66.1
8	98	2518.9	-764.8	42.2	-0.1	-12.9	-691.7
	120	-2437.4	764.8	-42.2	0.1	-29.3	-73.1
9	98	3765.3	-448.7	45.0	-0.1	-21.5	-369.2
	120	-3683.8	448.7	-45.0	0.1	-23.6	-79.5

Comb.	Nodo	N [kg]	T1-2 [kg]	T1-3 [kg]	Mt [kgm]	M1-3 [kgm]	M1-2 [kgm]
10	98	2803.5	13.5	-287.4	0.0	179.1	60.3
	120	-2722.0	-13.5	287.4	-0.0	108.3	-46.8
11	98	3934.6	18.5	41.6	-0.0	-27.9	80.2
	120	-3853.1	-18.5	-41.6	0.0	-13.7	-61.6
12	98	3761.7	-137.7	41.6	-0.0	-25.0	-71.8
	120	-3680.2	137.7	-41.6	0.0	-16.6	-66.0
13	98	2004.5	10.5	32.3	-0.0	-20.3	41.3
	120	-1923.0	-10.5	-32.3	0.0	-12.0	-30.8
14	98	3818.7	17.9	-24.3	0.0	13.4	78.6
	120	-3737.1	-17.9	24.3	-0.0	10.9	-60.7
15	98	1734.8	-767.9	40.6	-0.1	-10.9	-708.1
	120	-1653.2	767.9	-40.6	0.1	-29.6	-59.7
16	98	1515.6	4.4	394.0	-0.2	-188.9	-51.8
	120	-1434.1	-4.4	-394.0	0.2	-160.3	41.7
17	98	1498.8	-31.0	259.9	-0.4	4.6	-154.9
	120	-1417.3	31.0	-259.9	0.4	-102.9	125.1
1	120	4162.9	-483.8	-30.2	-0.1	12.4	93.6
	141	-4056.9	483.8	30.2	0.1	17.8	-577.4
2	120	3465.8	-823.6	-37.5	-0.1	21.8	101.7
	141	-3359.8	823.6	37.5	0.1	15.8	-925.3
3	120	5346.2	-478.8	-28.6	-0.0	11.6	113.9
	141	-5240.2	478.8	28.6	0.0	17.0	-592.7
4	120	3893.2	19.4	-8.6	0.1	-23.9	68.1
	141	-3787.2	-19.4	8.6	-0.1	32.5	-48.6
5	120	1401.0	5.2	-30.3	-0.2	37.1	-34.6
	141	-1319.5	-5.2	30.3	0.2	-3.1	28.8
6	120	1385.9	-23.5	-22.3	-0.4	19.7	-107.5
	141	-1304.4	23.5	22.3	0.4	19.0	86.2
7	120	2872.6	-321.8	-21.9	-0.0	8.2	64.3
	141	-2791.1	321.8	21.9	0.0	13.7	-386.0
8	120	2407.8	-548.3	-26.8	-0.1	14.4	69.7
	141	-2326.3	548.3	26.8	0.1	12.4	-618.0
9	120	3661.4	-318.5	-20.8	-0.0	7.6	77.8
	141	-3579.9	318.5	20.8	0.0	13.2	-396.2
10	120	2692.8	13.7	-7.5	0.0	-16.0	47.2
	141	-2611.3	-13.7	7.5	-0.0	23.5	-33.5
11	120	3831.2	19.0	-12.8	-0.0	-1.8	62.3
	141	-3749.7	-19.0	12.8	0.0	14.6	-43.3
12	120	3657.4	-94.0	-15.3	-0.0	1.4	65.8
	141	-3575.9	94.0	15.3	0.0	14.0	-159.8
13	120	1889.3	10.7	-13.7	-0.0	-0.9	31.2
	141	-1807.8	-10.7	13.7	0.0	14.6	-20.4
14	120	3714.4	18.4	-11.5	0.0	-4.7	61.3
	141	-3632.9	-18.4	11.5	-0.0	16.2	-42.9
15	120	1619.0	-551.6	-27.8	-0.1	15.0	56.2
	141	-1537.4	551.6	27.8	0.1	12.9	-607.8

Comb.	Nodo	N [kg]	T1-2 [kg]	T1-3 [kg]	Mt [kgm]	M1-3 [kgm]	M1-2 [kgm]
16	120	1398.3	4.8	-31.9	-0.2	42.1	-41.5
	141	-1316.8	-4.8	31.9	0.2	-6.2	-32.3
17	120	1381.1	-26.3	-23.2	-0.4	22.3	-125.2
	141	-1299.5	26.3	23.2	0.4	19.0	-121.7
1	141	4058.8	-364.6	18.3	0.1	-39.6	575.8
	209	-2818.1	-891.5	-18.3	-0.1	-93.6	1336.7
2	141	3357.7	-625.7	16.8	0.1	-35.7	921.9
	209	-2117.0	-1467.9	-16.8	-0.1	-86.0	2135.4
3	141	5249.8	-359.2	18.2	0.1	-39.1	591.3
	209	-4009.1	-896.9	-18.2	-0.1	-92.9	1360.8
4	141	3785.7	20.1	-75.9	0.1	104.3	49.4
	209	-2545.1	-20.1	75.9	-0.1	446.7	96.8
5	141	1309.9	6.1	75.5	-0.2	-124.9	-28.6
	209	-355.5	-6.1	-75.5	0.2	-423.9	49.0
6	141	1294.5	-7.7	50.1	-0.3	-83.0	-86.1
	209	-340.1	7.7	-50.1	0.3	-281.3	21.9
7	141	2790.3	-242.3	13.6	0.0	-29.7	385.0
	209	-1835.9	-595.1	-13.6	-0.0	-69.4	895.5
8	141	2322.8	-416.3	12.6	0.1	-27.1	615.7
	209	-1368.5	-979.3	-12.6	-0.1	-64.3	1428.0
9	141	3584.3	-238.7	13.5	0.0	-29.4	395.3
	209	-2629.9	-598.7	-13.5	-0.0	-68.9	911.6
10	141	2608.2	14.2	-49.2	0.1	66.2	34.0
	209	-1653.9	-14.2	49.2	-0.1	290.8	68.9
11	141	3754.6	19.9	13.9	0.0	-30.9	44.0
	209	-2800.2	-19.9	-13.9	-0.0	-70.1	100.7
12	141	3579.8	-66.8	13.5	0.0	-29.9	160.0
	209	-2625.5	-212.3	-13.5	-0.0	-68.2	368.3
13	141	1800.0	11.0	12.5	-0.0	-28.3	20.9
	209	-845.6	-11.0	-12.5	0.0	-62.5	59.1
14	141	3636.9	19.3	1.2	0.0	-11.2	43.6
	209	-2682.5	-19.3	-1.2	-0.0	2.8	96.4
15	141	1528.9	-420.0	12.7	0.1	-27.4	605.4
	209	-574.5	-975.7	-12.7	-0.1	-64.7	1411.9
16	141	1307.1	5.5	81.1	-0.2	-134.4	32.7
	209	-352.7	-5.5	-81.1	0.2	-455.3	48.6
17	141	1289.3	-10.2	53.4	-0.3	-88.1	122.4
	209	-335.0	10.2	-53.4	0.3	-300.0	18.1
1	68	2873.1	-817.4	2372.7	1.9	-1562.3	-1432.5
	78	-2857.2	817.4	-2372.7	-1.9	1206.4	1309.9
2	68	2714.4	-1371.5	2128.8	3.2	-1416.3	-2434.9
	78	-2698.5	1371.5	-2128.8	-3.2	1097.0	2229.2
3	68	3305.9	-814.5	2811.1	1.9	-1832.7	-1413.4
	78	-3290.0	814.5	-2811.1	-1.9	1411.1	1291.2
4	68	801.9	1.7	-191.9	-0.2	612.5	60.7

Comb.	Nodo	N [kg]	T1-2 [kg]	T1-3 [kg]	Mt [kgm]	M1-3 [kgm]	M1-2 [kgm]
	78	-786.0	-1.7	191.9	0.2	-583.7	-60.4
5	68	2372.7	0.8	2703.0	0.0	-2116.8	-77.4
	78	-2360.5	-0.8	-2703.0	-0.0	1711.4	75.2
6	68	1298.4	-37.3	2071.8	-0.3	-1582.6	-189.6
	78	-1286.2	37.3	-2071.8	0.3	1271.9	184.2
7	68	2070.5	-544.5	1684.5	1.3	-1110.5	-952.8
	78	-2058.3	544.5	-1684.5	-1.3	857.8	871.1
8	68	1964.7	-913.8	1521.9	2.1	-1013.1	-1621.0
	78	-1952.5	913.8	-1521.9	-2.1	784.8	1484.0
9	68	2359.0	-542.6	1976.8	1.3	-1290.7	-940.0
	78	-2346.8	542.6	-1976.8	-1.3	994.2	858.6
10	68	689.7	1.6	-25.2	-0.1	339.4	42.7
	78	-677.5	-1.6	25.2	0.1	-335.7	-42.4
11	68	2317.9	10.4	1998.1	-0.0	-1292.9	57.2
	78	-2305.7	-10.4	-1998.1	0.0	993.2	-55.6
12	68	2287.2	-174.1	1941.6	0.4	-1260.2	-276.4
	78	-2275.0	174.1	-1941.6	-0.4	969.0	250.2
13	68	1598.7	6.0	1243.6	-0.0	-819.1	30.1
	78	-1586.5	-6.0	-1243.6	0.0	632.6	-29.2
14	68	2032.2	9.0	1632.1	-0.0	-989.7	56.4
	78	-2020.0	-9.0	-1632.1	0.0	744.9	-55.0
15	68	1676.2	-915.7	1229.7	2.1	-832.9	-1633.8
	78	-1664.0	915.7	-1229.7	-2.1	648.4	1496.4
16	68	2450.0	0.5	2835.1	0.0	-2231.1	-87.2
	78	-2437.7	-0.5	-2835.1	-0.0	1805.9	84.9
17	68	1287.5	-40.5	2153.2	-0.3	-1653.6	-212.4
	78	-1275.3	40.5	-2153.2	0.3	1330.7	206.7
1	78	2803.5	-720.1	1319.2	2.1	-1219.2	-1313.2
	99	-2697.5	720.1	-1319.2	-2.1	-100.0	593.1
2	78	2644.4	-1208.5	1199.7	3.6	-1108.0	-2234.8
	99	-2538.4	1208.5	-1199.7	-3.6	-91.8	1026.3
3	78	3236.9	-717.4	1548.5	2.1	-1427.4	-1294.5
	99	-3130.9	717.4	-1548.5	-2.1	-121.0	577.1
4	78	736.1	4.0	-419.8	-0.1	604.7	60.5
	99	-630.2	-4.0	419.8	0.1	-184.9	-56.5
5	78	2316.1	0.6	1713.9	-0.1	-1736.7	-75.4
	99	-2234.6	-0.6	-1713.9	0.1	27.7	61.6
6	78	1244.0	-35.0	1286.0	0.1	-1288.9	-184.6
	99	-1162.5	35.0	-1286.0	-0.1	4.8	150.9
7	78	2016.8	-479.6	936.9	1.4	-866.4	-873.3
	99	-1935.3	479.6	-936.9	-1.4	-70.4	393.7
8	78	1910.8	-805.3	857.2	2.4	-792.3	-1487.7
	99	-1829.2	805.3	-857.2	-2.4	-65.0	682.5
9	78	2305.8	-477.8	1089.7	1.4	-1005.2	-860.8
	99	-2224.2	477.8	-1089.7	-1.4	-84.5	383.0
10	78	638.6	3.1	-222.4	-0.1	349.5	42.5

Comb.	Nodo	N [kg]	T1-2 [kg]	T1-3 [kg]	Mt [kgm]	M1-3 [kgm]	M1-2 [kgm]
	99	-557.1	-3.1	222.4	0.1	-127.1	-39.4
11	78	2264.7	9.6	1087.6	-0.1	-1004.2	55.7
	99	-2183.2	-9.6	-1087.6	0.1	-83.4	-46.1
12	78	2233.9	-153.1	1061.3	0.4	-979.5	-250.9
	99	-2152.4	153.1	-1061.3	-0.4	-81.7	97.8
13	78	1544.5	5.5	686.3	-0.1	-637.3	29.3
	99	-1462.9	-5.5	-686.3	0.1	-49.0	-23.8
14	78	1979.5	8.6	845.3	-0.1	-751.2	55.2
	99	-1898.0	-8.6	-845.3	0.1	-94.1	-46.6
15	78	1621.8	-807.1	704.4	2.4	-653.5	-1500.2
	99	-1540.3	807.1	-704.4	-2.4	-50.9	693.2
16	78	2393.2	0.3	1804.4	-0.3	-1833.0	-85.0
	99	-2311.7	-0.3	-1804.4	0.3	35.0	70.1
17	78	1233.1	-38.0	1342.1	-0.4	-1348.7	-207.1
	99	-1151.6	38.0	-1342.1	0.4	9.1	171.6
1	99	2613.3	-565.4	39.1	2.3	40.8	-597.9
	121	-2507.3	565.4	-39.1	-2.3	-79.9	32.5
2	99	2453.8	-950.5	38.9	3.9	38.7	-1034.3
	121	-2347.9	950.5	-38.9	-3.9	-77.6	83.9
3	99	3047.6	-562.7	41.3	2.2	50.9	-581.8
	121	-2941.6	562.7	-41.3	-2.2	-92.2	19.1
4	99	571.8	6.7	-312.5	-0.1	255.2	56.6
	121	-465.9	-6.7	312.5	0.1	57.2	-49.9
5	99	2156.0	1.0	254.7	-0.1	-135.1	-61.7
	121	-2074.4	-1.0	-254.7	0.1	-124.5	49.5
6	99	1098.5	-31.1	167.0	0.1	-81.6	-151.2
	121	-1017.0	31.1	-167.0	-0.1	-87.4	122.0
7	99	1870.5	-376.5	27.4	1.5	28.9	-396.9
	121	-1788.9	376.5	-27.4	-1.5	-56.3	20.3
8	99	1764.2	-633.2	27.3	2.6	27.4	-687.8
	121	-1682.6	633.2	-27.3	-2.6	-54.8	54.6
9	99	2160.0	-374.7	28.9	1.5	35.6	-386.1
	121	-2078.5	374.7	-28.9	-1.5	-64.5	11.4
10	99	509.5	4.9	-207.0	-0.1	171.8	39.5
	121	-428.0	-4.9	207.0	0.1	35.1	-34.6
11	99	2119.3	9.4	25.0	-0.2	34.6	46.2
	121	-2037.7	-9.4	-25.0	0.2	-59.6	-36.9
12	99	2088.3	-118.9	25.4	0.4	34.3	-98.8
	121	-2006.8	118.9	-25.4	-0.4	-59.7	-20.1
13	99	1398.0	5.3	17.4	-0.1	20.0	23.8
	121	-1316.5	-5.3	-17.4	0.1	-37.4	-18.5
14	99	1837.4	8.8	-21.5	-0.2	63.2	46.7
	121	-1755.9	-8.8	21.5	0.2	-41.7	-37.9
15	99	1474.6	-635.0	25.8	2.6	20.7	-698.6
	121	-1393.1	635.0	-25.8	-2.6	-46.6	63.5
16	99	2232.1	0.8	274.3	-0.3	-148.7	-70.3

Comb.	Nodo	N [kg]	T1-2 [kg]	T1-3 [kg]	Mt [kgm]	M1-3 [kgm]	M1-2 [kgm]
	121	-2150.5	-0.8	-274.3	0.3	-132.1	57.0
17	99	1087.7	-33.9	179.4	-0.4	-90.0	-171.9
	121	-1006.2	33.9	-179.4	0.4	-91.9	140.8
1	121	2423.6	-430.2	-123.4	1.9	24.8	-37.5
	142	-2317.7	430.2	123.4	-1.9	98.6	-392.6
2	121	2263.9	-725.4	-108.6	3.3	28.8	-92.3
	142	-2157.9	725.4	108.6	-3.3	79.8	-633.0
3	121	2858.9	-427.4	-144.8	1.8	26.7	-24.1
	142	-2752.9	427.4	144.8	-1.8	118.1	-403.3
4	121	406.7	9.9	-150.8	-0.2	22.8	50.0
	142	-300.7	-9.9	150.8	0.2	128.0	-40.2
5	121	1996.5	1.9	-49.1	-0.3	35.9	-49.6
	142	-1915.0	-1.9	49.1	0.3	31.6	39.4
6	121	952.9	-27.1	-70.5	-0.4	22.5	-122.2
	142	-871.4	27.1	70.5	0.4	57.0	97.8
7	121	1724.4	-286.3	-88.5	1.2	17.6	-23.7
	142	-1642.9	286.3	88.5	-1.2	70.9	-262.6
8	121	1617.9	-483.1	-78.6	2.2	20.3	-60.2
	142	-1536.4	483.1	78.6	-2.2	58.4	-422.9
9	121	2014.6	-284.5	-102.8	1.2	18.9	-14.7
	142	-1933.1	284.5	102.8	-1.2	83.9	-269.8
10	121	379.8	7.0	-106.8	-0.1	16.3	34.7
	142	-298.3	-7.0	106.8	0.1	90.5	-27.7
11	121	1974.0	9.7	-106.8	-0.2	13.7	36.9
	142	-1892.5	-9.7	106.8	0.2	93.0	-27.2
12	121	1943.0	-88.6	-103.0	0.2	15.2	19.0
	142	-1861.5	88.6	103.0	-0.2	87.9	-107.6
13	121	1251.6	5.6	-69.9	-0.1	10.3	18.6
	142	-1170.1	-5.6	69.9	0.1	59.7	-13.0
14	121	1695.4	9.5	-108.7	-0.2	14.4	38.0
	142	-1613.9	-9.5	108.7	0.2	94.3	-28.5
15	121	1327.8	-485.0	-64.3	2.2	19.0	-69.2
	142	-1246.3	485.0	64.3	-2.2	45.3	-415.8
16	121	2071.7	1.6	-47.7	-0.3	41.1	-57.1
	142	-1990.2	-1.6	47.7	0.3	28.6	-25.0
17	121	942.3	-29.8	-71.1	-0.5	24.9	-141.0
	142	-860.7	29.8	71.1	0.5	57.3	-121.7
1	142	2266.4	-400.0	71.6	-0.7	-156.8	388.3
	210	-1025.4	-857.0	-71.6	0.7	-363.3	1270.7
2	142	2106.5	-675.8	60.8	-1.0	-130.7	625.8
	210	-865.5	-1419.2	-60.8	1.0	-310.6	2072.7
3	142	2702.6	-397.1	85.5	-0.8	-187.7	399.0
	210	-1461.6	-859.9	-85.5	0.8	-433.2	1280.9
4	142	272.0	13.5	-3.6	-0.1	-51.9	40.3
	210	969.0	-13.5	3.6	0.1	78.1	57.3

Comb.	Nodo	N [kg]	T1-2 [kg]	T1-3 [kg]	Mt [kgm]	M1-3 [kgm]	M1-2 [kgm]
5	142	1863.3	-3.5	84.7	-0.3	-150.8	-39.5
	210	-908.7	3.5	-84.7	0.3	-465.6	13.0
6	142	831.5	-13.4	64.5	-0.4	-118.7	-97.8
	210	123.1	13.4	-64.5	0.4	-350.5	-1.2
7	142	1603.3	-266.1	51.0	-0.5	-111.9	259.8
	210	-648.7	-571.8	-51.0	0.5	-258.2	849.9
8	142	1496.7	-450.0	43.7	-0.7	-94.4	418.1
	210	-542.1	-946.6	-43.7	0.7	-223.1	1384.7
9	142	1894.1	-264.2	60.2	-0.5	-132.4	266.9
	210	-939.5	-573.8	-60.2	0.5	-304.8	856.8
10	142	273.8	9.5	0.8	-0.1	-41.9	27.8
	210	680.9	-9.5	-0.8	0.1	36.1	41.1
11	142	1853.6	10.6	63.8	-0.2	-142.5	27.3
	210	-899.0	-10.6	-63.8	0.2	-320.4	49.6
12	142	1822.6	-81.2	61.0	-0.3	-135.6	106.7
	210	-868.0	-198.1	-61.0	0.3	-307.0	317.5
13	142	1130.0	6.2	39.5	-0.1	-88.9	13.1
	210	-175.4	-6.2	-39.5	0.1	-198.0	32.1
14	142	1578.0	10.7	52.4	-0.2	-125.1	28.6
	210	-623.4	-10.7	-52.4	0.2	-255.1	48.8
15	142	1205.9	-451.9	34.5	-0.7	-73.9	410.9
	210	-251.3	-944.7	-34.5	0.7	-176.5	1377.8
16	142	1937.5	-4.6	89.3	-0.3	-158.7	25.0
	210	-982.9	4.6	-89.3	0.3	-491.7	11.4
17	142	820.9	-16.1	67.2	-0.4	-122.9	121.9
	210	133.7	16.1	-67.2	0.4	-366.1	-4.6
1	70	2093.0	-737.8	-482.5	0.0	262.8	-1449.5
	80	-2077.1	737.8	482.5	-0.0	-190.4	1338.8
2	70	2031.0	-1233.5	-557.0	0.0	312.9	-2415.9
	80	-2015.1	1233.5	557.0	-0.0	-229.4	2230.9
3	70	2196.2	-737.1	-463.3	0.1	243.4	-1441.5
	80	-2180.3	737.1	463.3	-0.1	-173.9	1331.0
4	70	1736.4	5.5	-4508.7	-0.1	2781.0	9.1
	80	-1720.5	-5.5	4508.7	0.1	-2104.7	-8.2
5	70	1660.9	0.8	1834.5	0.0	-1165.2	-19.8
	80	-1648.7	-0.8	-1834.5	-0.0	890.1	20.3
6	70	1546.5	-44.6	-548.5	-0.3	330.4	-194.9
	80	-1534.2	44.6	548.5	0.3	-248.2	189.5
7	70	1579.6	-491.3	-366.9	0.0	201.6	-966.6
	80	-1567.4	491.3	366.9	-0.0	-146.6	892.9
8	70	1538.3	-821.8	-416.5	0.0	235.0	-1610.9
	80	-1526.1	821.8	416.5	-0.0	-172.5	1487.6
9	70	1648.4	-490.9	-354.0	0.0	188.7	-961.3
	80	-1636.2	490.9	354.0	-0.0	-135.6	887.7
10	70	1341.9	4.2	-3051.0	-0.0	1880.4	5.8
	80	-1329.7	-4.2	3051.0	0.0	-1422.8	-5.1

Comb.	Nodo	N [kg]	T1-2 [kg]	T1-3 [kg]	Mt [kgm]	M1-3 [kgm]	M1-2 [kgm]
11	70	1661.3	4.8	-288.3	0.1	147.2	6.0
	80	-1649.0	-4.8	288.3	-0.1	-104.0	-5.3
12	70	1646.1	-160.4	-312.1	0.1	163.0	-316.2
	80	-1633.8	160.4	312.1	-0.1	-116.1	292.2
13	70	1488.0	4.2	-320.0	0.0	179.1	-1.4
	80	-1475.7	-4.2	320.0	-0.0	-131.1	2.0
14	70	1606.8	4.8	-839.0	0.0	492.0	7.1
	80	-1594.6	-4.8	839.0	-0.0	-366.2	-6.4
15	70	1469.5	-822.2	-429.4	-0.0	248.0	-1616.2
	80	-1457.3	822.2	429.4	0.0	-183.5	1492.8
16	70	1679.4	0.6	2007.9	0.0	-1274.1	-22.7
	80	-1667.2	-0.6	-2007.9	-0.0	973.0	23.2
17	70	1555.7	-48.4	-566.8	-0.3	342.2	-215.9
	80	-1543.5	48.4	566.8	0.3	-257.2	210.3
1	80	2003.7	-646.0	-248.0	0.1	193.5	-1342.7
	101	-1897.7	646.0	248.0	-0.1	54.4	696.7
2	80	1941.9	-1079.5	-288.2	0.2	233.1	-2237.3
	101	-1835.9	1079.5	288.2	-0.2	55.1	1157.7
3	80	2107.0	-645.4	-236.3	0.1	176.7	-1334.8
	101	-2001.0	645.4	236.3	-0.1	59.6	689.4
4	80	1646.7	4.4	-2361.7	0.2	2140.6	8.2
	101	-1540.8	-4.4	2361.7	-0.2	221.1	-3.8
5	80	1592.0	0.1	966.3	-0.2	-905.4	-20.3
	101	-1510.5	-0.1	-966.3	0.2	-64.4	86.7
6	80	1477.5	-42.4	-287.0	-0.3	252.4	-189.9
	101	-1396.0	42.4	287.0	0.3	34.4	175.9
7	80	1510.9	-430.2	-188.8	0.1	149.0	-895.5
	101	-1429.3	430.2	188.8	-0.1	39.8	465.2
8	80	1469.6	-719.3	-215.7	0.1	175.4	-1491.9
	101	-1388.1	719.3	215.7	-0.1	40.3	772.6
9	80	1579.7	-429.8	-181.1	0.1	137.8	-890.2
	101	-1498.2	429.8	181.1	-0.1	43.3	460.4
10	80	1272.9	3.4	-1598.0	0.1	1447.1	5.1
	101	-1191.4	-3.4	1598.0	-0.1	150.9	-1.8
11	80	1592.4	3.8	-145.9	0.0	105.7	5.3
	101	-1510.9	-3.8	145.9	-0.0	40.2	-1.5
12	80	1577.3	-140.8	-158.8	0.1	118.1	-293.0
	101	-1495.8	140.8	158.8	-0.1	40.7	152.3
13	80	1419.0	3.2	-165.0	0.0	133.3	-2.0
	101	-1337.5	-3.2	165.0	-0.0	31.7	5.2
14	80	1537.9	3.8	-435.3	0.1	372.4	6.4
	101	-1456.4	-3.8	435.3	-0.1	62.9	-2.6
15	80	1400.8	-719.7	-223.4	0.1	186.6	-1497.1
	101	-1319.3	719.7	223.4	-0.1	36.9	777.5
16	80	1610.5	-0.0	1057.5	-0.2	-989.7	-23.2
	101	-1529.0	0.0	-1057.5	0.2	-72.5	95.6

Comb.	Nodo	N [kg]	T1-2 [kg]	T1-3 [kg]	Mt [kgm]	M1-3 [kgm]	M1-2 [kgm]
17	80	1486.8	-45.9	-296.7	-0.3	261.5	-210.7
	101	-1405.3	45.9	296.7	0.3	34.6	197.1
1	101	1794.8	-508.3	15.4	0.2	-47.3	-704.2
	123	-1688.8	508.3	-15.4	-0.2	31.9	195.9
2	101	1733.2	-849.0	14.5	0.3	-45.7	-1170.3
	123	-1627.2	849.0	-14.5	-0.3	31.2	321.3
3	101	1897.8	-507.8	18.9	0.2	-53.9	-696.9
	123	-1791.8	507.8	-18.9	-0.2	35.0	189.1
4	101	1439.4	3.4	-27.1	0.2	-110.6	3.9
	123	-1333.5	-3.4	27.1	-0.2	137.7	-0.4
5	101	1430.5	-0.6	38.2	-0.2	21.3	-86.8
	123	-1349.0	0.6	-38.2	0.2	-42.1	68.7
6	101	1316.9	-39.3	27.9	-0.3	-22.3	-176.1
	123	-1235.4	39.3	-27.9	0.3	22.0	141.4
7	101	1350.2	-338.6	10.7	0.1	-34.2	-470.2
	123	-1268.7	338.6	-10.7	-0.1	23.5	131.6
8	101	1309.1	-565.7	10.1	0.2	-33.1	-781.0
	123	-1227.6	565.7	-10.1	-0.2	23.0	215.2
9	101	1418.9	-338.3	13.0	0.1	-38.6	-465.4
	123	-1337.3	338.3	-13.0	-0.1	25.5	127.1
10	101	1113.3	2.6	-17.6	0.1	-76.4	1.8
	123	-1031.8	-2.6	17.6	-0.1	94.0	0.8
11	101	1431.4	2.6	12.4	0.0	-37.2	1.6
	123	-1349.9	-2.6	-12.4	-0.0	24.8	1.0
12	101	1416.4	-111.0	12.3	0.0	-37.0	-153.9
	123	-1334.8	111.0	-12.3	-0.0	24.8	42.9
13	101	1258.4	2.2	6.6	-0.0	-26.3	-5.1
	123	-1176.9	-2.2	-6.6	0.0	19.7	7.3
14	101	1377.2	2.7	6.7	0.0	-45.7	2.7
	123	-1295.7	-2.7	-6.7	-0.0	39.0	-0.0
15	101	1240.4	-566.1	7.7	0.2	-28.7	-785.8
	123	-1158.9	566.1	-7.7	-0.2	21.0	219.8
16	101	1449.0	-0.7	41.6	-0.3	27.0	-95.7
	123	-1367.5	0.7	-41.6	0.3	-47.4	76.3
17	101	1326.2	-42.5	30.0	-0.3	-21.8	-197.3
	123	-1244.7	42.5	-30.0	0.3	22.2	161.0
1	123	1584.4	-406.9	38.5	0.2	-28.8	-204.2
	144	-1478.5	406.9	-38.5	-0.2	-9.7	-202.7
2	123	1523.2	-678.9	52.8	0.3	-25.5	-335.3
	144	-1417.3	678.9	-52.8	-0.3	-27.3	-343.6
3	123	1687.0	-406.5	39.6	0.2	-34.0	-197.4
	144	-1581.1	406.5	-39.6	-0.2	-5.6	-209.1
4	123	1232.1	2.6	25.3	0.2	-35.5	0.5
	144	-1126.1	-2.6	-25.3	-0.2	10.1	2.1
5	123	1267.8	-1.2	4.2	-0.3	9.5	-68.6

Comb.	Nodo	N [kg]	T1-2 [kg]	T1-3 [kg]	Mt [kgm]	M1-3 [kgm]	M1-2 [kgm]
	144	-1186.3	1.2	-4.2	0.3	-17.1	-6.4
6	123	1155.6	-36.6	17.4	-0.3	-13.3	-141.4
	144	-1074.1	36.6	-17.4	0.3	-9.4	-85.1
7	123	1188.5	-271.1	26.9	0.1	-20.7	-137.2
	144	-1107.0	271.1	-26.9	-0.1	-6.2	-133.9
8	123	1147.7	-452.4	36.4	0.2	-18.5	-224.6
	144	-1066.2	452.4	-36.4	-0.2	-17.9	-227.8
9	123	1256.9	-270.8	27.7	0.1	-24.2	-132.7
	144	-1175.4	270.8	-27.7	-0.1	-3.5	-138.2
10	123	953.6	1.9	18.1	0.1	-25.2	-0.7
	144	-872.1	-1.9	-18.1	-0.1	7.0	2.7
11	123	1269.3	1.4	12.7	-0.0	-25.2	-0.9
	144	-1187.8	-1.4	-12.7	0.0	12.4	2.3
12	123	1254.4	-89.3	17.5	0.0	-24.3	-44.7
	144	-1172.8	89.3	-17.5	-0.0	6.8	-44.6
13	123	1097.0	1.2	10.7	-0.0	-16.6	-7.2
	144	-1015.5	-1.2	-10.7	0.0	5.9	8.5
14	123	1215.5	1.5	13.9	-0.0	-25.6	0.1
	144	-1134.0	-1.5	-13.9	0.0	11.8	1.4
15	123	1079.3	-452.7	35.7	0.2	-15.1	-229.1
	144	-997.8	452.7	-35.7	-0.2	-20.6	-223.6
16	123	1286.1	-1.4	3.2	-0.3	14.4	-76.3
	144	-1204.6	1.4	-3.2	0.3	-21.3	-10.2
17	123	1164.9	-39.7	18.0	-0.3	-12.7	-161.0
	144	-1083.3	39.7	-18.0	0.3	-11.9	-102.1
1	144	1405.7	-427.1	-4.7	0.4	11.3	195.6
	212	-164.4	-830.7	4.7	-0.4	23.1	1269.4
2	144	1344.9	-711.4	-12.5	0.7	32.4	331.7
	212	-103.6	-1384.9	12.5	-0.7	58.2	2113.2
3	144	1507.8	-426.9	-1.8	0.4	4.6	202.0
	212	-266.5	-830.9	1.8	-0.4	8.8	1264.7
4	144	1057.0	1.8	-62.8	0.1	90.6	-2.1
	212	184.3	-1.8	62.8	-0.1	365.4	14.8
5	144	1129.2	-10.2	35.6	-0.2	-61.3	6.4
	212	-174.3	10.2	-35.6	0.2	-197.7	8.7
6	144	1018.6	-22.4	-5.0	0.0	4.9	85.1
	212	-63.7	22.4	5.0	-0.0	31.7	-55.0
7	144	1051.2	-284.6	-3.5	0.2	7.8	129.1
	212	-96.3	-553.9	3.5	-0.2	17.5	848.4
8	144	1010.7	-474.2	-8.6	0.4	21.9	219.9
	212	-55.8	-923.4	8.6	-0.4	40.9	1410.9
9	144	1119.2	-284.5	-1.6	0.2	3.4	133.4
	212	-164.4	-554.1	1.6	-0.2	8.0	845.2
10	144	818.7	1.3	-42.2	0.0	60.7	-2.6
	212	136.2	-1.3	42.2	-0.0	245.7	12.0
11	144	1131.5	0.2	4.9	-0.1	-14.9	-2.2

Comb.	Nodo	N [kg]	T1-2 [kg]	T1-3 [kg]	Mt [kgm]	M1-3 [kgm]	M1-2 [kgm]
	212	-176.7	-0.2	-4.9	0.1	-21.0	3.5
12	144	1116.7	-94.6	2.5	0.0	-8.2	43.1
	212	-161.8	-184.9	-2.5	-0.0	-10.0	284.5
13	144	960.2	0.4	0.3	-0.1	-4.1	-8.4
	212	-5.3	-0.4	-0.3	0.1	2.1	11.2
14	144	1078.3	0.5	-4.2	-0.1	-0.4	-1.4
	212	-123.4	-0.5	4.2	0.1	31.0	4.8
15	144	942.6	-474.3	-10.6	0.4	26.4	215.6
	212	12.2	-923.2	10.6	-0.4	50.4	1414.0
16	144	1147.4	-11.4	39.0	-0.2	-67.8	10.3
	212	-192.6	11.4	-39.0	0.2	-216.5	8.2
17	144	1027.8	-25.5	-5.3	0.0	5.2	102.1
	212	-73.0	25.5	5.3	-0.0	33.3	-61.3
1	110	16928.1	-57.1	-12.2	0.0	-0.0	-0.0
	170	-16529.1	57.1	12.2	0.0	61.2	-285.6
2	110	14660.4	-118.2	-18.2	0.0	-0.0	-0.0
	170	-14261.4	118.2	18.2	0.0	90.9	-591.1
3	110	19492.3	-57.7	-10.0	0.0	-0.0	-0.0
	170	-19093.3	57.7	10.0	0.0	50.1	-288.7
4	110	14472.7	44.6	-68.2	0.0	0.0	-0.0
	170	-14073.7	-44.6	68.2	0.0	341.2	223.0
5	110	10549.6	-5.6	30.4	0.0	0.0	-0.0
	170	-10242.7	5.6	-30.4	0.0	-151.8	-27.9
6	110	8986.1	-39.0	-1.4	0.0	0.0	-0.0
	170	-8679.1	39.0	1.4	0.0	6.8	-194.9
7	110	12277.2	-33.7	-8.9	0.0	-0.0	-0.0
	170	-11970.3	33.7	8.9	0.0	44.6	-168.5
8	110	10765.4	-74.4	-12.9	0.0	-0.0	-0.0
	170	-10458.5	74.4	12.9	0.0	64.5	-372.1
9	110	13986.7	-34.1	-7.5	0.0	-0.0	-0.0
	170	-13679.8	34.1	7.5	0.0	37.3	-170.5
10	110	10640.3	34.1	-46.3	0.0	0.0	-0.0
	170	-10333.4	-34.1	46.3	0.0	231.3	170.6
11	110	14866.7	28.3	-1.9	0.0	-0.0	0.0
	170	-14559.8	-28.3	1.9	0.0	9.3	141.5
12	110	14265.0	7.8	-3.8	0.0	-0.0	-0.0
	170	-13958.1	-7.8	3.8	0.0	19.0	38.9
13	110	10343.0	30.6	-4.7	0.0	-0.0	0.0
	170	-10036.0	-30.6	4.7	0.0	23.3	153.2
14	110	14240.0	29.5	-10.5	0.0	0.0	0.0
	170	-13933.1	-29.5	10.5	0.0	52.4	147.5
15	110	9055.9	-74.0	-14.4	0.0	-0.0	-0.0
	170	-8749.0	74.0	14.4	0.0	71.8	-370.1
16	110	10658.8	-8.6	33.2	0.0	-0.0	-0.0
	170	-10351.9	8.6	-33.2	0.0	-166.1	-42.8
17	110	8959.1	-44.6	-1.1	0.0	-0.0	-0.0

Comb.	Nodo	N [kg]	T1-2 [kg]	T1-3 [kg]	Mt [kgm]	M1-3 [kgm]	M1-2 [kgm]
	170	-8652.2	44.6	1.1	0.0	5.3	-223.0
1	170	15199.5	261.8	107.6	-0.3	-60.2	874.6
	193	-14933.0	-261.8	-107.6	0.3	-299.1	0.0
2	170	12931.7	351.7	129.9	-0.6	-73.5	1174.8
	193	-12665.1	-351.7	-129.9	0.6	-360.2	0.0
3	170	17764.0	262.5	88.4	-0.3	-48.4	876.8
	193	-17497.4	-262.5	-88.4	0.3	-246.7	0.0
4	170	12750.4	117.3	163.6	0.4	-349.1	391.6
	193	-12483.8	-117.3	-163.6	-0.4	-197.2	-0.0
5	170	9214.0	96.1	39.2	-0.3	148.0	320.8
	193	-9009.0	-96.1	-39.2	0.3	-205.7	-0.0
6	170	7651.2	179.7	78.6	-0.3	49.8	600.2
	193	-7446.2	-179.7	-78.6	0.3	-256.1	-0.0
7	170	10947.6	186.4	83.5	-0.2	-46.6	622.5
	193	-10742.6	-186.4	-83.5	0.2	-232.4	0.0
8	170	9435.7	246.3	98.4	-0.4	-55.5	822.7
	193	-9230.7	-246.3	-98.4	0.4	-273.1	0.0
9	170	12657.2	186.8	70.7	-0.2	-38.7	624.1
	193	-12452.2	-186.8	-70.7	0.2	-197.5	0.0
10	170	9314.8	90.0	120.9	0.3	-239.2	300.6
	193	-9109.8	-90.0	-120.9	-0.3	-164.5	-0.0
11	170	13537.4	95.1	52.2	0.0	-27.3	317.5
	193	-13332.4	-95.1	-52.2	-0.0	-147.0	0.0
12	170	12935.7	125.2	59.2	-0.1	-31.6	418.3
	193	-12730.6	-125.2	-59.2	0.1	-166.2	0.0
13	170	9013.5	91.9	77.5	0.0	-42.4	306.9
	193	-8808.5	-91.9	-77.5	-0.0	-216.5	0.0
14	170	12911.5	94.0	63.7	0.1	-68.3	313.9
	193	-12706.5	-94.0	-63.7	-0.1	-144.4	-0.0
15	170	7726.1	245.9	111.2	-0.4	-63.4	821.2
	193	-7521.1	-245.9	-111.2	0.4	-308.1	0.0
16	170	9322.6	96.4	35.5	-0.3	163.5	322.0
	193	-9117.6	-96.4	-35.5	0.3	-201.4	0.0
17	170	7623.8	186.8	78.2	-0.3	57.5	623.8
	193	-7418.8	-186.8	-78.2	0.3	-257.6	0.0

2.2 Sollecitazioni nelle travi

Convenzioni adottate

Le sollecitazioni nelle travi sono da intendersi nel sistema di riferimento locale dell'elemento, e si riferiscono all'asta. L'orientamento della trave nello spazio è definito a mezzo del nodo *K*.

La terna di riferimento locale dell'asta è così disposta:

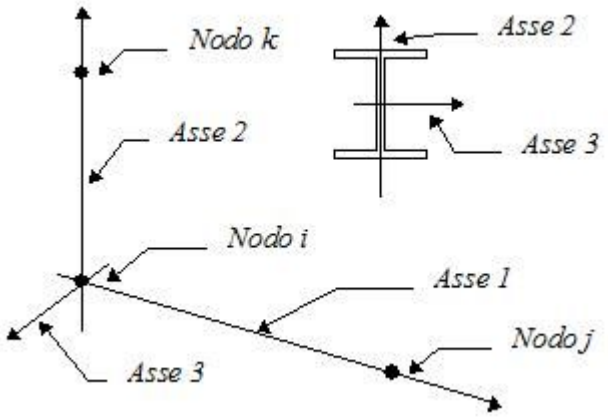

Per qunto concerne i segni positivi assunti per le varie componenti di sollecitazione si assumono come positivi i versi e le sollecitazioni se così diretti:

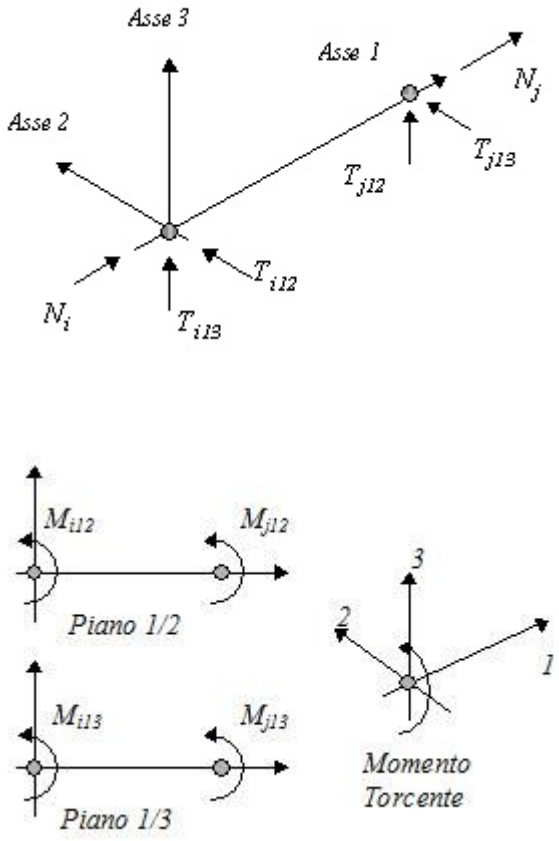

Per ogni trave vengono riportate, nelle varie combinazioni di carico, le componenti di sollecitazione alle estremità dell'asta.

Comb.	Nodo	N [kg]	T1-2 [kg]	T1-3 [kg]	Mt [kgm]	M1-3 [kgm]	M1-2 [kgm]
1	188	1902.2	12493.7	-105.6	372.8	736.5	0.0
	207	-957.2	12495.0	105.6	-372.8	716.6	0.0
2	188	1851.8	10868.8	-207.0	343.8	1364.5	0.0
	207	-1029.6	10870.0	207.0	-343.8	1483.2	0.0

Comb.	Nodo	N [kg]	T1-2 [kg]	T1-3 [kg]	Mt [kgm]	M1-3 [kgm]	M1-2 [kgm]
3	188	1907.6	16068.5	-93.5	426.7	682.7	0.0
	207	-692.1	16070.2	93.5	-426.7	604.0	0.0
4	188	1055.6	10868.8	-112.2	266.8	961.9	0.0
	207	-233.5	10870.0	112.2	-266.8	582.0	0.0
5	188	761.6	3610.9	63.1	148.1	-438.7	0.0
	207	-488.5	3611.3	-63.1	-148.1	-428.0	0.0
6	188	846.7	3610.9	-65.2	255.7	461.4	0.0
	207	-573.6	3611.3	65.2	-255.7	442.3	0.0
7	188	1330.4	8521.7	-70.6	262.6	493.1	0.0
	207	-685.8	8522.6	70.6	-262.6	478.5	0.0
8	188	1296.8	7438.5	-138.2	243.3	911.8	0.0
	207	-734.1	7439.2	138.2	-243.3	989.6	0.0
9	188	1333.9	10904.9	-62.6	298.5	457.3	0.0
	207	-509.1	10906.1	62.6	-298.5	403.5	0.0
10	188	766.0	7438.5	-75.0	191.9	643.4	0.0
	207	-203.3	7439.2	75.0	-191.9	388.8	0.0
11	188	1150.3	10904.9	32.6	288.9	-141.2	0.0
	207	-325.4	10906.1	-32.6	-288.9	-306.8	0.0
12	188	1159.5	10543.8	-0.5	283.5	64.8	0.0
	207	-361.9	10545.0	0.5	-283.5	-57.5	0.0
13	188	842.8	4997.5	11.6	181.6	-45.8	0.0
	207	-464.8	4998.0	-11.6	-181.6	-114.2	0.0
14	188	1053.3	10543.8	12.1	273.2	11.2	0.0
	207	-255.8	10545.0	-12.1	-273.2	-177.7	0.0
15	188	1293.2	5055.3	-146.2	207.4	947.6	0.0
	207	-910.8	5055.8	146.2	-207.4	1064.6	0.0
16	188	760.0	3610.9	68.0	146.8	-475.0	0.0
	207	-486.9	3611.3	-68.0	-146.8	-459.7	0.0
17	188	852.6	3610.9	-74.4	263.9	522.9	0.0
	207	-579.5	3611.3	74.4	-263.9	507.2	0.0
1	194	1039.8	1007.9	-271.6	-423.8	2042.3	3567.6
	201	-1039.8	-1007.9	271.6	423.8	-955.0	467.0
2	194	1446.5	1691.0	-424.2	-594.7	3025.1	6027.4
	201	-1446.5	-1691.0	424.2	594.7	-1327.1	741.6
3	194	993.6	1040.2	-289.0	-179.5	2199.9	3687.4
	201	-993.6	-1040.2	289.0	179.5	-1043.2	476.5
4	194	403.0	-118.7	-6.7	11.9	342.8	-383.2
	201	-403.0	118.7	6.7	-11.9	-316.0	-92.0
5	194	568.2	234.7	14.5	-807.7	26.0	723.4
	201	-568.2	-234.7	-14.5	807.7	-75.4	228.7
6	194	753.3	542.5	-57.3	-683.1	453.0	1789.9
	201	-753.3	-542.5	57.3	683.1	-227.0	397.7
7	194	740.0	658.0	-178.5	-370.6	1355.7	2325.6
	201	-740.0	-658.0	178.5	370.6	-641.0	308.2
8	194	1011.2	1113.4	-280.2	-484.6	2010.9	3965.4
	201	-1011.2	-1113.4	280.2	484.6	-889.1	491.3

Comb.	Nodo	N [kg]	T1-2 [kg]	T1-3 [kg]	Mt [kgm]	M1-3 [kgm]	M1-2 [kgm]
9	194	709.3	679.5	-190.1	-207.8	1460.8	2405.5
	201	-709.3	-679.5	190.1	207.8	-699.8	314.5
10	194	315.5	-93.1	-1.9	-80.1	222.7	-308.3
	201	-315.5	93.1	1.9	80.1	-215.0	-64.4
11	194	299.2	-18.5	-28.9	-113.5	397.8	-101.1
	201	-299.2	18.5	28.9	113.5	-282.0	27.0
12	194	435.2	210.8	-80.7	-162.0	734.3	724.0
	201	-435.2	-210.8	80.7	162.0	-411.1	119.9
13	194	344.2	-72.2	0.7	-472.9	126.4	-289.3
	201	-344.2	72.2	-0.7	472.9	-129.1	0.1
14	194	296.0	-30.5	-25.1	-81.1	376.7	-130.8
	201	-296.0	30.5	25.1	81.1	-276.3	8.8
15	194	1042.0	1091.8	-268.7	-647.4	1905.9	3885.5
	201	-1042.0	-1091.8	268.7	647.4	-830.3	485.0
16	194	589.6	261.9	16.1	-829.4	15.2	813.7
	201	-589.6	-261.9	-16.1	829.4	-70.7	248.5
17	194	796.4	597.8	-64.1	-694.7	496.5	1978.5
	201	-796.4	-597.8	64.1	694.7	-243.9	431.9
1	200	-1615.0	-1715.6	-530.1	-163.3	1831.2	-5840.0
	202	1667.6	3093.1	530.1	163.3	-294.9	-1128.4
2	200	-2877.9	-3182.4	-776.3	-126.8	2852.8	-8362.3
	202	2923.8	4380.8	776.3	126.8	-603.0	-2597.5
3	200	-1654.2	-1548.7	-541.7	-169.5	1826.3	-6278.4
	202	1721.9	3320.4	541.7	169.5	-256.4	-777.4
4	200	-1279.7	153.4	1060.0	-279.3	1278.3	-1909.5
	202	1325.5	1045.0	-1060.0	279.3	-4350.2	617.4
5	200	94.9	58.0	-40.2	-219.7	-58.6	-659.6
	202	-79.7	340.1	40.2	219.7	152.8	252.3
6	200	-509.0	-603.2	-277.3	26.5	729.4	-1989.3
	202	524.2	1001.3	277.3	-26.5	-75.9	-335.6
7	200	-1073.8	-1138.3	-361.5	-119.5	1242.3	-3928.4
	202	1109.7	2077.9	361.5	119.5	-194.6	-732.2
8	200	-1915.8	-2116.2	-525.6	-95.1	1923.4	-5609.9
	202	1947.1	2936.3	525.6	95.1	-400.0	-1711.6
9	200	-1099.9	-1027.0	-369.2	-123.6	1239.1	-4220.7
	202	1145.9	2229.4	369.2	123.6	-168.9	-498.2
10	200	-850.3	107.7	698.5	-196.8	873.7	-1308.1
	202	881.7	712.5	-698.5	196.8	-2898.1	431.7
11	200	113.1	394.4	-111.0	-141.6	201.4	-1479.6
	202	-67.2	807.9	111.0	141.6	120.5	880.3
12	200	-302.3	-89.5	-194.4	-131.5	543.7	-2344.6
	202	346.8	1252.0	194.4	131.5	19.9	400.7
13	200	90.7	157.9	-83.2	-111.0	185.8	-729.9
	202	-69.6	393.1	83.2	111.0	55.3	389.0
14	200	-89.2	355.3	50.4	-151.8	333.7	-1484.3
	202	133.7	807.3	-50.4	151.8	-479.8	829.3

Comb.	Nodo	N [kg]	T1-2 [kg]	T1-3 [kg]	Mt [kgm]	M1-3 [kgm]	M1-2 [kgm]
15	200	-1889.6	-2227.4	-517.9	-91.0	1926.6	-5317.6
	202	1911.0	2784.8	517.9	91.0	-425.6	-1945.7
16	200	95.5	54.7	-36.1	-230.0	-78.7	-667.8
	202	-80.3	343.5	36.1	230.0	160.9	250.9
17	200	-558.9	-662.5	-295.6	37.2	783.1	-2110.3
	202	574.1	1060.6	295.6	-37.2	-86.5	-386.5
1	202	-1661.8	-3096.3	-530.1	-163.8	294.6	1128.4
	203	1714.7	4550.6	530.1	163.8	1327.4	-12827.6
2	202	-2915.5	-4386.2	-776.3	-127.9	602.7	2597.5
	203	2961.5	5651.4	776.3	127.9	1772.6	-17954.4
3	202	-1715.7	-3323.6	-541.7	-170.0	256.1	777.4
	203	1783.7	5194.0	541.7	170.0	1401.4	-13808.7
4	202	-1323.6	-1047.5	1060.0	-287.4	4349.7	-617.4
	203	1369.6	2312.6	-1060.0	287.4	-7593.0	-4523.4
5	202	83.8	-340.0	-14.7	-219.4	-153.2	-252.3
	203	-68.5	760.3	14.7	219.4	790.0	-1431.9
6	202	-498.1	-1003.0	-271.5	26.5	75.8	335.6
	203	513.4	1423.3	271.5	-26.5	1110.0	-4047.8
7	202	-1105.8	-2080.0	-361.5	-119.8	194.4	732.2
	203	1141.9	3071.9	361.5	119.8	911.8	-8614.3
8	202	-1941.6	-2940.0	-525.6	-95.9	399.8	1711.6
	203	1973.1	3805.8	525.6	95.9	1208.6	-12032.2
9	202	-1141.7	-2231.5	-369.2	-124.0	168.7	498.2
	203	1187.9	3500.9	369.2	124.0	961.2	-9268.4
10	202	-880.3	-714.1	698.5	-202.3	2897.8	-431.7
	203	911.8	1580.0	-698.5	202.3	-5035.1	-3078.1
11	202	68.7	-807.8	-111.0	-141.4	-120.7	-880.3
	203	-22.5	2077.2	111.0	141.4	460.5	-3533.6
12	202	-344.4	-1252.7	-194.4	-131.4	-20.1	-400.7
	203	389.0	2480.0	194.4	131.4	615.1	-5310.1
13	202	70.3	-393.0	-83.2	-110.9	-55.5	-389.0
	203	-49.2	974.7	83.2	110.9	310.0	-1703.5
14	202	-132.2	-807.5	50.4	-152.7	479.5	-829.3
	203	176.8	2034.8	-50.4	152.7	-633.7	-3519.3
15	202	-1905.7	-2788.4	-517.9	-91.8	425.5	1945.7
	203	1927.1	3376.8	517.9	91.8	1159.2	-11378.1
16	202	84.6	-343.4	-7.7	-229.7	-161.3	-250.9
	203	-69.3	763.7	7.7	229.7	845.3	-1443.7
17	202	-545.8	-1062.5	-289.1	37.1	86.5	386.5
	203	561.1	1482.8	289.1	-37.1	1186.6	-4280.6
1	203	-9995.3	-677.5	586.0	-770.3	1255.2	2513.9
	204	10039.6	-409.1	-586.0	770.3	-2595.3	-2820.8
2	203	-16252.7	170.9	860.9	-706.4	1724.6	6008.1
	204	16291.3	-1116.2	-860.9	706.4	-3693.2	-4536.3
3	203	-10209.3	-1124.3	594.6	-931.4	1317.9	1960.1

Comb.	Nodo	N [kg]	T1-2 [kg]	T1-3 [kg]	Mt [kgm]	M1-3 [kgm]	M1-2 [kgm]
	204	10266.2	-273.2	-594.6	931.4	-2677.7	-2933.3
4	203	-2783.4	-1279.3	3629.9	-695.3	-6563.9	-1268.7
	204	2821.9	334.0	-3629.9	695.3	-1737.1	-576.0
5	203	-811.0	-221.9	-84.6	109.9	681.0	590.6
	204	823.8	-92.2	84.6	-109.9	-359.1	-739.0
6	203	-3417.4	-54.8	255.5	-251.2	696.6	1432.7
	204	3430.2	-259.2	-255.5	251.2	-1001.3	-1199.1
7	203	-6752.1	-455.3	401.2	-536.7	856.8	1747.5
	204	6782.3	-285.9	-401.2	536.7	-1774.2	-1941.1
8	203	-10923.7	110.4	584.4	-494.0	1169.7	4076.9
	204	10950.1	-757.3	-584.4	494.0	-2506.2	-3084.8
9	203	-6894.7	-753.1	406.9	-644.0	898.6	1378.3
	204	6933.4	-195.3	-406.9	644.0	-1829.2	-2016.2
10	203	-1944.2	-856.4	2430.4	-486.6	-4355.9	-774.2
	204	1970.5	209.5	-2430.4	486.6	-1202.1	-444.6
11	203	-717.6	-1349.9	121.3	-625.7	379.0	-1623.7
	204	756.2	401.5	-121.3	625.7	-656.4	-378.8
12	203	-2794.5	-1095.0	214.1	-613.5	541.1	-513.6
	204	2831.8	178.0	-214.1	613.5	-1030.7	-942.0
13	203	-592.8	-548.8	98.3	-347.8	247.4	-398.6
	204	610.6	114.2	-98.3	347.8	-472.2	-359.5
14	203	-998.6	-1288.4	583.3	-612.0	-564.1	-1483.9
	204	1035.9	371.4	-583.3	612.0	-769.9	-413.9
15	203	-10781.1	408.3	578.7	-386.6	1127.9	4446.1
	204	10799.0	-847.9	-578.7	386.6	-2451.3	-3009.8
16	203	-831.8	-209.6	-98.5	204.5	724.7	652.9
	204	844.6	-104.5	98.5	-204.5	-355.4	-773.1
17	203	-3661.5	-28.2	271.2	-43.0	742.3	1567.0
	204	3674.3	-285.8	-271.2	43.0	-1061.7	-1272.5
1	184	-1562.3	337.9	530.1	-163.3	-3367.4	8815.7
	200	1615.0	-1715.6	-530.1	163.3	1831.2	-5840.0
2	184	-2832.1	1983.9	776.3	-126.8	-5102.6	15848.7
	200	2877.9	-3182.4	-776.3	126.8	2852.8	-8362.3
3	184	-1586.4	-223.3	541.7	-169.5	-3396.3	8199.1
	200	1654.2	-1548.7	-541.7	169.5	1826.3	-6278.4
4	184	-1233.9	-1351.9	-1060.0	-279.3	1793.7	-271.8
	200	1279.7	153.4	1060.0	279.3	1278.3	-1909.5
5	184	106.8	-456.3	224.8	-219.7	-130.8	-85.6
	200	-91.6	58.1	-224.8	219.7	-58.6	-659.6
6	184	-517.6	203.5	325.1	26.5	-1523.7	3156.1
	200	532.8	-601.7	-325.1	-26.5	729.4	-1989.3
7	184	-1037.9	198.6	361.5	-119.5	-2290.0	5865.6
	200	1073.8	-1138.3	-361.5	119.5	1242.3	-3928.4
8	184	-1884.4	1295.9	525.6	-95.1	-3446.8	10554.3
	200	1915.8	-2116.2	-525.6	95.1	1923.4	-5609.9
9	184	-1054.0	-175.5	369.2	-123.6	-2309.2	5454.6

Comb.	Nodo	N [kg]	T1-2 [kg]	T1-3 [kg]	Mt [kgm]	M1-3 [kgm]	M1-2 [kgm]
	200	1099.9	-1027.0	-369.2	123.6	1239.1	-4220.7
10	184	-818.9	-928.0	-698.5	-196.8	1150.8	-192.7
	200	850.3	107.7	698.5	196.8	873.7	-1308.1
11	184	159.1	-1596.9	111.0	-141.6	-523.2	-1406.1
	200	-113.1	394.4	-111.0	141.6	201.4	-1479.6
12	184	-257.9	-1073.2	194.4	-131.5	-1107.2	919.1
	200	302.3	-89.5	-194.4	131.5	543.7	-2344.6
13	184	111.7	-709.0	83.2	-111.0	-426.8	-526.3
	200	-90.7	157.9	-83.2	111.0	185.8	-729.9
14	184	-44.8	-1518.0	-50.4	-151.8	-187.7	-1230.3
	200	89.2	355.3	50.4	151.8	333.7	-1484.3
15	184	-1868.3	1670.0	517.9	-91.0	-3427.5	10965.4
	200	1889.6	-2227.4	-517.9	91.0	1926.6	-5317.6
16	184	107.2	-452.9	238.5	-230.0	-106.9	-67.5
	200	-92.0	54.8	-238.5	230.0	-78.7	-667.8
17	184	-569.7	262.6	348.0	37.2	-1629.9	3448.5
	200	584.9	-660.8	-348.0	-37.2	783.1	-2110.3
1	204	-10037.6	456.2	586.0	-758.1	2598.8	2820.8
	205	10082.4	-1699.3	-586.0	758.1	-4132.2	0.0
2	204	-16285.8	1192.7	860.9	-689.0	3696.5	4536.3
	205	16324.8	-2274.1	-860.9	689.0	-5949.2	0.0
3	204	-10264.8	321.4	594.6	-918.8	2682.0	2933.3
	205	10322.4	-1920.2	-594.6	918.8	-4237.9	0.0
4	204	-2823.5	-320.8	3629.9	-687.1	1740.3	576.0
	205	2862.4	-760.7	-3629.9	687.1	-11238.8	0.0
5	204	-821.6	102.7	-106.5	167.1	358.7	739.0
	205	834.5	-462.0	106.5	-167.1	-81.4	0.0
6	204	-3407.8	278.5	241.9	-61.8	1002.3	1199.1
	205	3420.8	-637.8	-241.9	61.8	-1586.0	0.0
7	204	-6780.9	317.7	401.2	-528.3	1776.7	1941.1
	205	6811.5	-1165.6	-401.2	528.3	-2826.5	0.0
8	204	-10946.4	808.7	584.4	-482.2	2508.5	3084.8
	205	10973.1	-1548.8	-584.4	482.2	-4037.8	0.0
9	204	-6932.4	227.8	406.9	-635.4	1832.2	2016.2
	205	6971.5	-1312.9	-406.9	635.4	-2897.0	0.0
10	204	-1971.5	-200.3	2430.4	-481.0	1204.4	444.6
	205	1998.2	-539.9	-2430.4	481.0	-7564.3	0.0
11	204	-758.1	-397.9	121.3	-622.6	659.3	378.8
	205	797.2	-687.1	-121.3	622.6	-976.8	0.0
12	204	-2832.7	-164.7	214.1	-608.7	1033.6	942.0
	205	2870.5	-884.4	-214.1	608.7	-1593.9	0.0
13	204	-611.1	-111.3	98.3	-345.6	473.8	359.5
	205	629.0	-385.9	-98.3	345.6	-731.0	0.0
14	204	-1037.7	-366.5	583.3	-608.4	772.8	413.9
	205	1075.5	-682.6	-583.3	608.4	-2299.2	0.0
15	204	-10794.9	898.6	578.7	-375.1	2453.1	3009.8

Comb.	Nodo	N [kg]	T1-2 [kg]	T1-3 [kg]	Mt [kgm]	M1-3 [kgm]	M1-2 [kgm]
	205	10813.0	-1401.6	-578.7	375.1	-3967.4	0.0
16	204	-842.4	115.7	-121.8	204.8	354.8	773.1
	205	855.3	-475.0	121.8	-204.8	-39.6	0.0
17	204	-3650.1	306.6	256.5	-43.0	1062.7	1272.5
	205	3663.1	-665.9	-256.5	43.0	-1681.2	0.0
1	186	3668.2	13082.4	-620.4	-168.9	4162.0	-0.0
	206	-2678.7	13083.1	550.6	168.9	3894.6	-0.0
2	186	5022.7	11381.0	-927.5	-165.1	6275.2	-0.0
	206	-4161.9	11381.5	866.8	165.1	6069.0	-0.0
3	186	3841.8	16825.7	-633.9	-171.7	4209.7	-0.0
	206	-2569.1	16826.5	544.2	171.7	3895.4	-0.0
4	186	3141.6	11381.0	-171.5	-225.3	832.5	0.0
	206	-2280.7	11381.5	110.8	225.3	1109.4	-0.0
5	186	611.3	3781.1	-99.6	-95.0	687.8	0.0
	206	-325.3	3781.2	79.4	95.0	543.7	0.0
6	186	673.9	3781.1	-289.4	-164.8	1982.6	0.0
	206	-387.9	3781.2	269.3	164.8	1861.2	0.0
7	186	2502.1	8923.3	-422.2	-127.3	2837.2	-0.0
	206	-1827.1	8923.7	374.6	127.3	2644.7	-0.0
8	186	3405.1	7789.0	-626.9	-124.7	4246.0	-0.0
	206	-2815.9	7789.3	585.4	124.7	4094.3	-0.0
9	186	2617.8	11418.8	-431.2	-129.1	2869.0	-0.0
	206	-1754.1	11419.3	370.3	129.1	2645.2	-0.0
10	186	2150.9	7789.0	-122.9	-164.8	617.5	0.0
	206	-1561.8	7789.3	81.4	164.8	787.9	-0.0
11	186	1107.0	11418.8	-113.4	-127.9	698.4	-0.0
	206	-243.3	11419.3	52.5	127.9	443.2	-0.0
12	186	1575.9	11040.7	-217.0	-127.2	1409.2	-0.0
	206	-740.8	11041.2	158.1	127.2	1171.1	-0.0
13	186	720.6	5233.0	-85.2	-118.6	573.6	-0.0
	206	-324.7	5233.2	57.3	118.6	406.7	-0.0
14	186	1325.1	11040.7	-116.2	-135.3	683.5	0.0
	206	-490.0	11041.2	57.3	135.3	509.8	-0.0
15	186	3289.4	5293.5	-617.9	-122.9	4214.2	-0.0
	206	-2889.0	5293.7	589.7	122.9	4093.8	-0.0
16	186	609.3	3781.1	-102.0	-92.9	704.1	-0.0
	206	-323.4	3781.2	81.8	92.9	560.2	-0.0
17	186	678.9	3781.1	-312.4	-168.7	2138.9	-0.0
	206	-392.9	3781.2	292.2	168.7	2020.4	-0.0
1	190	595.8	11893.6	-6.6	211.9	-222.4	0.0
	209	303.8	11893.6	-112.1	-211.9	-503.8	0.0
2	190	1484.6	10346.7	39.6	219.4	-473.6	-0.0
	209	-702.0	10346.7	-142.8	-219.4	-781.3	0.0
3	190	463.8	15296.7	-13.5	220.6	-264.3	-0.0
	209	693.2	15296.7	-139.2	-220.6	-600.6	0.0

Comb.	Nodo	N [kg]	T1-2 [kg]	T1-3 [kg]	Mt [kgm]	M1-3 [kgm]	M1-2 [kgm]
4	190	-588.2	10346.7	-61.6	161.1	132.3	0.0
	209	1370.8	10346.7	-41.6	-161.1	5.1	0.0
5	190	-211.1	3437.5	-103.8	170.2	634.8	-0.0
	209	471.1	3437.5	69.5	-170.2	557.3	0.0
6	190	-186.5	3437.5	-125.3	201.3	798.7	0.0
	209	446.5	3437.5	91.0	-201.3	689.8	-0.0
7	190	367.4	8112.4	-8.0	157.5	-127.1	0.0
	209	246.2	8112.4	-72.9	-157.5	-319.7	0.0
8	190	959.9	7081.2	22.8	162.5	-294.5	-0.0
	209	-424.3	7081.2	-93.4	-162.5	-504.7	0.0
9	190	279.4	10381.1	-12.6	163.4	-155.0	-0.0
	209	505.8	10381.1	-91.0	-163.4	-384.3	0.0
10	190	-422.0	7081.2	-44.7	123.7	109.4	0.0
	209	957.6	7081.2	-26.0	-123.7	19.6	0.0
11	190	-555.5	10381.1	-53.0	150.1	98.0	-0.0
	209	1340.7	10381.1	-50.6	-150.1	-81.4	0.0
12	190	-265.2	10037.4	-38.3	153.3	14.1	-0.0
	209	1024.4	10037.4	-61.9	-153.3	-176.7	0.0
13	190	-345.2	4757.4	-38.3	133.5	145.1	0.0
	209	705.1	4757.4	-9.2	-133.5	54.6	-0.0
14	190	-541.6	10037.4	-51.8	145.5	94.9	0.0
	209	1300.8	10037.4	-48.4	-145.5	-71.8	0.0
15	190	1047.9	4812.4	27.4	156.7	-266.6	0.0
	209	-683.9	4812.4	-75.4	-156.7	-440.2	0.0
16	190	-203.7	3437.5	-114.6	174.0	708.7	-0.0
	209	463.7	3437.5	80.3	-174.0	633.1	-0.0
17	190	-175.3	3437.5	-136.0	207.4	872.7	-0.0
	209	435.3	3437.5	101.7	-207.4	763.3	-0.0
1	201	1040.4	-1007.3	271.6	-423.2	-955.2	467.0
	213	-1040.4	1007.3	-271.6	423.2	-1695.1	-10295.2
2	201	1447.5	-1690.1	424.2	-593.9	-1327.5	741.6
	213	-1447.5	1690.1	-424.2	593.9	-2811.3	-17232.2
3	201	994.2	-1039.6	289.0	-178.9	-1043.3	476.5
	213	-994.2	1039.6	-289.0	178.9	-1776.2	-10620.0
4	201	402.9	119.0	6.7	12.1	-316.0	-92.0
	213	-402.9	-119.0	-6.7	-12.1	250.9	1252.7
5	201	568.4	-234.4	-14.5	-807.7	-75.8	228.7
	213	-568.4	234.4	14.5	807.7	-244.4	-2505.8
6	201	753.6	-542.1	57.3	-682.9	-227.3	397.7
	213	-753.6	542.1	-57.3	682.9	-481.5	-5674.5
7	201	740.4	-657.5	178.5	-370.3	-641.2	308.2
	213	-740.4	657.5	-178.5	370.3	-1100.8	-6723.8
8	201	1011.8	-1112.8	280.2	-484.0	-889.4	491.3
	213	-1011.8	1112.8	-280.2	484.0	-1845.0	-11348.5
9	201	709.7	-679.1	190.1	-207.4	-699.9	314.5
	213	-709.7	679.1	-190.1	207.4	-1154.9	-6940.3

Comb.	Nodo	N [kg]	T1-2 [kg]	T1-3 [kg]	Mt [kgm]	M1-3 [kgm]	M1-2 [kgm]
10	201	315.4	93.3	1.9	-80.0	-215.1	-64.4
	213	-315.4	-93.3	-1.9	80.0	196.5	974.8
11	201	299.2	18.7	28.9	-113.4	-282.1	27.0
	213	-299.2	-18.7	-28.9	113.4	-0.1	155.5
12	201	435.3	-210.6	80.7	-161.7	-411.2	119.9
	213	-435.3	210.6	-80.7	161.7	-376.5	-2174.5
13	201	344.2	72.4	-0.7	-472.8	-129.4	0.1
	213	-344.2	-72.4	0.7	472.8	136.0	706.7
14	201	296.0	30.6	25.1	-80.9	-276.4	8.8
	213	-296.0	-30.6	-25.1	80.9	31.8	290.2
15	201	1042.6	-1091.2	268.7	-646.9	-830.7	485.0
	213	-1042.6	1091.2	-268.7	646.9	-1790.9	-11131.9
16	201	589.8	-261.5	-16.1	-829.3	-71.1	248.5
	213	-589.8	261.5	16.1	829.3	-291.1	-2789.7
17	201	796.7	-597.4	64.1	-694.6	-244.3	431.9
	213	-796.7	597.4	-64.1	694.6	-549.1	-6246.7
1	192	141.2	11889.8	240.4	-256.8	-1695.7	0.0
	211	758.1	11889.8	-240.4	256.8	-1612.4	0.0
2	192	-477.9	10343.4	460.8	-178.3	-3251.6	0.0
	211	1260.3	10343.4	-460.8	178.3	-3088.7	0.0
3	192	422.7	15291.8	229.9	-274.7	-1609.0	0.0
	211	733.9	15291.8	-229.9	274.7	-1555.0	0.0
4	192	713.8	10343.4	-178.9	-387.7	1322.5	0.0
	211	68.5	10343.4	178.9	387.7	1139.8	0.0
5	192	-32.6	3436.4	47.4	-143.1	-402.0	0.0
	211	292.5	3436.4	-47.4	143.1	-252.9	0.0
6	192	-175.8	3436.4	55.9	-97.7	-472.4	0.0
	211	435.7	3436.4	-55.9	97.7	-301.9	0.0
7	192	87.2	8109.8	155.2	-198.8	-1099.1	0.0
	211	526.2	8109.8	-155.2	198.8	-1036.9	0.0
8	192	-325.6	7078.9	302.1	-146.5	-2136.4	0.0
	211	861.0	7078.9	-302.1	146.5	-2021.1	0.0
9	192	274.9	10377.8	148.3	-210.7	-1041.3	0.0
	211	510.1	10377.8	-148.3	210.7	-998.6	0.0
10	192	468.9	7078.9	-124.3	-286.1	913.0	0.0
	211	66.5	7078.9	124.3	286.1	797.9	0.0
11	192	747.2	10377.8	-66.9	-274.2	472.5	0.0
	211	37.7	10377.8	66.9	274.2	448.0	0.0
12	192	557.2	10034.2	6.0	-249.7	-41.5	0.0
	211	201.8	10034.2	-6.0	249.7	-40.8	0.0
13	192	257.7	4755.9	-49.0	-235.7	325.7	0.0
	211	102.0	4755.9	49.0	235.7	348.5	0.0
14	192	716.0	10034.2	-79.3	-277.6	568.4	0.0
	211	42.9	10034.2	79.3	277.6	523.0	0.0
15	192	-513.3	4810.9	309.1	-134.5	-2194.2	0.0
	211	877.2	4810.9	-309.1	134.5	-2059.3	0.0

Comb.	Nodo	N [kg]	T1-2 [kg]	T1-3 [kg]	Mt [kgm]	M1-3 [kgm]	M1-2 [kgm]
16	192	-46.1	3436.4	57.5	-135.6	-474.8	0.0
	211	306.0	3436.4	-57.5	135.6	-319.5	0.0
17	192	-198.7	3436.4	67.6	-86.6	-556.0	0.0
	211	458.6	3436.4	-67.6	86.6	-379.5	0.0
1	25	70.3	5812.7	-0.9	0.2	30.2	0.0
	26	-70.3	5812.7	0.9	-0.2	-20.5	0.0
2	25	86.9	5250.2	-0.6	0.3	39.3	0.0
	26	-86.9	5250.2	0.6	-0.3	-32.4	0.0
3	25	53.5	5250.2	0.1	0.2	24.8	0.0
	26	-53.5	5250.2	-0.1	-0.2	-26.0	0.0
4	25	-2933.6	5250.2	-32.7	0.0	246.9	0.0
	26	2933.6	5250.2	32.7	-0.0	112.4	0.0
5	25	-18.1	3779.0	0.1	0.3	3.5	0.0
	26	18.1	3779.0	-0.1	-0.3	-6.2	0.0
6	25	141.6	3779.0	1.7	0.5	-4.3	0.0
	26	-141.6	3779.0	-1.7	-0.5	-16.1	0.0
7	25	49.9	4279.0	-0.8	0.2	21.7	0.0
	26	-49.9	4279.0	0.8	-0.2	-13.4	0.0
8	25	61.0	3904.0	-0.6	0.2	27.7	0.0
	26	-61.0	3904.0	0.6	-0.2	-21.3	0.0
9	25	38.7	3904.0	-0.1	0.2	18.1	0.0
	26	-38.7	3904.0	0.1	-0.2	-17.0	0.0
10	25	-1952.7	3904.0	-21.9	0.0	166.1	0.0
	26	1952.7	3904.0	21.9	-0.0	75.3	0.0
11	25	16.6	3904.0	-0.2	0.1	7.7	0.0
	26	-16.6	3904.0	0.2	-0.1	-5.1	0.0
12	25	22.7	3779.0	-0.2	0.1	10.9	0.0
	26	-22.7	3779.0	0.2	-0.1	-9.1	0.0
13	25	27.2	3779.0	-1.2	0.1	11.9	0.0
	26	-27.2	3779.0	1.2	-0.1	0.7	0.0
14	25	-380.0	3779.0	-4.4	0.1	38.6	0.0
	26	380.0	3779.0	4.4	-0.1	10.3	0.0
15	25	72.1	4279.0	-1.2	0.2	31.3	0.0
	26	-72.1	4279.0	1.2	-0.2	-17.7	0.0
16	25	-6.4	3779.0	0.2	0.3	2.4	0.0
	26	6.4	3779.0	-0.2	-0.3	-7.1	0.0
17	25	160.1	3779.0	2.2	0.5	-7.2	0.0
	26	-160.1	3779.0	-2.2	-0.5	-18.6	0.0
1	26	252.4	1009.3	0.7	-0.2	-9.6	0.0
	27	-252.4	1009.3	-0.7	0.2	2.2	0.0
2	26	536.3	1009.3	-2.2	-0.2	12.6	0.0
	27	-536.3	1009.3	2.2	0.2	8.9	0.0
3	26	248.2	1009.3	1.0	-0.2	-11.6	0.0
	27	-248.2	1009.3	-1.0	0.2	1.8	0.0
4	26	-2616.0	1009.3	-2.5	-0.3	-8.1	0.0

Comb.	Nodo	N [kg]	T1-2 [kg]	T1-3 [kg]	Mt [kgm]	M1-3 [kgm]	M1-2 [kgm]
	27	2616.0	1009.3	2.5	0.3	33.6	0.0
5	26	306.5	776.4	2.7	0.2	-21.8	0.0
	27	-306.5	776.4	-2.7	-0.2	-5.7	0.0
6	26	314.7	776.4	-2.4	0.4	4.7	0.0
	27	-314.7	776.4	2.4	-0.4	19.6	0.0
7	26	156.9	776.4	0.9	-0.1	-9.1	0.0
	27	-156.9	776.4	-0.9	0.1	0.6	0.0
8	26	346.2	776.4	-1.1	-0.1	5.7	0.0
	27	-346.2	776.4	1.1	0.1	5.1	0.0
9	26	154.1	776.4	1.0	-0.1	-10.5	0.0
	27	-154.1	776.4	-1.0	0.1	0.3	0.0
10	26	-1755.3	776.4	-1.3	-0.2	-8.1	0.0
	27	1755.3	776.4	1.3	0.2	21.5	0.0
11	26	-119.7	776.4	3.7	-0.1	-30.3	0.0
	27	119.7	776.4	-3.7	0.1	-6.6	0.0
12	26	-26.2	776.4	2.7	-0.1	-23.1	0.0
	27	26.2	776.4	-2.7	0.1	-4.3	0.0
13	26	-102.3	776.4	3.1	-0.1	-24.9	0.0
	27	102.3	776.4	-3.1	0.1	-6.4	0.0
14	26	-446.5	776.4	2.7	-0.1	-25.9	0.0
	27	446.5	776.4	-2.7	0.1	-1.0	0.0
15	26	348.9	776.4	-1.2	-0.1	7.0	0.0
	27	-348.9	776.4	1.2	0.1	5.3	0.0
16	26	331.8	776.4	2.7	0.2	-21.8	0.0
	27	-331.8	776.4	-2.7	-0.2	-5.9	0.0
17	26	356.6	776.4	-2.9	0.4	7.0	0.0
	27	-356.6	776.4	2.9	-0.4	21.6	0.0
1	28	-487.6	1922.7	12.5	0.2	-75.9	0.0
	29	487.6	1922.7	-12.5	-0.2	-61.6	0.0
2	28	-567.4	1922.7	20.3	0.3	-119.1	0.0
	29	567.4	1922.7	-20.3	-0.3	-104.5	0.0
3	28	-481.7	1922.7	12.1	0.2	-74.0	0.0
	29	481.7	1922.7	-12.1	-0.2	-58.8	0.0
4	28	24.6	1922.7	23.1	-0.1	-183.3	0.0
	29	-24.6	1922.7	-23.1	0.1	-70.4	0.0
5	28	-573.1	1479.0	-0.4	0.2	1.7	0.0
	29	573.1	1479.0	0.4	-0.2	3.2	0.0
6	28	-450.0	1479.0	4.4	0.4	-27.5	0.0
	29	450.0	1479.0	-4.4	-0.4	-20.7	0.0
7	28	-350.1	1479.0	8.4	0.1	-51.3	0.0
	29	350.1	1479.0	-8.4	-0.1	-41.0	0.0
8	28	-403.3	1479.0	13.6	0.2	-80.1	0.0
	29	403.3	1479.0	-13.6	-0.2	-69.6	0.0
9	28	-346.2	1479.0	8.1	0.1	-50.1	0.0
	29	346.2	1479.0	-8.1	-0.1	-39.2	0.0
10	28	-8.7	1479.0	15.4	-0.1	-122.9	0.0

Comb.	Nodo	N [kg]	T1-2 [kg]	T1-3 [kg]	Mt [kgm]	M1-3 [kgm]	M1-2 [kgm]
	29	8.7	1479.0	-15.4	0.1	-46.9	0.0
11	28	-244.1	1479.0	0.2	-0.0	-5.9	0.0
	29	244.1	1479.0	-0.2	0.0	3.7	0.0
12	28	-273.2	1479.0	2.8	0.0	-20.4	0.0
	29	273.2	1479.0	-2.8	-0.0	-10.6	0.0
13	28	-221.8	1479.0	0.5	-0.0	-6.6	0.0
	29	221.8	1479.0	-0.5	0.0	0.8	0.0
14	28	-194.3	1479.0	3.2	-0.0	-28.9	0.0
	29	194.3	1479.0	-3.2	0.0	-6.0	0.0
15	28	-407.3	1479.0	13.9	0.2	-81.4	0.0
	29	407.3	1479.0	-13.9	-0.2	-71.5	0.0
16	28	-596.8	1479.0	-0.5	0.2	2.3	0.0
	29	596.8	1479.0	0.5	-0.2	3.4	0.0
17	28	-467.5	1479.0	4.7	0.4	-29.3	0.0
	29	467.5	1479.0	-4.7	-0.4	-22.5	0.0
1	29	-628.0	1009.3	19.5	0.4	-96.0	0.0
	30	628.0	1009.3	-19.5	-0.4	-98.6	0.0
2	29	-701.2	1009.3	28.4	0.6	-146.2	0.0
	30	701.2	1009.3	-28.4	-0.6	-137.4	0.0
3	29	-676.8	1009.3	19.1	0.4	-93.4	0.0
	30	676.8	1009.3	-19.1	-0.4	-97.6	0.0
4	29	-1276.6	1009.3	-0.8	-0.0	19.9	0.0
	30	1276.6	1009.3	0.8	0.0	-11.8	0.0
5	29	-888.7	776.4	10.0	0.5	-42.7	0.0
	30	888.7	776.4	-10.0	-0.5	-57.8	0.0
6	29	-577.4	776.4	11.5	0.7	-55.1	0.0
	30	577.4	776.4	-11.5	-0.7	-60.1	0.0
7	29	-447.7	776.4	13.4	0.3	-65.5	0.0
	30	447.7	776.4	-13.4	-0.3	-68.2	0.0
8	29	-496.4	776.4	19.3	0.4	-98.9	0.0
	30	496.4	776.4	-19.3	-0.4	-94.1	0.0
9	29	-480.2	776.4	13.1	0.3	-63.7	0.0
	30	480.2	776.4	-13.1	-0.3	-67.5	0.0
10	29	-880.0	776.4	-0.1	0.0	11.8	0.0
	30	880.0	776.4	0.1	-0.0	-10.3	0.0
11	29	-375.0	776.4	3.8	0.1	-11.9	0.0
	30	375.0	776.4	-3.8	-0.1	-25.7	0.0
12	29	-402.9	776.4	6.8	0.2	-28.8	0.0
	30	402.9	776.4	-6.8	-0.2	-39.0	0.0
13	29	-281.7	776.4	3.6	0.1	-12.7	0.0
	30	281.7	776.4	-3.6	-0.1	-22.9	0.0
14	29	-479.6	776.4	2.9	0.1	-6.7	0.0
	30	479.6	776.4	-2.9	-0.1	-22.2	0.0
15	29	-463.9	776.4	19.5	0.4	-100.7	0.0
	30	463.9	776.4	-19.5	-0.4	-94.7	0.0
16	29	-941.4	776.4	10.6	0.5	-45.3	0.0

Comb.	Nodo	N [kg]	T1-2 [kg]	T1-3 [kg]	Mt [kgm]	M1-3 [kgm]	M1-2 [kgm]
	30	941.4	776.4	-10.6	-0.5	-61.0	0.0
17	29	-603.4	776.4	12.3	0.7	-59.4	0.0
	30	603.4	776.4	-12.3	-0.7	-64.1	0.0
1	34	184.9	-155.9	-23.3	274.6	60.0	-228.9
	35	-184.9	155.9	23.3	-274.6	4.2	-199.9
2	34	202.2	-120.0	-37.5	446.8	96.8	-178.4
	35	-202.2	120.0	37.5	-446.8	6.3	-151.7
3	34	208.6	-118.1	-20.3	272.9	52.9	-166.2
	35	-208.6	118.1	20.3	-272.9	2.9	-158.5
4	34	327.7	780.2	-406.0	24.5	899.9	1349.0
	35	-327.7	-780.2	406.0	-24.5	216.6	796.4
5	34	-743.9	-702.8	12.7	12.2	-27.0	-1153.6
	35	743.9	702.8	-12.7	-12.2	-7.9	-779.2
6	34	-489.5	-415.1	15.9	34.3	-34.5	-672.7
	35	489.5	415.1	-15.9	-34.3	-9.4	-468.7
7	34	133.0	-116.7	-16.2	184.1	41.5	-172.4
	35	-133.0	116.7	16.2	-184.1	3.1	-148.6
8	34	144.6	-92.8	-25.6	298.9	66.0	-138.7
	35	-144.6	92.8	25.6	-298.9	4.5	-116.4
9	34	148.8	-91.5	-14.2	182.9	36.7	-130.6
	35	-148.8	91.5	14.2	-182.9	2.2	-121.0
10	34	228.2	507.3	-271.3	17.3	601.4	879.6
	35	-228.2	-507.3	271.3	-17.3	144.7	515.6
11	34	124.6	-106.3	-0.2	9.3	0.3	-151.2
	35	-124.6	106.3	0.2	-9.3	0.2	-141.1
12	34	131.2	-96.7	-4.9	66.9	12.5	-137.7
	35	-131.2	96.7	4.9	-66.9	0.9	-128.2
13	34	90.4	-119.4	-3.7	9.3	8.4	-179.4
	35	-90.4	119.4	3.7	-9.3	1.8	-149.0
14	34	147.9	23.4	-54.0	10.6	119.6	66.0
	35	-147.9	-23.4	54.0	-10.6	29.0	-1.8
15	34	128.7	-118.0	-27.7	300.0	70.7	-180.5
	35	-128.7	118.0	27.7	-300.0	5.4	-144.0
16	34	-817.5	-749.2	14.7	12.5	-31.5	-1230.9
	35	817.5	749.2	-14.7	-12.5	-9.0	-829.4
17	34	-545.1	-438.6	19.7	36.4	-42.6	-711.8
	35	545.1	438.6	-19.7	-36.4	-11.5	-494.3
1	35	1354.6	101.1	-2.8	134.1	2.7	163.1
	36	-1354.6	-101.1	2.8	-134.1	4.9	115.0
2	35	2024.8	83.8	-3.1	219.5	5.2	132.2
	36	-2024.8	-83.8	3.1	-219.5	3.3	98.4
3	35	1366.8	130.8	-2.6	133.5	4.0	192.7
	36	-1366.8	-130.8	2.6	-133.5	3.2	167.1
4	35	-1381.5	674.8	95.2	-8.7	-216.3	936.3
	36	1381.5	-674.8	-95.2	8.7	-45.6	919.4

Comb.	Nodo	N [kg]	T1-2 [kg]	T1-3 [kg]	Mt [kgm]	M1-3 [kgm]	M1-2 [kgm]
5	35	-357.5	-342.4	-5.9	16.0	8.0	-431.8
	36	357.5	342.4	5.9	-16.0	8.7	-510.0
6	35	-93.6	-159.3	-5.9	25.5	9.5	-185.8
	36	93.6	159.3	5.9	-25.5	8.1	-252.3
7	35	922.4	68.9	-2.0	89.9	1.5	114.0
	36	-922.4	-68.9	2.0	-89.9	3.9	75.6
8	35	1369.2	57.4	-2.2	146.9	3.1	93.4
	36	-1369.2	-57.4	2.2	-146.9	2.8	64.5
9	35	930.5	88.7	-1.9	89.5	2.4	133.8
	36	-930.5	-88.7	1.9	-89.5	2.7	110.3
10	35	-901.7	451.4	63.4	-5.3	-144.5	629.5
	36	901.7	-451.4	-63.4	5.3	-29.8	611.8
11	35	234.8	91.9	-1.3	3.8	-0.2	142.7
	36	-234.8	-91.9	1.3	-3.8	3.8	109.9
12	35	461.0	87.7	-1.4	32.3	0.6	134.8
	36	-461.0	-87.7	1.4	-32.3	3.3	106.3
13	35	189.0	41.9	-1.1	4.0	-1.7	82.8
	36	-189.0	-41.9	1.1	-4.0	4.9	32.5
14	35	6.9	166.5	11.7	1.8	-28.9	242.1
	36	-6.9	-166.5	-11.7	-1.8	-3.2	215.7
15	35	1361.1	37.6	-2.3	147.3	2.3	73.7
	36	-1361.1	-37.6	2.3	-147.3	4.0	29.8
16	35	-405.2	-372.3	-6.4	16.9	9.1	-471.9
	36	405.2	372.3	6.4	-16.9	9.0	-551.9
17	35	-121.8	-174.6	-6.8	27.2	11.6	-206.4
	36	121.8	174.6	6.8	-27.2	8.4	-273.7
1	36	1922.2	-65.9	15.0	-100.1	-4.6	10.5
	37	-1922.2	65.9	-15.0	100.1	-36.8	-192.0
2	36	2914.0	-64.8	18.5	-174.7	-2.8	1.6
	37	-2914.0	64.8	-18.5	174.7	-48.2	-180.1
3	36	1936.3	-99.8	11.7	-99.4	-2.8	-44.8
	37	-1936.3	99.8	-11.7	99.4	-29.4	-229.9
4	36	-2096.5	512.5	-16.6	2.8	45.4	827.8
	37	2096.5	-512.5	16.6	-2.8	0.3	583.4
5	36	9.8	-364.5	10.0	6.1	-8.6	-437.0
	37	-9.8	364.5	-10.0	-6.1	-19.8	-566.5
6	36	594.2	-183.9	5.6	-9.4	-7.9	-181.4
	37	-594.2	183.9	-5.6	9.4	-10.1	-325.2
7	36	1303.5	-41.8	10.9	-66.1	-3.6	19.4
	37	-1303.5	41.8	-10.9	66.1	-26.4	-134.5
8	36	1964.7	-41.1	13.2	-115.8	-2.4	13.4
	37	-1964.7	41.1	-13.2	115.8	-34.0	-126.5
9	36	1312.9	-64.3	8.7	-65.6	-2.5	-17.5
	37	-1312.9	64.3	-8.7	65.6	-21.5	-159.7
10	36	-1375.6	343.8	-10.2	2.5	29.7	564.2
	37	1375.6	-343.8	10.2	-2.5	-1.7	382.5

Comb.	Nodo	N [kg]	T1-2 [kg]	T1-3 [kg]	Mt [kgm]	M1-3 [kgm]	M1-2 [kgm]
11	36	285.8	-56.1	4.4	8.1	-3.7	-1.5
	37	-285.8	56.1	-4.4	-8.1	-8.5	-152.8
12	36	620.3	-56.7	5.7	-16.7	-3.1	-5.3
	37	-620.3	56.7	-5.7	16.7	-12.5	-150.9
13	36	225.3	-7.9	7.0	6.3	-4.8	66.7
	37	-225.3	7.9	-7.0	-6.3	-14.4	-88.3
14	36	-47.8	20.2	1.0	7.0	3.3	104.9
	37	47.8	-20.2	-1.0	-7.0	-6.1	-49.1
15	36	1955.3	-18.5	15.4	-116.2	-3.6	50.3
	37	-1955.3	18.5	-15.4	116.2	-38.8	-101.3
16	36	-7.3	-393.9	10.1	6.2	-8.9	-478.6
	37	7.3	393.9	-10.1	-6.2	-19.9	-606.0
17	36	631.1	-199.1	5.3	-10.7	-8.2	-202.7
	37	-631.1	199.1	-5.3	10.7	-9.0	-345.5
1	37	2619.8	766.0	24.9	-225.1	30.0	941.5
	38	-2619.8	-766.0	-24.9	225.1	-98.4	1162.3
2	37	3748.0	679.1	34.2	-403.9	36.7	836.8
	38	-3748.0	-679.1	-34.2	403.9	-130.5	1028.5
3	37	2607.6	742.6	33.5	-227.5	22.7	918.4
	38	-2607.6	-742.6	-33.5	227.5	-114.7	1121.3
4	37	-2249.2	1668.2	19.9	33.4	-0.0	1916.9
	38	2249.2	-1668.2	-19.9	-33.4	-54.6	2665.0
5	37	1013.3	-66.3	-2.2	12.3	19.8	-2.2
	38	-1013.3	66.3	2.2	-12.3	-13.7	-179.9
6	37	1451.9	234.0	16.0	-1.3	10.0	322.6
	38	-1451.9	-234.0	-16.0	1.3	-55.0	320.1
7	37	1799.9	572.5	16.5	-147.4	21.9	702.6
	38	-1799.9	-572.5	-16.5	147.4	-67.1	870.0
8	37	2552.0	514.6	22.7	-266.6	26.3	632.7
	38	-2552.0	-514.6	-22.7	266.6	-88.6	780.9
9	37	1791.8	557.0	22.2	-149.0	17.0	687.1
	38	-1791.8	-557.0	-22.2	149.0	-78.0	842.7
10	37	-1446.1	1174.0	13.1	25.0	1.8	1352.8
	38	1446.1	-1174.0	-13.1	-25.0	-38.0	1871.8
11	37	591.7	589.7	12.4	26.5	8.7	724.7
	38	-591.7	-589.7	-12.4	-26.5	-42.7	894.9
12	37	975.8	566.7	15.5	-32.7	11.1	697.3
	38	-975.8	-566.7	-15.5	32.7	-53.8	859.3
13	37	512.1	544.8	2.4	24.8	14.5	662.9
	38	-512.1	-544.8	-2.4	-24.8	-21.2	833.4
14	37	176.1	698.6	13.6	25.6	6.2	841.3
	38	-176.1	-698.6	-13.6	-25.6	-43.7	1077.5
15	37	2560.2	530.2	16.9	-265.0	31.2	648.2
	38	-2560.2	-530.2	-16.9	265.0	-77.7	808.2
16	37	1063.8	-114.6	-2.1	11.2	20.0	-54.5
	38	-1063.8	114.6	2.1	-11.2	-14.1	-260.2

Comb.	Nodo	N [kg]	T1-2 [kg]	T1-3 [kg]	Mt [kgm]	M1-3 [kgm]	M1-2 [kgm]
17	37	1542.1	209.7	18.1	-3.4	8.9	296.2
	38	-1542.1	-209.7	-18.1	3.4	-59.7	279.7
1	41	392.8	16.4	118.8	7.5	-262.0	91.4
	42	-392.8	-16.4	-118.8	-7.5	-64.7	-46.4
2	41	385.0	14.3	185.6	17.0	-409.3	80.5
	42	-385.0	-14.3	-185.6	-17.0	-101.1	-41.1
3	41	436.8	15.3	120.5	8.9	-265.4	85.5
	42	-436.8	-15.3	-120.5	-8.9	-65.9	-43.5
4	41	-9836.7	126.1	304.0	-6.7	-669.8	731.5
	42	9836.7	-126.1	-304.0	6.7	-166.3	-384.7
5	41	-597.3	-44.3	1.4	2.1	-3.2	-240.8
	42	597.3	44.3	-1.4	-2.1	-0.6	118.8
6	41	-203.0	-13.5	38.4	7.7	-86.0	-72.3
	42	203.0	13.5	-38.4	-7.7	-19.7	35.2
7	41	284.4	12.4	80.2	4.6	-177.0	68.9
	42	-284.4	-12.4	-80.2	-4.6	-43.7	-34.9
8	41	279.3	11.0	124.8	10.9	-275.2	61.7
	42	-279.3	-11.0	-124.8	-10.9	-67.9	-31.4
9	41	313.7	11.6	81.4	5.5	-179.2	65.0
	42	-313.7	-11.6	-81.4	-5.5	-44.5	-33.0
10	41	-6535.2	85.5	203.7	-4.9	-448.9	495.7
	42	6535.2	-85.5	-203.7	4.9	-111.4	-260.5
11	41	297.4	12.5	13.4	-3.3	-29.4	69.7
	42	-297.4	-12.5	-13.4	3.3	-7.4	-35.2
12	41	297.5	12.0	35.8	-0.2	-78.8	66.8
	42	-297.5	-12.0	-35.8	0.2	-19.6	-33.8
13	41	219.4	12.3	10.1	-3.9	-22.4	68.2
	42	-219.4	-12.3	-10.1	3.9	-5.4	-34.3
14	41	-1065.4	26.9	51.6	-3.3	-113.5	153.6
	42	1065.4	-26.9	-51.6	3.3	-28.3	-79.6
15	41	249.9	11.7	123.7	9.9	-273.0	65.6
	42	-249.9	-11.7	-123.7	-9.9	-67.2	-33.3
16	41	-648.7	-48.9	0.7	2.6	-1.7	-265.5
	42	648.7	48.9	-0.7	-2.6	-0.3	131.1
17	41	-232.7	-15.5	40.9	8.6	-91.5	-83.5
	42	232.7	15.5	-40.9	-8.6	-21.0	40.8
1	42	-252.4	16.4	-19.5	7.5	64.7	46.4
	43	252.4	-16.4	19.5	-7.5	-11.1	-1.4
2	42	-372.1	14.3	-30.2	17.0	101.1	41.1
	43	372.1	-14.3	30.2	-17.0	-18.0	-1.6
3	42	-202.5	15.3	-20.3	8.9	65.9	43.5
	43	202.5	-15.3	20.3	-8.9	-10.1	-1.5
4	42	-6987.9	126.1	-76.3	-6.7	166.3	384.7
	43	6987.9	-126.1	76.3	6.7	43.6	-37.9
5	42	-1090.4	-44.3	1.2	2.1	0.6	-118.8

Comb.	Nodo	N [kg]	T1-2 [kg]	T1-3 [kg]	Mt [kgm]	M1-3 [kgm]	M1-2 [kgm]
	43	1090.4	44.3	-1.2	-2.1	-5.4	-3.4
6	42	-564.0	-13.5	-6.5	7.7	19.7	-35.2
	43	564.0	13.5	6.5	-7.7	-6.1	-1.9
7	42	-177.0	12.4	-13.1	4.6	43.7	34.9
	43	177.0	-12.4	13.1	-4.6	-7.6	-1.0
8	42	-256.7	11.0	-20.3	10.9	67.9	31.4
	43	256.7	-11.0	20.3	-10.9	-12.1	-1.1
9	42	-143.7	11.6	-13.7	5.5	44.5	33.0
	43	143.7	-11.6	13.7	-5.5	-6.9	-1.0
10	42	-4667.3	85.5	-51.0	-4.9	111.4	260.5
	43	4667.3	-85.5	51.0	4.9	28.9	-25.3
11	42	-17.5	12.5	-2.7	-3.3	7.4	35.2
	43	17.5	-12.5	2.7	3.3	0.0	-0.7
12	42	-58.1	12.0	-6.3	-0.2	19.6	33.8
	43	58.1	-12.0	6.3	0.2	-2.2	-0.8
13	42	-62.4	12.3	-1.6	-3.9	5.4	34.3
	43	62.4	-12.3	1.6	3.9	-0.9	-0.5
14	42	-940.2	26.9	-12.5	-3.3	28.3	79.6
	43	940.2	-26.9	12.5	3.3	6.0	-5.6
15	42	-290.0	11.7	-19.8	9.9	67.2	33.3
	43	290.0	-11.7	19.8	-9.9	-12.8	-1.0
16	42	-1166.9	-48.9	1.4	2.6	0.3	-131.1
	43	1166.9	48.9	-1.4	-2.6	-5.7	-3.6
17	42	-601.8	-15.5	-6.9	8.6	21.0	-40.8
	43	601.8	15.5	6.9	-8.6	-6.5	-2.1
1	43	-1169.8	16.4	-23.5	7.5	11.1	1.4
	44	1169.8	-16.4	23.5	-7.5	53.5	43.7
2	43	-1418.3	14.3	-37.6	17.0	18.0	1.6
	44	1418.3	-14.3	37.6	-17.0	85.7	37.9
3	43	-1102.0	15.3	-22.2	8.9	10.1	1.5
	44	1102.0	-15.3	22.2	-8.9	50.9	40.5
4	43	-5079.1	126.1	20.9	-6.7	-43.6	37.9
	44	5079.1	-126.1	-20.9	6.7	-13.8	309.3
5	43	-1771.9	-44.3	-7.5	2.1	5.4	3.4
	44	1771.9	44.3	7.5	-2.1	16.1	-125.2
6	43	-1126.0	-13.5	-12.1	7.7	6.1	1.9
	44	1126.0	13.5	12.1	-7.7	27.9	-38.9
7	43	-836.6	12.4	-15.9	4.6	7.6	1.0
	44	836.6	-12.4	15.9	-4.6	36.2	33.1
8	43	-1002.3	11.0	-25.4	10.9	12.1	1.1
	44	1002.3	-11.0	25.4	-10.9	57.7	29.2
9	43	-791.4	11.6	-15.0	5.5	6.9	1.0
	44	791.4	-11.6	15.0	-5.5	34.5	31.0
10	43	-3442.7	85.5	13.6	-4.9	-28.9	25.3
	44	3442.7	-85.5	-13.6	4.9	-8.6	210.2
11	43	-489.4	12.5	-0.7	-3.3	-0.0	0.7

Comb.	Nodo	N [kg]	T1-2 [kg]	T1-3 [kg]	Mt [kgm]	M1-3 [kgm]	M1-2 [kgm]
	44	489.4	-12.5	0.7	3.3	2.0	33.8
12	43	-578.1	12.0	-5.4	-0.2	2.2	0.8
	44	578.1	-12.0	5.4	0.2	12.7	32.2
13	43	-492.8	12.3	-1.9	-3.9	0.9	0.5
	44	492.8	-12.3	1.9	3.9	4.2	33.4
14	43	-1066.2	26.9	2.4	-3.3	-6.0	5.6
	44	1066.2	-26.9	-2.4	3.3	-0.5	68.4
15	43	-1047.5	11.7	-26.2	9.9	12.8	1.0
	44	1047.5	-11.7	26.2	-9.9	59.4	31.3
16	43	-1872.7	-48.9	-7.9	2.6	5.7	3.6
	44	1872.7	48.9	7.9	-2.6	17.1	-137.9
17	43	-1177.1	-15.5	-12.9	8.6	6.5	2.1
	44	1177.1	15.5	12.9	-8.6	29.8	-44.7
1	44	-686.6	16.4	75.8	7.5	-53.5	-43.7
	45	686.6	-16.4	-75.8	-7.5	-154.8	88.6
2	44	-914.4	14.3	133.0	17.0	-85.7	-37.9
	45	914.4	-14.3	-133.0	-17.0	-279.5	77.3
3	44	-745.8	15.3	73.2	8.9	-50.9	-40.5
	45	745.8	-15.3	-73.2	-8.9	-150.1	82.5
4	44	-3239.0	126.1	-22.8	-6.7	13.8	-309.3
	45	3239.0	-126.1	22.8	6.7	48.9	655.7
5	44	-1716.5	-44.3	14.8	2.1	-16.1	125.2
	45	1716.5	44.3	-14.8	-2.1	-24.6	-247.1
6	44	-866.7	-13.5	34.3	7.7	-27.9	38.9
	45	866.7	13.5	-34.3	-7.7	-66.4	-75.9
7	44	-477.4	12.4	50.3	4.6	-36.2	-33.1
	45	477.4	-12.4	-50.3	-4.6	-101.8	67.0
8	44	-629.2	11.0	88.3	10.9	-57.7	-29.2
	45	629.2	-11.0	-88.3	-10.9	-185.0	59.4
9	44	-516.8	11.6	48.5	5.5	-34.5	-31.0
	45	516.8	-11.6	-48.5	-5.5	-98.7	62.9
10	44	-2179.0	85.5	-15.5	-4.9	8.6	-210.2
	45	2179.0	-85.5	15.5	4.9	34.0	445.0
11	44	-272.8	12.5	-7.9	-3.3	-2.0	-33.8
	45	272.8	-12.5	7.9	3.3	23.6	68.3
12	44	-350.5	12.0	11.1	-0.2	-12.7	-32.2
	45	350.5	-12.0	-11.1	0.2	-17.7	65.2
13	44	-188.8	12.3	-4.1	-3.9	-4.2	-33.4
	45	188.8	-12.3	4.1	3.9	15.5	67.2
14	44	-660.5	26.9	-9.7	-3.3	0.5	-68.4
	45	660.5	-26.9	9.7	3.3	26.0	142.3
15	44	-589.8	11.7	90.1	9.9	-59.4	-31.3
	45	589.8	-11.7	-90.1	-9.9	-188.1	63.5
16	44	-1838.9	-48.9	16.3	2.6	-17.1	137.9
	45	1838.9	48.9	-16.3	-2.6	-27.7	-272.2
17	44	-922.1	-15.5	37.3	8.6	-29.8	44.7

Comb.	Nodo	N [kg]	T1-2 [kg]	T1-3 [kg]	Mt [kgm]	M1-3 [kgm]	M1-2 [kgm]
	45	922.1	15.5	-37.3	-8.6	-73.0	-87.3
1	47	-1478.4	27.3	-61.7	1.3	143.4	157.0
	48	1478.4	-27.3	61.7	-1.3	26.2	-82.0
2	47	-2212.4	28.0	-62.9	4.4	150.2	163.6
	48	2212.4	-28.0	62.9	-4.4	22.7	-86.7
3	47	-1513.1	27.8	-70.7	2.4	163.1	160.2
	48	1513.1	-27.8	70.7	-2.4	31.4	-83.8
4	47	1179.0	110.1	-4.8	-4.9	-5.6	617.5
	48	-1179.0	-110.1	4.8	4.9	18.8	-314.7
5	47	-1350.9	-29.3	-10.5	5.6	24.0	-160.3
	48	1350.9	29.3	10.5	-5.6	4.7	79.7
6	47	-155.3	20.7	0.2	11.6	0.9	113.8
	48	155.3	-20.7	-0.2	-11.6	-1.5	-56.9
7	47	-999.0	20.1	-42.7	0.7	99.1	115.5
	48	999.0	-20.1	42.7	-0.7	18.2	-60.1
8	47	-1488.4	20.6	-43.5	2.8	103.7	119.8
	48	1488.4	-20.6	43.5	-2.8	15.9	-63.2
9	47	-1022.2	20.5	-48.7	1.5	112.3	117.6
	48	1022.2	-20.5	48.7	-1.5	21.6	-61.3
10	47	772.6	75.4	-4.8	-3.4	-0.2	422.4
	48	-772.6	-75.4	4.8	3.4	13.3	-215.2
11	47	-251.9	18.6	-41.4	-1.1	91.9	104.3
	48	251.9	-18.6	41.4	1.1	21.8	-53.1
12	47	-500.6	19.0	-42.4	-0.2	95.7	107.3
	48	500.6	-19.0	42.4	0.2	21.0	-55.0
13	47	-168.0	16.6	-23.8	-1.7	53.4	92.3
	48	168.0	-16.6	23.8	1.7	12.1	-46.7
14	47	-48.4	29.9	-34.7	-1.4	74.9	167.8
	48	48.4	-29.9	34.7	1.4	20.5	-85.4
15	47	-1465.2	20.3	-37.5	2.0	90.6	117.7
	48	1465.2	-20.3	37.5	-2.0	12.5	-62.0
16	47	-1457.9	-32.9	-8.8	6.2	20.2	-180.3
	48	1457.9	32.9	8.8	-6.2	3.8	89.7
17	47	-153.5	21.1	3.9	12.7	-7.3	115.8
	48	153.5	-21.1	-3.9	-12.7	-3.5	-57.9
1	48	-2060.5	27.3	14.2	1.3	-26.2	82.0
	49	2060.5	-27.3	-14.2	-1.3	-12.7	-6.9
2	48	-3399.9	28.0	14.3	4.4	-22.7	86.7
	49	3399.9	-28.0	-14.3	-4.4	-16.6	-9.8
3	48	-2094.9	27.8	16.7	2.4	-31.4	83.8
	49	2094.9	-27.8	-16.7	-2.4	-14.6	-7.4
4	48	-1841.9	110.1	9.5	-4.9	-18.8	314.7
	49	1841.9	-110.1	-9.5	4.9	-7.3	-11.9
5	48	-1256.7	-29.3	1.7	5.6	-4.7	-79.7
	49	1256.7	29.3	-1.7	-5.6	-0.5	-3.1

Comb.	Nodo	N [kg]	T1-2 [kg]	T1-3 [kg]	Mt [kgm]	M1-3 [kgm]	M1-2 [kgm]
6	48	-827.2	20.7	-0.6	11.6	1.5	56.9
	49	827.2	-20.7	0.6	-11.6	-3.0	-3.3
7	48	-1366.8	20.1	9.7	0.7	-18.2	60.1
	49	1366.8	-20.1	-9.7	-0.7	-8.5	-4.7
8	48	-2259.7	20.6	9.8	2.8	-15.9	63.2
	49	2259.7	-20.6	-9.8	-2.8	-11.1	-6.6
9	48	-1389.7	20.5	11.4	1.5	-21.6	61.3
	49	1389.7	-20.5	-11.4	-1.5	-9.8	-5.0
10	48	-1221.1	75.4	6.6	-3.4	-13.3	215.2
	49	1221.1	-75.4	-6.6	3.4	-4.9	-8.0
11	48	-35.9	18.6	9.8	-1.1	-21.8	53.1
	49	35.9	-18.6	-9.8	1.1	-5.1	-1.9
12	48	-484.0	19.0	10.0	-0.2	-21.0	55.0
	49	484.0	-19.0	-10.0	0.2	-6.4	-2.8
13	48	19.4	16.6	5.1	-1.7	-12.1	46.7
	49	-19.4	-16.6	-5.1	1.7	-1.9	-1.0
14	48	-276.3	29.9	9.4	-1.4	-20.5	85.4
	49	276.3	-29.9	-9.4	1.4	-5.2	-3.1
15	48	-2236.8	20.3	8.1	2.0	-12.5	62.0
	49	2236.8	-20.3	-8.1	-2.0	-9.8	-6.3
16	48	-1368.5	-32.9	1.3	6.2	-3.8	-89.7
	49	1368.5	32.9	-1.3	-6.2	1.0	-3.4
17	48	-902.5	21.1	-1.5	12.7	3.5	57.9
	49	902.5	-21.1	1.5	-12.7	1.8	-3.6
1	49	-1595.4	27.3	-10.7	1.3	12.7	6.9
	50	1595.4	-27.3	10.7	-1.3	16.6	68.2
2	49	-3065.6	28.0	-13.4	4.4	16.6	9.8
	50	3065.6	-28.0	13.4	-4.4	20.4	67.2
3	49	-1671.4	27.8	-11.8	2.4	14.6	7.4
	50	1671.4	-27.8	11.8	-2.4	17.7	69.1
4	49	-2923.1	110.1	-12.8	-4.9	7.3	11.9
	50	2923.1	-110.1	12.8	4.9	28.0	291.3
5	49	-730.1	-29.3	-0.3	5.6	0.5	3.1
	50	730.1	29.3	0.3	-5.6	0.4	-81.6
6	49	-663.0	20.7	-4.7	11.6	3.0	3.3
	50	663.0	-20.7	4.7	-11.6	11.0	57.0
7	49	-1011.3	20.1	-7.2	0.7	8.5	4.7
	50	1011.3	-20.1	7.2	-0.7	11.4	50.8
8	49	-1991.4	20.6	-9.1	2.8	11.1	6.6
	50	1991.4	-20.6	9.1	-2.8	13.9	50.1
9	49	-1062.0	20.5	-8.0	1.5	9.8	5.0
	50	1062.0	-20.5	8.0	-1.5	12.2	51.3
10	49	-1896.4	75.4	-8.7	-3.4	4.9	8.0
	50	1896.4	-75.4	8.7	3.4	19.0	199.5
11	49	378.0	18.6	-4.5	-1.1	5.1	1.9
	50	-378.0	-18.6	4.5	1.1	7.2	49.4

Comb.	Nodo	N [kg]	T1-2 [kg]	T1-3 [kg]	Mt [kgm]	M1-3 [kgm]	M1-2 [kgm]
12	49	-108.7	19.0	-5.5	-0.2	6.4	2.8
	50	108.7	-19.0	5.5	0.2	8.6	49.4
13	49	420.3	16.6	-2.4	-1.7	1.9	1.0
	50	-420.3	-16.6	2.4	1.7	4.6	44.7
14	49	-89.7	29.9	-5.4	-1.4	5.2	3.1
	50	89.7	-29.9	5.4	1.4	9.6	79.3
15	49	-1940.7	20.3	-8.4	2.0	9.8	6.3
	50	1940.7	-20.3	8.4	-2.0	13.2	49.5
16	49	-830.6	-32.9	-0.2	6.2	-1.0	3.4
	50	830.6	32.9	0.2	-6.2	0.2	-91.6
17	49	-761.4	21.1	-5.0	12.7	-1.8	3.6
	50	761.4	-21.1	5.0	-12.7	11.7	58.1
1	50	-1588.0	27.3	39.7	1.3	-16.6	-68.2
	51	1588.0	-27.3	-39.7	-1.3	-92.5	143.2
2	50	-3002.4	28.0	57.0	4.4	-20.4	-67.2
	51	3002.4	-28.0	-57.0	-4.4	-136.2	144.0
3	50	-1629.0	27.8	41.8	2.4	-17.7	-69.1
	51	1629.0	-27.8	-41.8	-2.4	-97.1	145.4
4	50	-3845.6	110.1	46.2	-4.9	-28.0	-291.3
	51	3845.6	-110.1	-46.2	4.9	-99.0	593.7
5	50	-596.0	-29.3	-4.5	5.6	-0.4	81.6
	51	596.0	29.3	4.5	-5.6	12.7	-162.1
6	50	-966.8	20.7	18.8	11.6	-11.0	-57.0
	51	966.8	-20.7	-18.8	-11.6	-40.8	113.8
7	50	-1009.6	20.1	26.7	0.7	-11.4	-50.8
	51	1009.6	-20.1	-26.7	-0.7	-61.9	106.1
8	50	-1952.5	20.6	38.2	2.8	-13.9	-50.1
	51	1952.5	-20.6	-38.2	-2.8	-91.0	106.7
9	50	-1036.9	20.5	28.1	1.5	-12.2	-51.3
	51	1036.9	-20.5	-28.1	-1.5	-65.0	107.6
10	50	-2514.6	75.4	31.0	-3.4	-19.0	-199.5
	51	2514.6	-75.4	-31.0	3.4	-66.2	406.5
11	50	361.1	18.6	9.1	-1.1	-7.2	-49.4
	51	-361.1	-18.6	-9.1	1.1	-17.9	100.6
12	50	-108.5	19.0	15.1	-0.2	-8.6	-49.4
	51	108.5	-19.0	-15.1	0.2	-32.8	101.6
13	50	383.7	16.6	4.8	-1.7	-4.6	-44.7
	51	-383.7	-16.6	-4.8	1.7	-8.5	90.4
14	50	-221.0	29.9	13.6	-1.4	-9.6	-79.3
	51	221.0	-29.9	-13.6	1.4	-27.9	161.5
15	50	-1925.1	20.3	36.8	2.0	-13.2	-49.5
	51	1925.1	-20.3	-36.8	-2.0	-88.0	105.2
16	50	-684.5	-32.9	-5.0	6.2	-0.2	91.6
	51	684.5	32.9	5.0	-6.2	14.0	-182.1
17	50	-1092.5	21.1	20.4	12.7	-11.7	-58.1
	51	1092.5	-21.1	-20.4	-12.7	-44.4	115.9

Comb.	Nodo	N [kg]	T1-2 [kg]	T1-3 [kg]	Mt [kgm]	M1-3 [kgm]	M1-2 [kgm]
1	52	1560.9	1070.7	119.4	525.3	-145.4	1511.7
	53	-1560.9	-1033.3	45.1	-525.3	52.4	1121.8
2	52	2220.8	943.0	186.1	905.1	-196.5	1328.4
	53	-2220.8	-905.5	88.1	-905.1	73.9	985.4
3	52	1815.8	1253.2	130.5	523.6	-163.9	1777.5
	53	-1815.8	-1215.8	34.1	-523.6	43.3	1312.9
4	52	533.3	1974.7	-24.3	-39.1	22.2	2880.1
	53	-533.3	-1937.3	24.3	39.1	38.6	2016.4
5	52	-931.5	-113.0	23.6	13.0	-67.5	-233.8
	53	931.5	141.8	-23.6	-13.0	14.2	-85.0
6	52	330.7	190.8	27.4	50.3	-76.1	226.5
	53	-330.7	-162.0	-27.4	-50.3	27.7	215.2
7	52	1049.0	768.2	79.8	347.9	-99.6	1083.2
	53	-1049.0	-739.4	29.9	-347.9	37.0	803.8
8	52	1488.9	683.0	124.3	601.1	-133.7	960.9
	53	-1488.9	-654.2	58.5	-601.1	51.4	712.9
9	52	1219.0	889.9	87.2	346.8	-112.0	1260.4
	53	-1219.0	-861.1	22.5	-346.8	31.0	931.3
10	52	363.9	1370.8	-16.0	-28.4	12.1	1995.4
	53	-363.9	-1342.0	16.0	28.4	27.9	1400.2
11	52	518.9	923.4	19.4	-29.5	-56.7	1308.9
	53	-518.9	-894.6	-19.4	29.5	8.1	966.6
12	52	743.3	891.3	41.8	96.7	-74.2	1262.8
	53	-743.3	-862.5	-5.2	-96.7	15.4	932.4
13	52	195.3	607.2	6.3	-23.2	-31.6	851.6
	53	-195.3	-578.4	-6.3	23.2	15.9	632.4
14	52	518.3	1028.8	13.7	-29.2	-45.1	1469.7
	53	-518.3	-1000.0	-13.7	29.2	10.7	1069.8
15	52	1319.0	561.3	116.9	602.2	-121.3	783.7
	53	-1319.0	-532.5	65.9	-602.2	57.4	585.5
16	52	-1008.7	-164.9	25.9	16.2	-71.9	-312.5
	53	1008.7	193.7	-25.9	-16.2	14.1	-136.4
17	52	368.3	163.0	31.0	57.4	-83.1	184.3
	53	-368.3	-134.2	-31.0	-57.4	29.4	187.6
1	53	389.5	597.7	35.0	147.4	-48.0	567.8
	54	-389.5	-597.7	-35.0	-147.4	-39.4	926.3
2	53	1316.4	503.5	52.0	259.1	-66.2	471.9
	54	-1316.4	-503.5	-52.0	-259.1	-63.8	786.8
3	53	255.7	741.5	30.2	144.4	-39.0	712.9
	54	-255.7	-741.5	-30.2	-144.4	-36.4	1140.9
4	53	-1509.1	1382.8	16.7	-25.1	-39.1	1578.4
	54	1509.1	-1382.8	-16.7	25.1	-2.7	1878.7
5	53	-728.6	-267.2	8.2	13.2	-14.2	-425.5
	54	728.6	267.2	-8.2	-13.2	-9.3	-242.4
6	53	-115.4	-18.3	15.7	29.7	-27.5	-108.7

Comb.	Nodo	N [kg]	T1-2 [kg]	T1-3 [kg]	Mt [kgm]	M1-3 [kgm]	M1-2 [kgm]
	54	115.4	18.3	-15.7	-29.7	-14.6	63.1
7	53	222.0	424.0	24.4	97.6	-34.1	403.1
	54	-222.0	-424.0	-24.4	-97.6	-26.8	656.8
8	53	840.0	361.2	35.8	172.0	-46.3	339.2
	54	-840.0	-361.2	-35.8	-172.0	-43.1	563.7
9	53	132.9	519.9	21.2	95.6	-28.1	499.8
	54	-132.9	-519.9	-21.2	-95.6	-24.8	799.8
10	53	-1043.7	947.4	12.2	-17.4	-28.3	1076.8
	54	1043.7	-947.4	-12.2	17.4	-2.3	1291.7
11	53	-708.3	554.7	3.5	-14.3	-8.4	539.6
	54	708.3	-554.7	-3.5	14.3	-0.3	847.0
12	53	-408.9	529.9	9.3	22.7	-14.7	513.9
	54	408.9	-529.9	-9.3	-22.7	-8.5	810.8
13	53	-455.1	324.7	7.8	-8.9	-16.2	312.6
	54	455.1	-324.7	-7.8	8.9	-3.4	499.1
14	53	-785.6	647.1	4.6	-15.2	-11.1	661.4
	54	785.6	-647.1	-4.6	15.2	-0.3	956.4
15	53	929.2	265.3	39.0	174.0	-52.3	242.5
	54	-929.2	-265.3	-39.0	-174.0	-45.1	420.7
16	53	-747.9	-311.2	8.2	15.0	-14.1	-481.7
	54	747.9	311.2	-8.2	-15.0	-9.8	-296.3
17	53	-81.0	-42.2	16.6	32.9	-29.2	-139.3
	54	81.0	42.2	-16.6	-32.9	-15.6	33.8
1	54	-123.4	-541.7	-40.3	-145.3	39.4	-864.7
	55	123.4	541.7	40.3	145.3	61.1	-486.0
2	54	601.8	-487.1	-74.4	-247.7	63.8	-771.0
	55	-601.8	487.1	74.4	247.7	121.8	-443.5
3	54	-316.6	-666.7	-37.8	-144.6	36.3	-1057.7
	55	316.6	666.7	37.8	144.6	58.0	-604.7
4	54	-2469.4	334.1	16.0	-3.5	2.5	215.4
	55	2469.4	-334.1	-16.0	3.5	-42.5	617.5
5	54	-105.2	-720.8	-6.6	18.2	9.4	-978.2
	55	105.2	720.8	6.6	-18.2	7.3	-819.0
6	54	-111.4	-468.2	-14.2	28.0	14.8	-668.2
	55	111.4	468.2	14.2	-28.0	21.2	-499.2
7	54	-132.8	-373.6	-26.6	-96.6	26.8	-601.1
	55	132.8	373.6	26.6	96.6	39.6	-330.5
8	54	350.6	-337.2	-49.4	-164.8	43.1	-538.6
	55	-350.6	337.2	49.4	164.8	80.1	-302.1
9	54	-261.6	-457.0	-25.0	-96.1	24.8	-729.7
	55	261.6	457.0	25.0	96.1	37.5	-409.6
10	54	-1696.9	210.2	10.9	-2.0	2.2	119.0
	55	1696.9	-210.2	-10.9	2.0	-29.5	405.2
11	54	-896.8	-447.0	8.1	5.4	0.3	-725.4
	55	896.8	447.0	-8.1	-5.4	-20.6	-389.2
12	54	-665.1	-436.0	-3.1	-28.6	8.4	-705.1

Comb.	Nodo	N [kg]	T1-2 [kg]	T1-3 [kg]	Mt [kgm]	M1-3 [kgm]	M1-2 [kgm]
	55	665.1	436.0	3.1	28.6	-0.6	-382.0
13	54	-574.8	-230.4	4.2	3.6	3.4	-393.2
	55	574.8	230.4	-4.2	-3.6	-13.8	-181.3
14	54	-1074.6	-326.5	8.9	3.9	0.2	-573.5
	55	1074.6	326.5	-8.9	-3.9	-22.5	-240.5
15	54	479.4	-253.9	-51.0	-165.3	45.1	-410.0
	55	-479.4	253.9	51.0	165.3	82.1	-223.0
16	54	-78.6	-765.1	-7.4	19.6	9.9	-1032.3
	55	78.6	765.1	7.4	-19.6	9.0	-875.3
17	54	-79.2	-492.1	-15.7	30.4	15.8	-697.3
	55	79.2	492.1	15.7	-30.4	24.0	-529.6
1	55	589.5	-1034.8	152.2	-505.8	-65.3	-1141.5
	56	-589.5	1072.2	12.4	505.8	-109.7	-1495.8
2	55	643.9	-907.2	297.8	-859.5	-129.1	-1003.4
	56	-643.9	944.6	-23.6	859.5	-273.2	-1314.5
3	55	640.7	-1213.6	146.8	-504.6	-62.2	-1332.5
	56	-640.7	1251.0	17.7	504.6	-99.5	-1752.4
4	55	-1951.9	-24.4	-86.2	15.1	42.6	-139.4
	56	1951.9	61.8	86.2	-15.1	173.1	31.5
5	55	1258.7	-1161.6	7.5	3.0	-7.3	-1221.2
	56	-1258.7	1190.4	-7.5	-3.0	-11.5	-1722.7
6	55	722.8	-847.8	32.1	-31.9	-21.3	-910.9
	56	-722.8	876.5	-32.1	31.9	-59.2	-1247.4
7	55	406.6	-741.3	98.7	-336.5	-42.4	-820.2
	56	-406.6	770.1	11.0	336.5	-67.4	-1071.6
8	55	442.8	-656.3	195.8	-572.3	-84.9	-728.1
	56	-442.8	685.1	-13.0	572.3	-176.4	-950.8
9	55	440.7	-860.5	95.1	-335.6	-40.3	-947.5
	56	-440.7	889.3	14.5	335.6	-60.6	-1242.7
10	55	-1287.7	-67.7	-60.2	10.8	29.6	-152.1
	56	1287.7	96.5	60.2	-10.8	121.2	-53.4
11	55	330.8	-894.6	-44.7	15.3	20.8	-986.1
	56	-330.8	923.4	44.7	-15.3	91.0	-1289.4
12	55	355.1	-862.4	3.2	-102.3	-0.2	-951.1
	56	-355.1	891.2	33.3	102.3	37.8	-1243.9
13	55	204.5	-583.3	-31.5	10.4	14.0	-654.1
	56	-204.5	612.1	31.5	-10.4	64.8	-842.2
14	55	8.9	-744.7	-48.0	14.3	22.7	-835.9
	56	-8.9	773.5	48.0	-14.3	97.4	-1064.4
15	55	408.7	-537.1	199.3	-573.1	-86.9	-600.8
	56	-408.7	565.9	-16.5	573.1	-183.2	-779.7
16	55	1343.9	-1213.9	10.6	1.9	-9.0	-1273.0
	56	-1343.9	1242.7	-10.6	-1.9	-17.7	-1801.9
17	55	764.0	-875.2	37.2	-37.1	-24.1	-938.1
	56	-764.0	903.9	-37.2	37.1	-69.0	-1288.8

Comb.	Nodo	N [kg]	T1-2 [kg]	T1-3 [kg]	Mt [kgm]	M1-3 [kgm]	M1-2 [kgm]
1	57	-33.8	-296.6	-11.9	238.4	84.1	-726.8
	58	33.8	296.6	11.9	-238.4	-24.9	-756.2
2	57	-236.6	-319.7	-8.9	341.8	104.2	-786.4
	58	236.6	319.7	8.9	-341.8	-59.8	-812.0
3	57	-76.6	-283.3	-11.0	242.4	80.3	-694.4
	58	76.6	283.3	11.0	-242.4	-25.3	-722.0
4	57	-207.3	187.5	-4.7	57.9	2.1	405.9
	58	207.3	-187.5	4.7	-57.9	21.6	531.6
5	57	404.2	-415.8	-8.6	106.0	43.5	-987.7
	58	-404.2	415.8	8.6	-106.0	10.5	-1091.9
6	57	151.2	-272.6	14.9	155.7	9.7	-660.5
	58	-151.2	272.6	-14.9	-155.7	-82.1	-703.2
7	57	-2.4	-215.0	-9.0	165.0	59.8	-526.6
	58	2.4	215.0	9.0	-165.0	-14.8	-548.5
8	57	-137.6	-230.4	-7.0	233.9	73.1	-566.4
	58	137.6	230.4	7.0	-233.9	-38.1	-585.7
9	57	-30.9	-206.2	-8.4	167.7	57.2	-505.0
	58	30.9	206.2	8.4	-167.7	-15.1	-525.7
10	57	-118.0	107.7	-4.2	44.7	5.1	228.5
	58	118.0	-107.7	4.2	-44.7	16.1	310.0
11	57	151.9	-164.8	-10.3	60.9	33.3	-401.0
	58	-151.9	164.8	10.3	-60.9	18.0	-423.0
12	57	86.6	-174.5	-9.4	95.8	40.4	-425.8
	58	-86.6	174.5	9.4	-95.8	6.6	-446.8
13	57	171.8	-155.4	-9.7	52.3	32.5	-378.3
	58	-171.8	155.4	9.7	-52.3	16.1	-398.9
14	57	90.5	-106.9	-8.9	57.9	26.8	-266.8
	58	-90.5	106.9	8.9	-57.9	17.4	-267.6
15	57	-109.1	-239.3	-7.6	231.3	75.7	-588.0
	58	109.1	239.3	7.6	-231.3	-37.9	-608.5
16	57	420.9	-436.8	-8.7	110.5	44.9	-1036.7
	58	-420.9	436.8	8.7	-110.5	10.3	-1147.7
17	57	146.9	-282.2	16.9	164.2	7.9	-683.7
	58	-146.9	282.2	-16.9	-164.2	-89.9	-728.2
1	59	131.5	-245.3	928.1	-493.5	-1444.3	-1348.3
	60	-131.5	245.3	-928.1	493.5	-879.0	734.2
2	59	750.3	-205.5	1713.4	-769.0	-2970.4	-1135.5
	60	-750.3	205.5	-1713.4	769.0	-1318.8	621.1
3	59	-7.0	-245.7	890.6	-503.0	-1379.4	-1363.4
	60	7.0	245.7	-890.6	503.0	-850.0	748.3
4	59	-493.7	2093.0	-362.2	-115.0	68.5	10261.5
	60	493.7	-2093.0	362.2	115.0	838.2	-5022.1
5	59	-1312.4	-1654.7	214.7	-42.1	542.5	-8433.9
	60	1312.4	1654.7	-214.7	42.1	-922.2	4291.8
6	59	-322.6	-355.1	475.6	-185.4	-591.2	-1850.0
	60	322.6	355.1	-475.6	185.4	-581.3	961.1

Comb.	Nodo	N [kg]	T1-2 [kg]	T1-3 [kg]	Mt [kgm]	M1-3 [kgm]	M1-2 [kgm]
7	59	51.7	-185.2	609.4	-331.3	-921.5	-1014.6
	60	-51.7	185.2	-609.4	331.3	-604.1	550.8
8	59	464.2	-158.7	1133.0	-514.9	-1938.9	-872.7
	60	-464.2	158.7	-1133.0	514.9	-897.3	475.5
9	59	-40.6	-185.5	584.4	-337.6	-878.3	-1024.7
	60	40.6	185.5	-584.4	337.6	-584.7	560.3
10	59	-365.1	1373.6	-250.8	-79.0	87.0	6725.3
	60	365.1	-1373.6	250.8	79.0	540.7	-3286.7
11	59	-606.7	-209.4	-180.0	-53.8	583.2	-1147.6
	60	606.7	209.4	180.0	53.8	-132.6	623.4
12	59	-406.3	-197.9	79.4	-146.6	81.7	-1086.7
	60	406.3	197.9	-79.4	146.6	-280.6	591.3
13	59	-391.0	-188.4	-113.1	-33.0	430.7	-1015.6
	60	391.0	188.4	113.1	33.0	-147.7	544.0
14	59	-572.1	108.6	-197.3	-59.4	486.9	432.9
	60	572.1	-108.6	197.3	59.4	7.0	-161.2
15	59	556.6	-158.4	1158.0	-508.6	-1982.2	-862.6
	60	-556.6	158.4	-1158.0	508.6	-916.6	466.0
16	59	-1417.4	-1772.1	239.9	-44.0	553.6	-9028.3
	60	1417.4	1772.1	-239.9	44.0	-983.9	4592.3
17	59	-327.8	-368.7	522.2	-200.7	-671.4	-1918.6
	60	327.8	368.7	-522.2	200.7	-616.4	995.6
1	60	2352.7	-245.3	-409.4	-493.5	879.0	-734.2
	61	-2352.7	245.3	409.4	493.5	144.5	120.9
2	60	3613.5	-205.5	-614.6	-769.0	1318.8	-621.1
	61	-3613.5	205.5	614.6	769.0	217.7	107.5
3	60	2174.8	-245.7	-392.2	-503.0	850.0	-748.3
	61	-2174.8	245.7	392.2	503.0	130.6	134.1
4	60	-1026.3	2093.0	324.0	-115.0	-838.2	5022.1
	61	1026.3	-2093.0	-324.0	115.0	28.3	210.3
5	60	86.4	-1654.7	-380.5	-42.1	922.2	-4291.8
	61	-86.4	1654.7	380.5	42.1	23.4	176.8
6	60	858.2	-355.1	-263.4	-185.4	581.3	-961.1
	61	-858.2	355.1	263.4	185.4	80.1	121.6
7	60	1622.6	-185.2	-281.6	-331.3	604.1	-550.8
	61	-1622.6	185.2	281.6	331.3	99.8	87.7
8	60	2463.2	-158.7	-418.3	-514.9	897.3	-475.5
	61	-2463.2	158.7	418.3	514.9	148.6	78.8
9	60	1504.0	-185.5	-270.1	-337.6	584.7	-560.3
	61	-1504.0	185.5	270.1	337.6	90.5	96.5
10	60	-630.1	1373.6	207.4	-79.0	-540.7	3286.7
	61	630.1	-1373.6	-207.4	79.0	22.4	147.3
11	60	224.1	-209.4	-59.0	-53.8	132.6	-623.4
	61	-224.1	209.4	59.0	53.8	14.8	99.9
12	60	646.5	-197.9	-128.0	-146.6	280.6	-591.3
	61	-646.5	197.9	128.0	146.6	39.5	96.6

Comb.	Nodo	N [kg]	T1-2 [kg]	T1-3 [kg]	Mt [kgm]	M1-3 [kgm]	M1-2 [kgm]
13	60	389.3	-188.4	-69.6	-33.0	147.7	-544.0
	61	-389.3	188.4	69.6	33.0	26.4	73.0
14	60	27.8	108.6	-2.9	-59.4	-7.0	161.2
	61	-27.8	-108.6	2.9	59.4	14.3	110.3
15	60	2581.8	-158.4	-429.8	-508.6	916.6	-466.0
	61	-2581.8	158.4	429.8	508.6	157.9	70.0
16	60	77.9	-1772.1	-405.2	-44.0	983.9	-4592.3
	61	-77.9	1772.1	405.2	44.0	22.4	187.1
17	60	899.8	-368.7	-279.2	-200.7	616.4	-995.6
	61	-899.8	368.7	279.2	200.7	84.6	126.7
1	61	2773.4	-245.3	52.3	-493.5	-144.5	-120.9
	62	-2773.4	245.3	-52.3	493.5	14.2	-490.7
2	61	4387.6	-205.5	104.8	-769.0	-217.7	-107.5
	62	-4387.6	205.5	-104.8	769.0	-43.6	-404.8
3	61	2711.6	-245.7	45.7	-503.0	-130.6	-134.1
	62	-2711.6	245.7	-45.7	503.0	16.6	-478.6
4	61	-3003.2	2093.0	417.2	-115.0	-28.3	-210.3
	62	3003.2	-2093.0	-417.2	115.0	-1012.0	5428.7
5	61	1396.6	-1654.7	-285.5	-42.1	-23.4	-176.8
	62	-1396.6	1654.7	285.5	42.1	792.0	-3971.1
6	61	1401.4	-355.1	-47.3	-185.4	-80.1	-121.6
	62	-1401.4	355.1	47.3	185.4	370.1	-811.9
7	61	1882.2	-185.2	33.1	-331.3	-99.8	-87.7
	62	-1882.2	185.2	-33.1	331.3	17.2	-374.1
8	61	2958.3	-158.7	68.1	-514.9	-148.6	-78.8
	62	-2958.3	158.7	-68.1	514.9	-21.3	-316.9
9	61	1841.0	-185.5	28.7	-337.6	-90.5	-96.5
	62	-1841.0	185.5	-28.7	337.6	18.9	-366.0
10	61	-1968.9	1373.6	276.4	-79.0	-22.4	-147.3
	62	1968.9	-1373.6	-276.4	79.0	-666.9	3572.1
11	61	211.5	-209.4	-23.2	-53.8	-14.8	-99.9
	62	-211.5	209.4	23.2	53.8	72.8	-422.2
12	61	751.2	-197.9	-5.8	-146.6	-39.5	-96.6
	62	-751.2	197.9	5.8	146.6	54.0	-396.9
13	61	257.6	-188.4	-15.5	-33.0	-26.4	-73.0
	62	-257.6	188.4	15.5	33.0	65.2	-396.8
14	61	-234.2	108.6	35.9	-59.4	-14.3	-110.3
	62	234.2	-108.6	-35.9	59.4	-75.1	381.0
15	61	2999.5	-158.4	72.5	-508.6	-157.9	-70.0
	62	-2999.5	158.4	-72.5	508.6	-22.9	-324.9
16	61	1494.5	-1772.1	-307.1	-44.0	-22.4	-187.1
	62	-1494.5	1772.1	307.1	44.0	850.4	-4256.8
17	61	1499.9	-368.7	-49.4	-200.7	-84.6	-126.7
	62	-1499.9	368.7	49.4	200.7	395.2	-845.3
1	62	2577.7	-245.3	143.6	-493.5	-14.2	490.7

Comb.	Nodo	N [kg]	T1-2 [kg]	T1-3 [kg]	Mt [kgm]	M1-3 [kgm]	M1-2 [kgm]
	63	-2577.7	245.3	-143.6	493.5	-345.2	-1104.8
2	62	4302.2	-205.5	199.8	-769.0	43.6	404.8
	63	-4302.2	205.5	-199.8	769.0	-543.7	-919.1
3	62	2586.2	-245.7	148.7	-503.0	-16.6	478.6
	63	-2586.2	245.7	-148.7	503.0	-355.7	-1093.6
4	62	-4792.3	2093.0	-259.7	-115.0	1012.0	-5428.7
	63	4792.3	-2093.0	259.7	115.0	-361.8	10668.1
5	62	1996.1	-1654.7	325.6	-42.1	-792.0	3971.1
	63	-1996.1	1654.7	-325.6	42.1	82.2	-8113.3
6	62	1593.2	-355.1	361.7	-185.4	-370.1	811.9
	63	-1593.2	355.1	-361.7	185.4	-585.6	-1700.8
7	62	1724.4	-185.2	99.6	-331.3	-17.2	374.1
	63	-1724.4	185.2	-99.6	331.3	-232.1	-837.8
8	62	2874.1	-158.7	137.1	-514.9	21.3	316.9
	63	-2874.1	158.7	-137.1	514.9	-364.5	-714.1
9	62	1730.2	-185.5	103.1	-337.6	-18.9	366.0
	63	-1730.2	185.5	-103.1	337.6	-239.1	-830.4
10	62	-3188.9	1373.6	-169.2	-79.0	666.9	-3572.1
	63	3188.9	-1373.6	169.2	79.0	-243.2	7010.7
11	62	18.7	-209.4	44.1	-53.8	-72.8	422.2
	63	-18.7	209.4	-44.1	53.8	-37.6	-946.4
12	62	592.1	-197.9	63.2	-146.6	-54.0	396.9
	63	-592.1	197.9	-63.2	146.6	-104.1	-892.2
13	62	26.4	-188.4	35.1	-33.0	-65.2	396.8
	63	-26.4	188.4	-35.1	33.0	-22.6	-868.4
14	62	-620.5	108.6	1.9	-59.4	75.1	-381.0
	63	620.5	-108.6	-1.9	59.4	-79.9	652.7
15	62	2868.4	-158.4	133.6	-508.6	22.9	324.9
	63	-2868.4	158.4	-133.6	508.6	-357.5	-721.5
16	62	2201.4	-1772.1	351.1	-44.0	-850.4	4256.8
	63	-2201.4	1772.1	-351.1	44.0	96.1	-8692.8
17	62	1743.6	-368.7	389.1	-200.7	-395.2	845.3
	63	-1743.6	368.7	-389.1	200.7	-630.0	-1768.2
1	65	-3018.7	4093.8	-81.5	2550.1	40.3	7126.9
	66	3018.7	-4088.9	94.5	-2550.1	180.1	3115.2
2	65	-4636.7	3580.1	55.6	4344.1	-266.3	5978.0
	66	4636.7	-3575.2	-33.9	-4344.1	154.2	2978.1
3	65	-2990.8	4823.4	-113.6	2505.0	120.1	8673.4
	66	2990.8	-4818.5	126.6	-2505.0	180.5	3395.0
4	65	340.2	8369.9	-472.6	-194.5	1585.0	20304.2
	66	-340.2	-8365.0	472.6	194.5	-402.0	642.2
5	65	-3495.7	-1160.1	55.9	317.0	-661.5	-6156.3
	66	3495.7	1163.9	-55.9	-317.0	464.1	3262.7
6	65	-2805.3	15.6	0.2	619.2	-303.7	-2574.0
	66	2805.3	-11.9	-0.2	-619.2	103.7	2616.7
7	65	-2036.0	2946.9	-73.9	1701.9	59.0	5109.1

Comb.	Nodo	N [kg]	T1-2 [kg]	T1-3 [kg]	Mt [kgm]	M1-3 [kgm]	M1-2 [kgm]
	66	2036.0	-2943.2	82.6	-1701.9	136.8	2263.3
8	65	-3114.7	2604.5	17.5	2897.9	-145.3	4343.1
	66	3114.7	-2600.7	-3.1	-2897.9	119.5	2172.0
9	65	-2017.4	3433.3	-95.3	1671.9	112.3	6140.1
	66	2017.4	-3429.5	103.9	-1671.9	137.1	2449.9
10	65	203.3	5797.6	-334.6	-127.8	1088.9	13894.0
	66	-203.3	-5793.9	334.6	127.8	-251.3	614.7
11	65	-332.6	3602.1	-221.3	-102.6	400.6	6635.0
	66	332.6	-3598.3	221.3	102.6	153.4	2377.4
12	65	-879.3	3469.2	-176.8	493.2	300.4	6324.7
	66	879.3	-3465.4	179.7	-493.2	145.9	2355.0
13	65	-276.1	2379.3	-172.8	-29.3	291.9	4142.5
	66	276.1	-2375.5	172.8	29.3	140.8	1808.9
14	65	-215.7	4107.8	-247.3	-111.9	547.3	8234.9
	66	215.7	-4104.0	247.3	111.9	71.7	2043.6
15	65	-3133.2	2118.1	38.9	2928.0	-198.6	3312.1
	66	3133.2	-2114.3	-24.5	-2928.0	119.2	1985.4
16	65	-3753.5	-1420.7	76.0	344.6	-739.9	-6936.6
	66	3753.5	1424.4	-76.0	-344.6	490.6	3395.5
17	65	-3022.6	-152.1	21.7	673.8	-362.3	-3069.7
	66	3022.6	155.8	-21.7	-673.8	99.9	2694.5
1	66	-6071.6	1882.4	-257.8	1027.9	-177.6	-2169.6
	67	6071.6	-1877.6	270.8	-1027.9	838.4	6869.6
2	66	-8071.0	1514.7	-198.6	1756.2	-150.0	-2182.7
	67	8071.0	-1509.8	220.3	-1756.2	673.6	5963.3
3	66	-6427.5	2505.6	-342.7	1003.5	-178.0	-2207.2
	67	6427.5	-2500.7	355.7	-1003.5	1051.0	8465.1
4	66	-3141.3	3968.6	-494.5	-129.4	402.2	2362.1
	67	3141.3	-3963.7	494.5	129.4	834.0	7553.3
5	66	-3156.1	-874.8	29.3	260.5	-464.0	-4309.9
	67	3156.1	878.5	-29.3	-260.5	384.7	2116.9
6	66	-2971.5	-277.0	-109.4	470.5	-103.3	-3114.3
	67	2971.5	280.8	109.4	-470.5	355.2	2413.7
7	66	-4168.8	1296.0	-178.5	688.0	-135.1	-1595.0
	67	4168.8	-1292.3	187.2	-688.0	592.3	4830.3
8	66	-5501.7	1050.8	-139.1	1173.6	-116.8	-1603.7
	67	5501.7	-1047.1	153.5	-1173.6	482.4	4226.1
9	66	-4406.0	1711.4	-235.1	671.8	-135.4	-1620.1
	67	4406.0	-1707.7	243.8	-671.8	734.0	5893.9
10	66	-2215.3	2686.8	-336.3	-83.5	251.4	1426.2
	67	2215.3	-2683.0	336.3	83.5	589.4	5286.1
11	66	-2143.2	1837.3	-260.6	-45.0	-153.4	-1493.2
	67	2143.2	-1833.6	260.6	45.0	804.8	6081.9
12	66	-2839.0	1741.6	-244.6	196.5	-145.3	-1510.2
	67	2839.0	-1737.9	247.5	-196.5	760.4	5859.6
13	66	-1424.1	860.9	-126.5	-4.1	-140.7	-1306.5

Comb.	Nodo	N [kg]	T1-2 [kg]	T1-3 [kg]	Mt [kgm]	M1-3 [kgm]	M1-2 [kgm]
	67	1424.1	-857.2	126.5	4.1	457.0	3454.2
14	66	-2181.7	2068.8	-284.0	-55.0	-71.7	-904.3
	67	2181.7	-2065.1	284.0	55.0	781.7	6071.6
15	66	-5264.4	635.4	-82.5	1189.9	-116.5	-1578.6
	67	5264.4	-631.7	96.9	-1189.9	340.7	3162.4
16	66	-3307.3	-998.4	39.3	281.4	-490.5	-4560.5
	67	3307.3	1002.1	-39.3	-281.4	385.1	2058.3
17	66	-3124.1	-351.2	-111.4	508.5	-99.5	-3265.7
	67	3124.1	355.0	111.4	-508.5	352.3	2379.4
1	67	-5351.7	-2599.4	290.7	-554.3	-838.3	-7222.2
	68	5351.7	2604.3	-277.7	554.3	129.8	734.9
2	67	-7376.4	-2279.8	229.3	-970.1	-673.5	-6325.0
	68	7376.4	2284.6	-207.7	970.1	128.7	634.8
3	67	-5797.4	-3141.9	363.1	-549.0	-1051.0	-8814.5
	68	5797.4	3146.7	-350.1	549.0	161.9	974.7
4	67	-3704.4	-250.2	6.7	-21.5	-833.9	-5537.8
	68	3704.4	255.0	-6.7	21.5	817.2	4908.0
5	67	-1828.5	-2566.6	322.9	242.0	-384.8	-3908.9
	68	1828.5	2570.3	-322.9	-242.0	-408.2	-2496.2
6	67	-2062.6	-1989.2	241.3	390.7	-355.0	-3596.1
	68	2062.6	1993.0	-241.3	-390.7	-204.9	-1370.5
7	67	-3633.6	-1827.2	205.1	-363.4	-592.2	-5086.1
	68	3633.6	1830.9	-196.5	363.4	91.6	525.6
8	67	-4983.4	-1614.1	164.2	-640.5	-482.4	-4488.0
	68	4983.4	1617.8	-149.8	640.5	90.9	458.9
9	67	-3930.7	-2188.8	253.4	-359.8	-734.0	-6147.6
	68	3930.7	2192.6	-244.7	359.8	113.0	685.5
10	67	-2535.4	-261.0	15.8	-8.2	-589.3	-3963.2
	68	2535.4	264.8	-15.8	8.2	549.9	3307.7
11	67	-1695.6	-2231.2	280.4	55.3	-804.9	-6302.4
	68	1695.6	2234.9	-280.4	-55.3	105.6	734.7
12	67	-2393.9	-2155.4	263.8	-83.2	-760.4	-6085.8
	68	2393.9	2159.2	-260.9	83.2	106.2	707.0
13	67	-949.1	-1295.1	159.1	48.8	-457.0	-3647.1
	68	949.1	1298.9	-159.1	-48.8	60.4	413.2
14	67	-1904.3	-1884.8	234.1	43.2	-781.7	-5980.9
	68	1904.3	1888.6	-234.1	-43.2	198.0	1276.7
15	67	-4686.3	-1252.4	115.9	-644.1	-340.6	-3426.4
	68	4686.3	1256.2	-101.5	644.1	69.5	299.0
16	67	-1921.8	-2689.1	338.8	258.5	-385.2	-3981.1
	68	1921.8	2692.9	-338.8	-258.5	-445.9	-2729.7
17	67	-2185.0	-2064.0	250.8	419.9	-352.2	-3642.8
	68	2185.0	2067.8	-250.8	-419.9	-226.2	-1510.4
1	68	-2300.9	-5477.4	584.1	-1986.8	-131.7	-2297.2
	69	2300.9	5482.3	-571.1	1986.8	-1314.2	-11420.7

Comb.	Nodo	N [kg]	T1-2 [kg]	T1-3 [kg]	Mt [kgm]	M1-3 [kgm]	M1-2 [kgm]
2	68	-4214.0	-4999.0	617.3	-3405.0	-131.9	-2051.1
	69	4214.0	5003.9	-595.6	3405.0	-1386.4	-10469.2
3	68	-2389.6	-6452.6	673.7	-1962.4	-163.8	-2807.4
	69	2389.6	6457.5	-660.7	1962.4	-1506.5	-13351.7
4	68	-2830.5	-1056.9	527.2	39.1	-817.0	-4295.5
	69	2830.5	1061.8	-527.2	-39.1	-502.8	1643.6
5	68	852.2	-5194.7	185.7	59.9	408.0	382.3
	69	-852.2	5198.5	-185.7	-59.9	-865.9	-13375.3
6	68	-557.2	-4192.3	267.4	-194.0	204.7	-210.5
	69	557.2	4196.0	-267.4	194.0	-815.9	-10281.5
7	68	-1479.4	-3901.5	410.6	-1316.1	-92.9	-1636.1
	69	1479.4	3905.2	-401.9	1316.1	-924.2	-8135.3
8	68	-2754.9	-3582.5	432.8	-2261.6	-93.0	-1472.0
	69	2754.9	3586.3	-418.3	2261.6	-972.3	-7501.0
9	68	-1538.6	-4551.6	470.4	-1299.9	-114.3	-1976.2
	69	1538.6	4555.4	-461.7	1299.9	-1052.4	-9422.7
10	68	-1832.5	-954.5	372.7	34.5	-549.8	-2968.3
	69	1832.5	958.2	-372.7	-34.5	-383.3	574.2
11	68	352.8	-4552.8	396.5	112.5	-105.6	-2027.6
	69	-352.8	4556.6	-396.5	-112.5	-886.9	-9374.4
12	68	-282.5	-4446.4	412.1	-359.6	-106.6	-1967.2
	69	282.5	4450.1	-409.2	359.6	-921.3	-9168.3
13	68	419.5	-2897.6	248.3	78.9	-60.4	-1232.3
	69	-419.5	2901.3	-248.3	-78.9	-561.3	-6025.9
14	68	-98.0	-3920.8	400.0	99.6	-198.0	-2266.4
	69	98.0	3924.5	-400.0	-99.6	-803.5	-7553.2
15	68	-2695.7	-2932.4	373.0	-2277.9	-71.6	-1131.9
	69	2695.7	2936.2	-358.5	2277.9	-844.0	-6213.6
16	68	917.1	-5409.7	183.3	56.6	445.7	502.3
	69	-917.1	5413.4	-183.3	-56.6	-897.4	-14028.2
17	68	-642.6	-4327.8	273.6	-225.1	225.9	-141.1
	69	642.6	4331.5	-273.6	225.1	-845.0	-10687.7
1	69	-153.7	1811.7	589.5	558.8	-582.8	3577.2
	70	153.7	-1806.8	-576.5	-558.8	-874.7	946.0
2	69	-1143.4	1833.7	1100.0	970.6	-1324.8	3665.1
	70	1143.4	-1828.8	-1078.4	-970.6	-1398.2	913.0
3	69	-93.4	1835.5	577.4	541.6	-536.5	3660.9
	70	93.4	-1830.6	-564.5	-541.6	-890.9	921.7
4	69	1730.3	8721.3	-603.3	-228.7	1436.8	19039.4
	70	-1730.3	-8716.4	603.3	228.7	71.5	2757.7
5	69	-427.8	-2343.7	225.1	240.5	-403.7	-5794.3
	70	427.8	2347.4	-225.1	-240.5	-196.0	-70.1
6	69	-158.1	1690.1	101.8	382.6	-87.4	3294.1
	70	158.1	-1686.3	-101.8	-382.6	-264.9	926.9
7	69	-27.3	1381.0	378.9	370.2	-351.3	2702.5
	70	27.3	-1377.2	-370.2	-370.2	-585.1	745.3

Comb.	Nodo	N [kg]	T1-2 [kg]	T1-3 [kg]	Mt [kgm]	M1-3 [kgm]	M1-2 [kgm]
8	69	-687.1	1395.6	719.2	644.8	-845.9	2761.1
	70	687.1	-1391.9	-704.8	-644.8	-934.1	723.3
9	69	12.9	1396.8	370.8	358.8	-320.4	2758.3
	70	-12.9	-1393.1	-362.2	-358.8	-595.9	729.1
10	69	1228.7	5987.4	-416.4	-154.8	995.2	13010.7
	70	-1228.7	-5983.6	416.4	154.8	45.8	1953.0
11	69	910.5	1363.5	-135.2	-49.8	401.0	2625.2
	70	-910.5	-1359.7	135.2	49.8	-63.1	778.8
12	69	590.9	1372.1	34.5	87.1	156.0	2659.5
	70	-590.9	-1368.3	-31.6	-87.1	-238.6	766.0
13	69	727.5	1323.4	-116.5	-27.2	325.1	2477.5
	70	-727.5	-1319.6	116.5	27.2	-33.8	826.3
14	69	974.0	2290.4	-192.6	-72.8	524.2	4709.4
	70	-974.0	-2286.7	192.6	72.8	-42.6	1011.9
15	69	-727.3	1379.8	727.3	656.2	-876.8	2705.2
	70	727.3	-1376.0	-712.8	-656.2	-923.3	739.5
16	69	-555.3	-2637.2	252.3	261.9	-461.5	-6454.9
	70	555.3	2641.0	-252.3	-261.9	-209.6	-143.7
17	69	-250.1	1721.1	119.7	415.9	-122.7	3364.4
	70	250.1	-1717.4	-119.7	-415.9	-284.0	934.3
1	70	-636.2	-286.2	-161.2	-890.7	874.7	-683.3
	71	636.2	291.0	174.2	890.7	-455.4	-38.2
2	70	-1700.4	-202.2	-155.1	-1445.3	1398.2	-600.1
	71	1700.4	207.1	176.8	1445.3	-983.4	88.4
3	70	-556.7	-365.6	-172.7	-899.9	890.8	-678.4
	71	556.7	370.4	185.7	899.9	-442.9	-241.7
4	70	-2778.4	6980.0	-597.8	-219.6	-71.5	23.4
	71	2778.4	-6975.1	597.8	219.6	1566.0	17420.4
5	70	1846.7	-3993.2	212.8	163.7	196.1	-1095.3
	71	-1846.7	3997.0	-212.8	-163.7	-702.5	-8892.2
6	70	-56.7	167.0	69.9	239.6	265.2	-594.9
	71	56.7	-163.2	-69.9	-239.6	-378.0	1008.9
7	70	-394.2	-202.4	-121.1	-596.4	585.1	-543.7
	71	394.2	206.1	129.8	596.4	-271.5	33.1
8	70	-1103.6	-146.4	-117.0	-966.1	934.1	-488.3
	71	1103.6	150.2	131.5	966.1	-623.5	117.5
9	70	-341.1	-255.3	-128.7	-602.5	595.8	-540.4
	71	341.1	259.0	137.4	602.5	-263.2	-102.5
10	70	-1822.3	4641.7	-412.2	-149.0	-45.7	-72.6
	71	1822.3	-4638.0	412.2	149.0	1076.1	11672.2
11	70	622.3	-301.6	-130.3	-43.8	63.0	-631.6
	71	-622.3	305.3	130.3	43.8	262.9	-127.0
12	70	278.7	-277.8	-128.8	-229.1	238.5	-603.0
	71	-278.7	281.5	131.7	229.1	87.1	-96.1
13	70	407.5	-168.3	-112.3	-28.5	33.8	-647.2
	71	-407.5	172.1	112.3	28.5	247.1	221.7

Comb.	Nodo	N [kg]	T1-2 [kg]	T1-3 [kg]	Mt [kgm]	M1-3 [kgm]	M1-2 [kgm]
14	70	135.0	679.9	-187.8	-65.7	42.6	-519.9
	71	-135.0	-676.1	187.8	65.7	427.0	2214.8
15	70	-1156.7	-93.5	-109.4	-959.9	923.3	-491.5
	71	1156.7	97.2	123.8	959.9	-631.8	253.2
16	70	1972.6	-4302.1	238.8	179.5	209.7	-1130.8
	71	-1972.6	4305.8	-238.8	-179.5	-778.7	-9628.7
17	70	-95.2	192.4	85.5	262.9	284.3	-590.2
	71	95.2	-188.7	-85.5	-262.9	-429.6	1068.1
1	72	297.8	125.4	-28.2	17.4	3.0	122.7
	82	-297.8	31.7	-50.5	-17.4	-33.6	6.2
2	72	480.8	208.7	-31.1	28.9	7.0	203.7
	82	-480.8	53.3	-47.5	-28.9	-29.5	10.0
3	72	284.3	125.4	-32.9	17.3	9.5	122.6
	82	-284.3	31.8	-45.7	-17.3	-27.0	6.2
4	72	-1343.9	-8.1	-123.0	0.7	130.7	-20.5
	82	1343.9	8.1	44.3	-0.7	99.3	-1.6
5	72	316.3	1.4	37.9	0.5	-78.2	2.8
	82	-316.3	-1.4	-98.4	-0.5	-109.3	1.4
6	72	186.2	2.8	-17.9	1.0	-2.7	5.2
	82	-186.2	-2.8	-42.6	-1.0	-31.3	2.6
7	72	204.1	83.7	-21.6	11.6	2.2	81.8
	82	-204.1	21.1	-38.9	-11.6	-26.0	4.2
8	72	326.0	139.1	-23.6	19.3	4.9	135.8
	82	-326.0	35.5	-36.9	-19.3	-23.3	6.7
9	72	195.0	83.6	-24.8	11.6	6.5	81.8
	82	-195.0	21.1	-35.7	-11.6	-21.6	4.1
10	72	-890.4	-5.3	-84.8	0.5	87.3	-13.6
	82	890.4	5.3	24.3	-0.5	62.6	-1.0
11	72	15.0	0.3	-23.2	0.0	4.5	0.7
	82	-15.0	-0.3	-37.3	-0.0	-23.8	0.3
12	72	75.6	28.1	-24.1	3.9	5.6	27.7
	82	-75.6	6.8	-36.4	-3.9	-22.6	1.5
13	72	33.1	0.3	-20.0	0.1	0.1	0.6
	82	-33.1	-0.3	-40.5	-0.1	-28.3	0.2
14	72	-167.7	-0.8	-36.3	0.1	22.1	-2.2
	82	167.7	0.8	-24.2	-0.1	-5.4	0.0
15	72	335.0	139.2	-20.4	19.4	0.6	135.9
	82	-335.0	35.5	-40.1	-19.4	-27.7	6.7
16	72	340.6	1.6	42.5	0.6	-84.4	3.0
	82	-340.6	-1.6	-103.0	-0.6	-115.7	1.5
17	72	201.1	3.1	-17.8	1.0	-2.8	5.7
	82	-201.1	-3.1	-42.7	-1.0	-31.4	2.9
1	82	208.4	64.8	-25.5	7.2	18.5	-5.6
	83	-208.4	92.4	-10.3	-7.2	2.3	-32.3
2	82	408.5	108.3	-24.2	11.8	16.8	-9.0

Comb.	Nodo	N [kg]	T1-2 [kg]	T1-3 [kg]	Mt [kgm]	M1-3 [kgm]	M1-2 [kgm]
	83	-408.5	153.6	-11.6	-11.8	0.5	-53.3
3	82	216.9	64.8	-29.8	7.1	24.6	-5.6
	83	-216.9	92.4	-5.9	-7.1	8.2	-32.5
4	82	-974.5	0.2	-143.0	-0.6	180.2	1.6
	83	974.5	-0.2	107.2	0.6	163.8	-1.1
5	82	-116.5	-0.6	67.3	0.7	-105.4	-1.3
	83	116.5	0.6	-94.8	-0.7	-117.5	-0.3
6	82	-6.2	-1.1	29.3	1.2	-53.0	-2.5
	83	6.2	1.1	-56.8	-1.2	-65.2	-0.6
7	82	132.4	43.2	-18.6	4.8	12.9	-3.8
	83	-132.4	61.6	-8.9	-4.8	0.4	-21.6
8	82	265.8	72.2	-17.7	7.9	11.7	-6.0
	83	-265.8	102.4	-9.8	-7.9	-0.8	-35.5
9	82	138.1	43.2	-21.5	4.8	16.9	-3.7
	83	-138.1	61.6	-6.0	-4.8	4.3	-21.7
10	82	-656.2	0.1	-96.9	-0.4	120.6	1.1
	83	656.2	-0.1	69.4	0.4	108.1	-0.7
11	82	-55.7	-0.3	-21.5	0.2	16.9	-0.2
	83	55.7	0.3	-6.0	-0.2	4.4	-0.6
12	82	10.3	14.2	-21.2	1.7	16.5	-1.4
	83	-10.3	20.7	-6.3	-1.7	4.0	-7.6
13	82	-56.7	-0.2	-15.2	0.2	8.2	-0.2
	83	56.7	0.2	-12.3	-0.2	-4.2	-0.4
14	82	-174.1	-0.2	-37.1	0.0	38.3	0.0
	83	174.1	0.2	9.6	-0.0	25.8	-0.7
15	82	260.1	72.2	-14.8	7.9	7.6	-6.1
	83	-260.1	102.4	-12.7	-7.9	-4.7	-35.4
16	82	-127.0	-0.6	73.8	0.8	-114.4	-1.4
	83	127.0	0.6	-101.3	-0.8	-126.5	-0.3
17	82	-1.0	-1.1	32.8	1.2	-57.9	-2.8
	83	1.0	1.1	-60.3	-1.2	-70.1	-0.6
1	83	142.7	94.3	-33.9	-4.9	29.3	32.2
	84	-142.7	63.0	-1.9	4.9	14.7	10.8
2	83	349.5	156.8	-30.9	-8.6	25.3	53.1
	84	-349.5	105.4	-4.9	8.6	10.6	17.7
3	83	150.8	94.3	-29.2	-4.8	22.9	32.4
	84	-150.8	63.1	-6.6	4.8	8.2	10.6
4	83	-771.6	0.2	-152.6	0.2	192.6	1.1
	84	771.6	-0.2	116.8	-0.2	178.2	-0.4
5	83	-275.4	0.9	50.0	0.3	-82.3	0.4
	84	275.4	-0.9	-77.6	-0.3	-93.4	2.2
6	83	-75.9	1.6	12.1	-0.3	-30.1	0.7
	84	75.9	-1.6	-39.6	0.3	-41.2	3.9
7	83	80.3	62.9	-26.5	-3.2	23.2	21.5
	84	-80.3	42.0	-1.0	3.2	12.0	7.3
8	83	218.2	104.6	-24.5	-5.7	20.5	35.4

Comb.	Nodo	N [kg]	T1-2 [kg]	T1-3 [kg]	Mt [kgm]	M1-3 [kgm]	M1-2 [kgm]
	84	-218.2	70.2	-3.0	5.7	9.2	11.9
9	83	85.8	62.9	-23.4	-3.2	18.9	21.6
	84	-85.8	42.0	-4.1	3.2	7.6	7.1
10	83	-529.2	0.2	-105.7	0.1	132.0	0.8
	84	529.2	-0.2	78.1	-0.1	121.0	-0.2
11	83	-115.7	0.3	-25.6	0.5	21.9	0.6
	84	115.7	-0.3	-2.0	-0.5	10.6	0.2
12	83	-47.4	21.2	-24.7	-0.8	20.6	7.6
	84	47.4	13.8	-2.9	0.8	9.4	2.5
13	83	-117.5	0.3	-29.5	0.3	27.3	0.4
	84	117.5	-0.3	2.0	-0.3	16.1	0.4
14	83	-196.8	0.3	-40.9	0.4	43.0	0.7
	84	196.8	-0.3	13.4	-0.4	31.7	0.1
15	83	212.8	104.6	-27.7	-5.8	24.8	35.4
	84	-212.8	70.2	0.1	5.8	13.5	12.0
16	83	-291.2	1.0	56.5	0.3	-91.2	0.3
	84	291.2	-1.0	-84.1	-0.3	-102.4	2.3
17	83	-70.7	1.7	15.6	-0.4	-34.9	0.7
	84	70.7	-1.7	-43.1	0.4	-46.0	4.2
1	84	415.1	27.8	-108.3	-16.2	114.0	-11.9
	73	-415.1	129.2	29.7	16.2	75.6	-127.4
2	84	603.3	45.6	-100.1	-27.8	102.6	-19.4
	73	-603.3	216.0	21.6	27.8	64.5	-214.6
3	84	407.7	28.1	-104.7	-16.2	109.0	-11.7
	73	-407.7	128.9	26.2	16.2	70.8	-126.7
4	84	-72.1	1.5	-206.9	1.1	251.9	0.3
	73	72.1	-1.5	128.3	-1.1	208.4	3.9
5	84	-333.2	-1.5	-12.0	0.3	-12.2	-2.4
	73	333.2	1.5	-48.5	-0.3	-37.9	-1.6
6	84	84.8	-3.1	-44.1	-0.1	32.8	-4.2
	73	-84.8	3.1	-16.3	0.1	5.3	-4.2
7	84	284.5	18.5	-82.0	-10.7	85.9	-8.0
	73	-284.5	86.1	21.6	10.7	56.4	-84.8
8	84	409.9	30.5	-76.6	-18.5	78.3	-13.0
	73	-409.9	144.0	16.1	18.5	49.0	-142.9
9	84	279.6	18.8	-79.7	-10.7	82.6	-7.9
	73	-279.6	85.9	19.2	10.7	53.2	-84.3
10	84	-40.3	1.0	-147.7	0.8	177.8	0.1
	73	40.3	-1.0	87.3	-0.8	144.9	2.7
11	84	80.3	0.8	-83.0	0.9	87.2	-0.4
	73	-80.3	-0.8	22.5	-0.9	57.7	2.6
12	84	144.3	6.8	-80.8	-3.0	84.2	-2.8
	73	-144.3	28.1	20.4	3.0	54.8	-26.4
13	84	74.0	0.4	-80.5	0.8	83.7	-0.5
	73	-74.0	-0.4	20.1	-0.8	54.4	1.5
14	84	54.2	0.9	-95.0	0.8	104.1	-0.2

Comb.	Nodo	N [kg]	T1-2 [kg]	T1-3 [kg]	Mt [kgm]	M1-3 [kgm]	M1-2 [kgm]
	73	-54.2	-0.9	34.6	-0.8	73.9	2.7
15	84	414.9	30.2	-79.0	-18.4	81.6	-13.1
	73	-414.9	144.2	18.5	18.4	52.3	-143.4
16	84	-367.7	-1.6	-6.5	0.3	-19.9	-2.6
	73	367.7	1.6	-54.0	-0.3	-45.3	-1.9
17	84	87.7	-3.3	-41.1	-0.2	28.7	-4.5
	73	-87.7	3.3	-19.3	0.2	1.4	-4.7
1	75	-409.5	47.2	53.6	5.6	-27.8	28.7
	76	409.5	29.2	46.2	-5.6	18.6	-6.2
2	75	-421.7	46.1	88.2	9.6	-44.2	26.9
	76	421.7	30.3	78.0	-9.6	31.5	-7.1
3	75	-494.8	49.1	53.9	5.5	-28.4	31.4
	76	494.8	27.4	45.9	-5.5	18.4	-4.4
4	75	-1428.7	59.9	2.7	-0.4	-5.2	51.4
	76	1428.7	16.5	-2.7	0.4	-1.5	3.0
5	75	433.3	24.4	-0.0	0.6	-0.0	1.7
	76	-433.3	34.5	0.0	-0.6	0.1	-14.3
6	75	-179.9	27.8	1.1	1.2	-2.2	7.8
	76	179.9	31.0	-1.1	-1.2	-0.5	-11.9
7	75	-284.9	35.8	35.8	3.8	-18.6	21.4
	76	284.9	23.0	30.7	-3.8	12.3	-5.3
8	75	-293.0	35.1	58.9	6.4	-29.6	20.2
	76	293.0	23.7	52.0	-6.4	20.9	-5.9
9	75	-341.7	37.1	35.9	3.7	-19.0	23.2
	76	341.7	21.8	30.6	-3.7	12.3	-4.1
10	75	-964.3	44.3	1.8	-0.3	-3.5	36.5
	76	964.3	14.5	-1.8	0.3	-1.0	0.8
11	75	-296.9	37.3	1.1	-0.2	-2.2	23.8
	76	296.9	21.5	-1.1	0.2	-0.6	-3.9
12	75	-304.6	37.1	12.7	1.1	-7.8	23.3
	76	304.6	21.8	9.5	-1.1	3.7	-4.2
13	75	-163.9	34.4	0.6	-0.1	-1.2	19.3
	76	163.9	24.4	-0.6	0.1	-0.4	-6.9
14	75	-438.9	38.9	1.3	-0.3	-2.5	26.6
	76	438.9	19.9	-1.3	0.3	-0.7	-2.8
15	75	-236.2	33.9	58.7	6.5	-29.2	18.3
	76	236.2	24.9	52.2	-6.5	21.0	-7.1
16	75	479.1	23.6	-0.0	0.7	0.0	0.4
	76	-479.1	35.2	0.0	-0.7	0.1	-14.9
17	75	-183.8	27.3	1.2	1.4	-2.4	7.0
	76	183.8	31.5	-1.2	-1.4	-0.6	-12.2
1	76	370.1	23.1	49.1	2.2	-18.5	9.5
	77	-370.1	14.3	50.5	-2.2	20.3	1.5
2	76	213.9	22.1	82.0	3.7	-31.2	8.6
	77	-213.9	15.3	84.1	-3.7	33.9	-0.1

Comb.	Nodo	N [kg]	T1-2 [kg]	T1-3 [kg]	Mt [kgm]	M1-3 [kgm]	M1-2 [kgm]
3	76	470.5	24.7	49.0	2.1	-18.4	10.9
	77	-470.5	12.6	50.6	-2.1	20.3	4.3
4	76	181.7	39.9	-0.4	-0.3	1.2	32.3
	77	-181.7	-2.5	0.4	0.3	-0.2	20.7
5	76	333.6	4.2	-0.0	0.5	0.0	-9.6
	77	-333.6	24.6	0.0	-0.5	0.1	-15.9
6	76	216.3	8.7	-0.2	1.0	0.5	-3.6
	77	-216.3	20.1	0.2	-1.0	-0.1	-10.7
7	76	269.8	17.4	32.7	1.4	-12.3	7.1
	77	-269.8	11.3	33.7	-1.4	13.5	0.5
8	76	165.7	16.8	54.6	2.5	-20.8	6.5
	77	-165.7	12.0	56.1	-2.5	22.6	-0.5
9	76	336.7	18.5	32.7	1.4	-12.2	8.0
	77	-336.7	10.2	33.7	-1.4	13.6	2.3
10	76	144.2	28.6	-0.3	-0.2	0.8	22.3
	77	-144.2	0.1	0.3	0.2	-0.1	13.3
11	76	445.0	19.0	-0.2	-0.1	0.4	8.6
	77	-445.0	9.8	0.2	0.1	0.0	2.9
12	76	398.3	18.7	10.8	0.4	-3.8	8.3
	77	-398.3	10.1	11.4	-0.4	4.5	2.5
13	76	276.3	16.5	-0.1	-0.0	0.3	6.6
	77	-276.3	12.3	0.1	0.0	-0.0	-1.4
14	76	394.0	21.1	-0.2	-0.1	0.5	11.5
	77	-394.0	7.7	0.2	0.1	-0.0	5.2
15	76	98.7	15.7	54.7	2.5	-20.9	5.6
	77	-98.7	13.1	56.0	-2.5	22.6	-2.4
16	76	341.4	3.2	-0.0	0.6	-0.0	-10.9
	77	-341.4	25.5	0.0	-0.6	0.1	-17.0
17	76	214.1	8.1	-0.2	1.1	0.5	-4.4
	77	-214.1	20.7	0.2	-1.1	-0.1	-11.4
1	77	307.5	9.0	50.1	-1.2	-20.2	-7.5
	78	-307.5	28.3	49.2	1.2	19.1	-16.5
2	77	141.2	9.9	83.5	-2.1	-33.8	-6.0
	78	-141.2	27.4	82.1	2.1	32.1	-15.8
3	77	416.4	7.4	50.2	-1.2	-20.3	-10.2
	78	-416.4	29.8	49.2	1.2	19.1	-17.7
4	77	595.2	26.7	-0.4	-0.0	0.0	13.3
	78	-595.2	10.6	0.4	0.0	1.0	6.7
5	77	3.4	-1.5	0.3	0.5	0.1	-14.4
	78	-3.4	30.2	-0.3	-0.5	-0.9	-25.3
6	77	72.6	2.9	0.2	0.8	0.2	-9.2
	78	-72.6	25.8	-0.2	-0.8	-0.5	-19.4
7	77	223.4	7.5	33.4	-0.8	-13.5	-4.8
	78	-223.4	21.2	32.8	0.8	12.7	-12.2
8	77	112.5	8.1	55.7	-1.4	-22.5	-3.9
	78	-112.5	20.6	54.7	1.4	21.4	-11.7

Comb.	Nodo	N [kg]	T1-2 [kg]	T1-3 [kg]	Mt [kgm]	M1-3 [kgm]	M1-2 [kgm]
9	77	296.0	6.5	33.4	-0.8	-13.5	-6.7
	78	-296.0	22.2	32.8	0.8	12.7	-13.0
10	77	415.2	19.3	-0.3	-0.0	0.0	9.1
	78	-415.2	9.4	0.3	0.0	0.7	3.3
11	77	416.2	6.5	0.1	0.1	0.0	-6.7
	78	-416.2	22.2	-0.1	-0.1	-0.2	-12.8
12	77	365.9	6.7	11.2	-0.2	-4.5	-6.4
	78	-365.9	22.0	10.9	0.2	4.1	-12.7
13	77	240.6	9.4	0.0	0.1	0.0	-1.9
	78	-240.6	19.3	-0.0	-0.1	-0.2	-10.5
14	77	426.4	8.9	0.0	0.1	0.0	-3.8
	78	-426.4	19.7	-0.0	-0.1	-0.1	-9.7
15	77	39.9	9.2	55.6	-1.4	-22.5	-2.0
	78	-39.9	19.5	54.8	1.4	21.4	-10.9
16	77	-13.2	-2.5	0.4	0.6	0.1	-15.5
	78	13.2	31.2	-0.4	-0.6	-1.0	-26.5
17	77	61.6	2.3	0.2	0.9	0.2	-9.9
	78	-61.6	26.4	-0.2	-0.9	-0.5	-20.2
1	78	-746.0	25.5	48.1	-4.5	-19.3	3.6
	79	746.0	51.0	51.7	4.5	23.8	-35.5
2	78	-787.8	26.7	80.8	-7.8	-32.5	4.8
	79	787.8	49.8	85.4	7.8	38.2	-33.7
3	78	-846.2	23.2	48.0	-4.5	-19.2	1.3
	79	846.2	53.2	51.8	4.5	24.0	-38.9
4	78	367.4	39.2	1.9	0.1	-1.1	14.3
	79	-367.4	37.3	-1.9	-0.1	-3.7	-11.9
5	78	-977.4	14.9	-1.9	0.1	1.2	-0.1
	79	977.4	43.9	1.9	-0.1	3.7	-36.2
6	78	-697.4	18.2	-0.5	-0.4	0.6	2.4
	79	697.4	40.6	0.5	0.4	0.9	-30.5
7	78	-524.3	20.4	32.0	-3.0	-12.8	3.5
	79	524.3	38.5	34.5	3.0	15.9	-26.2
8	78	-552.2	21.1	53.8	-5.2	-21.6	4.3
	79	552.2	37.7	57.0	5.2	25.6	-25.0
9	78	-591.1	18.8	31.9	-3.0	-12.8	2.0
	79	591.1	40.0	34.6	3.0	16.1	-28.4
10	78	217.9	29.5	1.2	0.1	-0.7	10.6
	79	-217.9	29.3	-1.2	-0.1	-2.4	-10.4
11	78	-494.4	18.8	-0.7	0.3	0.4	1.9
	79	494.4	40.0	0.7	-0.3	1.5	-28.4
12	78	-514.4	19.1	10.2	-0.8	-4.0	2.2
	79	514.4	39.8	12.0	0.8	6.3	-28.0
13	78	-316.8	22.7	-0.5	0.2	0.2	5.8
	79	316.8	36.1	0.5	-0.2	1.0	-22.6
14	78	-360.4	20.7	-0.4	0.2	0.2	3.4
	79	360.4	38.1	0.4	-0.2	0.7	-25.1

Comb.	Nodo	N [kg]	T1-2 [kg]	T1-3 [kg]	Mt [kgm]	M1-3 [kgm]	M1-2 [kgm]
15	78	-485.4	22.7	53.9	-5.2	-21.7	5.8
	79	485.4	36.2	56.9	5.2	25.4	-22.7
16	78	-1034.7	14.2	-2.0	0.1	1.2	-0.6
	79	1034.7	44.6	2.0	-0.1	3.9	-37.4
17	78	-732.0	17.7	-0.5	-0.5	0.7	2.1
	79	732.0	41.1	0.5	0.5	0.9	-31.3
1	79	-205.2	41.5	55.2	1.6	-27.7	21.2
	80	205.2	34.9	44.4	-1.6	14.3	-12.9
2	79	-265.0	41.9	91.8	2.7	-46.4	21.8
	80	265.0	34.5	74.2	-2.7	24.4	-12.5
3	79	-211.1	41.4	55.1	1.5	-27.5	21.2
	80	211.1	34.9	44.5	-1.5	14.2	-13.1
4	79	-1049.2	59.3	2.2	-0.5	-4.9	48.8
	80	1049.2	17.1	-2.2	0.5	-0.7	3.9
5	79	389.6	22.1	-0.3	0.5	1.9	1.0
	80	-389.6	36.6	0.3	-0.5	-1.3	-19.1
6	79	-139.1	32.8	1.4	0.8	-1.6	17.5
	80	139.1	26.0	-1.4	-0.8	-1.9	-9.0
7	79	-147.5	31.9	36.8	1.0	-18.5	16.3
	80	147.5	26.8	29.6	-1.0	9.4	-9.9
8	79	-187.4	32.2	61.2	1.8	-30.9	16.7
	80	187.4	26.6	49.5	-1.8	16.2	-9.6
9	79	-151.5	31.9	36.8	1.0	-18.4	16.2
	80	151.5	26.9	29.6	-1.0	9.4	-10.0
10	79	-710.2	43.7	1.5	-0.3	-3.3	34.6
	80	710.2	15.0	-1.5	0.3	-0.5	1.3
11	79	-90.9	31.5	0.2	-0.1	0.3	15.7
	80	90.9	27.3	-0.2	0.1	-0.7	-10.4
12	79	-110.9	31.6	12.4	0.3	-6.0	15.9
	80	110.9	27.1	9.7	-0.3	2.6	-10.3
13	79	-83.5	31.7	0.3	-0.1	0.0	15.8
	80	83.5	27.1	-0.3	0.1	-0.6	-10.1
14	79	-215.5	33.9	0.5	-0.1	-0.4	19.5
	80	215.5	24.8	-0.5	0.1	-0.7	-8.1
15	79	-183.4	32.2	61.3	1.8	-31.1	16.7
	80	183.4	26.5	49.4	-1.8	16.3	-9.5
16	79	427.1	21.4	-0.3	0.5	2.0	-0.2
	80	-427.1	37.4	0.3	-0.5	-1.4	-19.8
17	79	-143.9	32.9	1.5	0.9	-1.8	17.6
	80	143.9	25.9	-1.5	-0.9	-2.0	-8.9
1	80	29.4	38.5	47.4	-2.3	-14.4	16.0
	81	-29.4	37.8	52.3	2.3	20.5	-15.2
2	80	3.8	38.8	79.7	-3.7	-24.6	16.2
	81	-3.8	37.6	86.3	3.7	32.9	-14.7
3	80	15.8	38.4	47.3	-2.3	-14.3	15.9

Comb.	Nodo	N [kg]	T1-2 [kg]	T1-3 [kg]	Mt [kgm]	M1-3 [kgm]	M1-2 [kgm]
	81	-15.8	38.0	52.4	2.3	20.7	-15.5
4	80	1097.7	56.7	1.1	-0.4	0.4	32.0
	81	-1097.7	19.7	-1.1	0.4	-3.2	14.3
5	80	-617.1	20.0	-1.6	0.4	1.4	3.8
	81	617.1	38.7	1.6	-0.4	2.6	-27.2
6	80	-345.5	30.7	-0.1	0.5	1.9	13.2
	81	345.5	28.1	0.1	-0.5	-1.6	-10.0
7	80	30.6	29.7	31.5	-1.5	-9.5	12.3
	81	-30.6	29.1	34.9	1.5	13.8	-11.6
8	80	13.5	29.9	53.1	-2.5	-16.3	12.5
	81	-13.5	28.9	57.6	2.5	22.0	-11.3
9	80	21.5	29.5	31.4	-1.5	-9.5	12.3
	81	-21.5	29.2	35.0	1.5	13.9	-11.8
10	80	742.8	41.8	0.7	-0.3	0.3	23.0
	81	-742.8	17.0	-0.7	0.3	-2.0	8.0
11	80	51.4	29.3	-0.9	-0.1	0.8	12.1
	81	-51.4	29.4	0.9	0.1	1.4	-12.2
12	80	42.4	29.4	9.9	-0.6	-2.6	12.2
	81	-42.4	29.3	12.2	0.6	5.6	-12.0
13	80	71.5	29.6	-0.7	-0.0	0.6	12.3
	81	-71.5	29.1	0.7	0.0	1.1	-11.6
14	80	188.3	31.8	-0.6	-0.1	0.7	14.3
	81	-188.3	26.9	0.6	0.1	0.8	-8.2
15	80	22.5	30.0	53.1	-2.5	-16.4	12.6
	81	-22.5	28.8	57.6	2.5	21.9	-11.1
16	80	-673.2	19.3	-1.6	0.4	1.5	3.1
	81	673.2	39.5	1.6	-0.4	2.7	-28.4
17	80	-379.7	30.7	-0.0	0.6	2.0	13.2
	81	379.7	28.0	0.0	-0.6	-1.8	-9.8
1	89	192.6	217.8	-46.5	14.0	11.6	184.1
	103	-192.6	96.5	-67.9	-14.0	-41.0	-17.3
2	89	381.9	362.7	-48.6	23.3	14.5	306.1
	103	-381.9	161.2	-65.8	-23.3	-38.1	-29.0
3	89	189.1	217.8	-51.1	13.9	18.0	184.0
	103	-189.1	96.6	-63.3	-13.9	-34.7	-17.3
4	89	-623.5	-7.4	-131.6	0.6	128.6	-19.8
	103	623.5	7.4	17.2	-0.6	76.1	-0.4
5	89	-179.6	1.6	18.2	0.5	-65.5	3.2
	103	179.6	-1.6	-106.2	-0.5	-105.5	1.5
6	89	-5.6	3.1	-33.4	0.8	5.6	5.9
	103	5.6	-3.1	-54.6	-0.8	-34.8	2.9
7	89	122.6	145.3	-35.7	9.4	8.9	122.8
	103	-122.6	64.3	-52.3	-9.4	-31.6	-11.5
8	89	248.8	241.8	-37.2	15.6	10.8	204.2
	103	-248.8	107.4	-50.8	-15.6	-29.6	-19.4
9	89	120.3	145.2	-38.8	9.3	13.2	122.7

Comb.	Nodo	N [kg]	T1-2 [kg]	T1-3 [kg]	Mt [kgm]	M1-3 [kgm]	M1-2 [kgm]
	103	-120.3	64.3	-49.2	-9.3	-27.3	-11.5
10	89	-421.4	-4.9	-92.5	0.4	86.9	-13.2
	103	421.4	4.9	4.5	-0.4	46.5	-0.3
11	89	-63.7	0.3	-38.0	-0.0	12.0	0.6
	103	63.7	-0.3	-50.0	0.0	-28.4	0.2
12	89	-1.2	48.6	-38.6	3.1	12.8	41.3
	103	1.2	21.3	-49.4	-3.1	-27.7	-3.7
13	89	-53.0	0.3	-34.8	0.1	7.5	0.6
	103	53.0	-0.3	-53.2	-0.1	-32.8	0.2
14	89	-135.2	-0.8	-49.7	0.1	28.0	-2.2
	103	135.2	0.8	-38.3	-0.1	-12.4	0.1
15	89	251.2	241.9	-34.1	15.6	6.5	204.3
	103	-251.2	107.4	-53.9	-15.6	-33.9	-19.3
16	89	-192.3	1.7	22.4	0.5	-71.3	3.4
	103	192.3	-1.7	-110.4	-0.5	-111.3	1.6
17	89	-0.8	3.5	-33.4	0.9	5.6	6.4
	103	0.8	-3.5	-54.6	-0.9	-34.8	3.2
1	103	219.4	139.6	-43.8	5.9	27.6	18.9
	104	-219.4	174.7	-27.7	-5.9	-5.5	-67.3
2	103	406.7	233.0	-41.7	9.6	24.7	31.8
	104	-406.7	290.9	-29.8	-9.6	-8.3	-111.4
3	103	203.2	139.5	-48.1	5.8	33.5	19.0
	104	-203.2	174.8	-23.4	-5.8	0.5	-67.5
4	103	-740.0	-0.5	-147.8	-0.6	170.1	0.4
	104	740.0	0.5	76.3	0.6	137.9	-1.8
5	103	-93.3	-0.2	44.0	0.7	-85.6	-1.4
	104	93.3	0.2	-99.0	-0.7	-111.1	-0.3
6	103	25.7	-1.0	10.5	1.2	-39.6	-2.8
	104	-25.7	1.0	-65.5	-1.2	-65.0	-0.7
7	103	143.8	93.0	-32.7	3.9	19.9	12.6
	104	-143.8	116.5	-22.3	-3.9	-5.5	-44.9
8	103	268.7	155.3	-31.4	6.5	18.1	21.2
	104	-268.7	193.9	-23.6	-6.5	-7.4	-74.3
9	103	133.0	93.0	-35.6	3.9	23.9	12.7
	104	-133.0	116.5	-19.4	-3.9	-1.5	-45.0
10	103	-495.8	-0.3	-102.1	-0.4	115.0	0.3
	104	495.8	0.3	47.1	0.4	90.1	-1.2
11	103	-50.5	-0.3	-36.4	0.1	24.9	-0.2
	104	50.5	0.3	-18.6	-0.1	-0.5	-0.8
12	103	11.5	30.8	-35.8	1.4	24.2	4.1
	104	-11.5	39.1	-19.2	-1.4	-1.2	-15.5
13	103	-28.5	-0.2	-30.0	0.2	16.2	-0.2
	104	28.5	0.2	-25.0	-0.2	-9.3	-0.4
14	103	-141.4	-0.3	-50.0	0.0	43.5	-0.1
	104	141.4	0.3	-5.0	-0.0	18.2	-0.9
15	103	279.5	155.3	-28.5	6.5	14.1	21.2

Comb.	Nodo	N [kg]	T1-2 [kg]	T1-3 [kg]	Mt [kgm]	M1-3 [kgm]	M1-2 [kgm]
	104	-279.5	193.9	-26.5	-6.5	-11.4	-74.2
16	103	-103.4	-0.3	50.0	0.8	-93.7	-1.6
	104	103.4	0.3	-105.0	-0.8	-119.3	-0.3
17	103	30.7	-1.1	13.8	1.2	-44.0	-3.1
	104	-30.7	1.1	-68.8	-1.2	-69.5	-0.7
1	104	244.3	177.0	-48.8	-3.3	34.6	67.2
	105	-244.3	137.7	-22.8	3.3	1.1	-13.1
2	104	434.1	294.8	-45.4	-5.9	29.9	111.4
	105	-434.1	229.7	-26.2	5.9	-3.5	-21.8
3	104	228.0	177.1	-44.1	-3.2	28.2	67.5
	105	-228.0	137.6	-27.5	3.2	-5.3	-13.2
4	104	-732.9	0.3	-155.1	0.2	180.9	1.8
	105	732.9	-0.3	83.5	-0.2	147.6	-1.0
5	104	-78.6	0.8	29.0	0.7	-65.2	0.3
	105	78.6	-0.8	-84.1	-0.7	-90.5	2.1
6	104	36.1	1.6	-4.4	1.1	-19.1	0.7
	105	-36.1	-1.6	-50.7	-1.1	-44.6	4.1
7	104	162.3	118.0	-38.2	-2.1	27.5	44.8
	105	-162.3	91.8	-16.9	2.1	1.7	-8.7
8	104	288.8	196.5	-35.9	-3.9	24.4	74.3
	105	-288.8	153.1	-19.2	3.9	-1.4	-14.5
9	104	151.4	118.1	-35.0	-2.1	23.2	45.0
	105	-151.4	91.8	-20.0	2.1	-2.5	-8.8
10	104	-489.2	0.2	-109.0	0.1	125.0	1.2
	105	489.2	-0.2	54.0	-0.1	99.4	-0.6
11	104	-35.3	0.2	-37.8	0.5	27.0	0.7
	105	35.3	-0.2	-17.2	-0.5	1.3	-0.1
12	104	27.6	39.5	-36.8	-0.4	25.6	15.5
	105	-27.6	30.4	-18.3	0.4	-0.2	-3.0
13	104	-13.9	0.1	-42.0	0.3	32.8	0.4
	105	13.9	-0.1	-13.1	-0.3	7.1	0.0
14	104	-128.0	0.2	-51.4	0.4	45.7	0.9
	105	128.0	-0.2	-3.7	-0.4	20.0	-0.2
15	104	299.7	196.5	-39.0	-3.9	28.7	74.1
	105	-299.7	153.2	-16.1	3.9	2.9	-14.5
16	104	-90.1	0.9	34.9	0.8	-73.3	0.3
	105	90.1	-0.9	-89.9	-0.8	-98.5	2.3
17	104	40.6	1.7	-1.2	1.2	-23.5	0.7
	105	-40.6	-1.7	-53.9	-1.2	-49.0	4.5
1	105	119.7	92.3	-122.1	-12.2	115.2	11.2
	90	-119.7	221.6	7.8	12.2	63.2	-188.7
2	105	325.9	152.6	-113.6	-20.9	103.6	18.5
	90	-325.9	370.7	-0.7	20.9	51.5	-318.0
3	105	111.5	92.6	-118.8	-12.2	110.7	11.2
	90	-111.5	221.3	4.5	12.2	58.6	-188.0

Comb.	Nodo	N [kg]	T1-2 [kg]	T1-3 [kg]	Mt [kgm]	M1-3 [kgm]	M1-2 [kgm]
4	105	-1008.2	2.4	-214.1	0.7	241.1	1.1
	90	1008.2	-2.4	99.8	-0.7	190.0	5.4
5	105	22.8	-1.1	-28.7	0.4	-0.9	-2.1
	90	-22.8	1.1	-59.2	-0.4	-41.0	-0.9
6	105	-6.3	-3.1	-57.8	-0.1	39.0	-4.3
	90	6.3	3.1	-30.1	0.1	-1.0	-4.3
7	105	67.6	61.7	-92.8	-8.1	87.1	7.4
	90	-67.6	147.6	4.9	8.1	47.1	-125.5
8	105	205.1	101.8	-87.1	-13.9	79.3	12.3
	90	-205.1	247.0	-0.8	13.9	39.2	-211.8
9	105	62.2	61.8	-90.6	-8.1	84.0	7.5
	90	-62.2	147.5	2.7	8.1	44.0	-125.1
10	105	-684.3	1.7	-154.1	0.5	171.0	0.7
	90	684.3	-1.7	66.2	-0.5	131.6	3.9
11	105	-133.2	1.5	-94.4	0.5	89.3	0.2
	90	133.2	-1.5	6.5	-0.5	49.3	3.9
12	105	-65.7	21.6	-92.1	-2.4	86.1	2.6
	90	65.7	48.2	4.2	2.4	46.1	-39.2
13	105	-110.7	1.0	-92.0	0.5	85.9	0.0
	90	110.7	-1.0	4.1	-0.5	46.0	2.7
14	105	-243.6	1.5	-105.5	0.5	104.5	0.3
	90	243.6	-1.5	17.6	-0.5	64.6	3.9
15	105	210.5	101.6	-89.3	-13.9	82.3	12.3
	90	-210.5	247.2	1.4	13.9	42.3	-212.2
16	105	40.3	-1.3	-23.6	0.4	-7.9	-2.3
	90	-40.3	1.3	-64.3	-0.4	-48.0	-1.2
17	105	6.8	-3.4	-55.0	-0.2	35.2	-4.6
	90	-6.8	3.4	-32.9	0.2	-4.8	-4.8
1	90	-568.4	188.2	-160.6	17.3	153.5	114.6
	91	568.4	119.4	51.6	-17.3	112.1	-28.4
2	90	-334.8	314.2	-146.3	29.5	135.8	191.3
	91	334.8	198.5	37.3	-29.5	94.0	-46.5
3	90	-713.6	188.5	-180.2	17.2	177.6	115.0
	91	713.6	119.1	71.2	-17.2	137.0	-28.2
4	90	-2757.8	-1.7	-266.8	-0.9	284.4	-2.6
	91	2757.8	1.7	157.8	0.9	247.0	-1.6
5	90	813.1	0.8	-20.7	-0.3	-8.8	2.0
	91	-813.1	-0.8	-63.2	0.3	-44.4	-0.1
6	90	226.0	1.8	-54.8	1.2	33.2	3.8
	91	-226.0	-1.8	-29.1	-1.2	-1.1	0.8
7	90	-420.2	125.4	-117.9	11.5	111.1	76.4
	91	420.2	79.6	34.1	-11.5	79.1	-19.1
8	90	-264.4	209.4	-108.4	19.6	99.4	127.5
	91	264.4	132.4	24.5	-19.6	67.0	-31.1
9	90	-517.0	125.6	-131.0	11.4	127.2	76.6
	91	517.0	79.5	47.1	-11.4	95.7	-18.9

Comb.	Nodo	N [kg]	T1-2 [kg]	T1-3 [kg]	Mt [kgm]	M1-3 [kgm]	M1-2 [kgm]
10	90	-1879.8	-1.2	-188.7	-0.6	198.4	-1.8
	91	1879.8	1.2	104.9	0.6	169.0	-1.2
11	90	-687.0	-0.3	-135.6	-0.8	132.9	0.0
	91	687.0	0.3	51.7	0.8	101.5	-0.8
12	90	-616.2	41.7	-131.9	3.3	128.4	25.6
	91	616.2	26.7	48.0	-3.3	96.9	-6.8
13	90	-450.0	-0.5	-102.2	-0.5	91.8	-0.3
	91	450.0	0.5	18.3	0.5	59.1	-0.9
14	90	-939.2	-0.5	-148.0	-0.7	148.2	-0.3
	91	939.2	0.5	64.1	0.7	117.3	-0.8
15	90	-167.6	209.2	-95.4	19.7	83.3	127.3
	91	167.6	132.5	11.5	-19.7	50.4	-31.3
16	90	910.9	0.9	-14.7	-0.3	-16.2	2.2
	91	-910.9	-0.9	-69.2	0.3	-52.0	-0.0
17	90	277.0	2.0	-51.5	1.4	29.2	4.2
	91	-277.0	-2.0	-32.4	-1.4	-5.2	1.0
1	92	958.0	-71.1	61.6	4.7	-88.7	-23.5
	91	-958.0	-71.7	-94.1	-4.7	-106.1	24.2
2	92	997.6	-118.8	49.1	8.4	-73.2	-38.9
	91	-997.6	-119.3	-81.6	-8.4	-90.2	39.5
3	92	1108.1	-71.3	79.2	4.6	-110.2	-23.7
	91	-1108.1	-71.5	-111.7	-4.6	-128.3	24.0
4	92	20.5	0.5	207.4	-0.9	-270.9	-0.3
	91	-20.5	-0.5	-239.9	0.9	-288.2	1.5
5	92	652.2	0.0	-72.8	0.5	81.2	-0.0
	91	-652.2	-0.0	47.8	-0.5	69.5	0.1
6	92	490.0	-0.3	-27.3	1.1	24.4	0.1
	91	-490.0	0.3	2.3	-1.1	12.5	-0.7
7	92	668.3	-47.4	43.2	3.1	-63.1	-15.7
	91	-668.3	-47.9	-68.2	-3.1	-76.2	16.3
8	92	694.7	-79.2	34.9	5.6	-52.8	-25.9
	91	-694.7	-79.6	-59.9	-5.6	-65.7	26.5
9	92	768.3	-47.5	54.9	3.0	-77.4	-15.8
	91	-768.3	-47.7	-79.9	-3.0	-91.1	16.1
10	92	43.3	0.4	140.4	-0.6	-184.5	-0.2
	91	-43.3	-0.4	-165.4	0.6	-197.6	1.1
11	92	649.9	0.1	60.2	-0.5	-84.1	-0.4
	91	-649.9	-0.1	-85.2	0.5	-97.7	0.7
12	92	671.9	-15.8	56.8	0.7	-79.9	-5.5
	91	-671.9	-16.0	-81.8	-0.7	-93.5	5.8
13	92	388.2	0.3	32.2	-0.3	-49.7	-0.1
	91	-388.2	-0.3	-57.2	0.3	-62.1	0.9
14	92	541.6	0.1	77.9	-0.6	-106.2	-0.4
	91	-541.6	-0.1	-102.9	0.6	-119.9	0.8
15	92	594.6	-79.0	23.2	5.7	-38.4	-25.8
	91	-594.6	-79.7	-48.2	-5.7	-50.8	26.6

Comb.	Nodo	N [kg]	T1-2 [kg]	T1-3 [kg]	Mt [kgm]	M1-3 [kgm]	M1-2 [kgm]
16	92	679.4	0.0	-80.8	0.6	91.3	-0.0
	91	-679.4	-0.0	55.8	-0.6	79.5	0.0
17	92	504.4	-0.3	-31.6	1.2	29.9	0.1
	91	-504.4	0.3	6.6	-1.2	18.0	-0.9
1	93	997.6	-71.8	-86.3	-4.7	96.1	-24.9
	92	-997.6	-70.7	53.9	4.7	78.8	23.5
2	93	1001.9	-119.9	-79.8	-8.1	87.6	-41.7
	92	-1001.9	-117.6	47.4	8.1	70.9	38.8
3	93	1160.3	-71.7	-100.9	-4.7	114.6	-24.9
	92	-1160.3	-70.8	68.5	4.7	96.6	23.7
4	93	1152.2	0.4	70.0	-0.1	-99.2	0.6
	92	-1152.2	-0.4	-102.4	0.1	-115.7	0.3
5	93	99.9	0.1	-136.5	0.7	161.0	0.3
	92	-99.9	-0.1	111.6	-0.7	148.4	0.0
6	93	419.1	0.4	-90.3	1.1	103.3	1.2
	92	-419.1	-0.4	65.4	-1.1	90.9	-0.1
7	93	705.1	-47.9	-61.1	-3.1	67.2	-16.6
	92	-705.1	-47.1	36.2	3.1	54.1	15.7
8	93	707.9	-79.9	-56.7	-5.4	61.6	-27.8
	92	-707.9	-78.4	31.8	5.4	48.8	25.9
9	93	813.5	-47.8	-70.8	-3.1	79.6	-16.6
	92	-813.5	-47.2	45.9	3.1	66.0	15.8
10	93	808.1	0.2	43.1	-0.1	-62.9	0.4
	92	-808.1	-0.2	-68.0	0.1	-75.6	0.2
11	93	734.0	0.3	-69.4	0.2	77.9	0.3
	92	-734.0	-0.3	44.5	-0.2	64.1	0.4
12	93	743.7	-15.8	-68.1	-0.9	76.2	-5.4
	92	-743.7	-15.9	43.2	0.9	62.5	5.5
13	93	463.5	0.1	-43.5	0.2	44.9	0.2
	92	-463.5	-0.1	18.6	-0.2	32.4	0.1
14	93	763.8	0.3	-48.1	0.2	51.3	0.3
	92	-763.8	-0.3	23.2	-0.2	37.6	0.4
15	93	599.5	-80.0	-47.0	-5.4	49.2	-27.9
	92	-599.5	-78.3	22.1	5.4	37.0	25.8
16	93	76.1	0.1	-144.6	0.8	171.1	0.3
	92	-76.1	-0.1	119.7	-0.8	158.5	0.0
17	93	421.1	0.5	-94.7	1.2	108.7	1.3
	92	-421.1	-0.5	69.8	-1.2	96.4	-0.1
1	93	-483.4	122.6	52.2	-16.9	-113.0	29.3
	94	483.4	185.0	-161.3	16.9	-154.2	-107.5
2	93	-317.4	205.0	39.8	-28.7	-97.3	48.9
	94	317.4	307.7	-148.8	28.7	-138.7	-177.4
3	93	-602.9	122.4	71.0	-16.8	-136.9	29.2
	94	602.9	185.2	-180.0	16.8	-177.3	-107.7
4	93	1127.8	-1.8	-64.0	0.5	34.6	-0.6

Comb.	Nodo	N [kg]	T1-2 [kg]	T1-3 [kg]	Mt [kgm]	M1-3 [kgm]	M1-2 [kgm]
	94	-1127.8	1.8	-45.1	-0.5	-10.9	-3.9
5	93	-1321.3	0.0	83.2	0.1	-141.3	-0.3
	94	1321.3	-0.0	-167.1	-0.1	-171.9	-0.1
6	93	-274.6	0.5	48.2	-0.7	-96.9	-1.3
	94	274.6	-0.5	-132.1	0.7	-128.7	0.5
7	93	-343.9	81.6	34.3	-11.3	-79.4	19.5
	94	343.9	123.4	-118.1	11.3	-111.4	-71.8
8	93	-233.2	136.6	26.0	-19.1	-68.9	32.6
	94	233.2	205.2	-109.8	19.1	-101.0	-118.4
9	93	-423.6	81.5	46.8	-11.2	-95.3	19.4
	94	423.6	123.5	-130.7	11.2	-126.8	-72.0
10	93	730.2	-1.3	-43.2	0.4	19.0	-0.4
	94	-730.2	1.3	-40.7	-0.4	-15.9	-2.8
11	93	-520.6	-0.8	49.4	0.5	-98.5	-0.3
	94	520.6	0.8	-133.3	-0.5	-130.1	-1.8
12	93	-473.0	26.6	46.3	-3.4	-94.7	6.3
	94	473.0	41.7	-130.2	3.4	-126.3	-25.2
13	93	-304.4	-0.6	16.7	0.3	-56.9	-0.2
	94	304.4	0.6	-100.5	-0.3	-89.8	-1.3
14	93	-280.3	-0.9	32.5	0.5	-77.1	-0.3
	94	280.3	0.9	-116.4	-0.5	-109.3	-2.0
15	93	-153.6	136.7	13.4	-19.2	-53.0	32.7
	94	153.6	205.1	-97.3	19.2	-85.6	-118.3
16	93	-1406.6	0.1	89.2	0.1	-149.0	-0.3
	94	1406.6	-0.1	-173.1	-0.1	-179.3	0.0
17	93	-275.4	0.7	51.4	-0.8	-101.0	-1.4
	94	275.4	-0.7	-135.3	0.8	-132.7	0.7
1	96	31.1	69.3	103.7	6.8	-65.1	42.4
	97	-31.1	34.9	69.8	-6.8	22.5	0.6
2	96	-2.7	67.6	172.1	11.8	-106.7	40.5
	97	2.7	36.5	117.0	-11.8	37.8	-1.6
3	96	5.0	73.1	104.0	6.7	-65.7	47.1
	97	-5.0	31.0	69.5	-6.7	22.4	5.7
4	96	-2123.3	103.6	2.2	-0.6	-4.5	84.2
	97	2123.3	0.5	-2.2	0.6	-1.1	44.9
5	96	1657.4	23.1	0.3	0.4	-0.6	-4.0
	97	-1657.4	57.0	-0.3	-0.4	-0.1	-38.3
6	96	1069.0	32.1	1.8	1.0	-3.5	6.9
	97	-1069.0	48.0	-1.8	-1.0	-1.1	-26.8
7	96	27.2	52.2	69.2	4.5	-43.4	31.4
	97	-27.2	27.9	46.5	-4.5	15.0	-0.9
8	96	4.7	51.1	114.8	7.9	-71.2	30.1
	97	-4.7	29.0	78.0	-7.9	25.2	-2.4
9	96	9.8	54.8	69.4	4.5	-43.9	34.4
	97	-9.8	25.3	46.3	-4.5	14.9	2.5
10	96	-1409.1	75.1	1.5	-0.4	-3.1	59.2

Comb.	Nodo	N [kg]	T1-2 [kg]	T1-3 [kg]	Mt [kgm]	M1-3 [kgm]	M1-2 [kgm]
	97	1409.1	5.0	-1.5	0.4	-0.7	28.6
11	96	35.9	54.9	0.9	-0.4	-1.9	34.5
	97	-35.9	25.2	-0.9	0.4	-0.3	2.7
12	96	25.5	54.5	23.7	1.2	-15.9	34.1
	97	-25.5	25.6	14.8	-1.2	4.8	2.1
13	96	53.8	48.8	0.5	-0.2	-1.0	27.2
	97	-53.8	31.3	-0.5	0.2	-0.2	-5.3
14	96	-257.3	59.3	1.1	-0.4	-2.2	39.9
	97	257.3	20.8	-1.1	0.4	-0.4	8.4
15	96	22.1	48.5	114.6	7.9	-70.8	27.0
	97	-22.1	31.6	78.2	-7.9	25.3	-5.8
16	96	1786.4	21.1	0.2	0.5	-0.5	-6.5
	97	-1786.4	59.0	-0.2	-0.5	-0.1	-40.9
17	96	1150.8	30.9	1.9	1.1	-3.7	5.4
	97	-1150.8	49.2	-1.9	-1.1	-1.2	-28.4
1	97	864.1	40.8	81.1	2.1	-22.6	24.6
	98	-864.1	24.2	92.1	-2.1	36.3	-3.9
2	97	688.2	38.8	135.4	3.6	-37.7	22.1
	98	-688.2	26.2	153.3	-3.6	60.2	-6.2
3	97	1045.7	44.4	81.0	2.0	-22.5	29.2
	98	-1045.7	20.6	92.2	-2.0	36.4	0.5
4	97	39.8	102.5	-0.5	-0.4	1.0	101.5
	98	-39.8	-37.5	0.5	0.4	0.3	73.4
5	97	924.1	-15.1	-0.0	0.5	0.0	-39.4
	98	-924.1	65.1	0.0	-0.5	0.1	-60.8
6	97	357.8	1.1	-0.4	0.9	1.0	-19.2
	98	-357.8	48.9	0.4	-0.9	-0.2	-40.6
7	97	617.4	30.7	54.1	1.4	-15.0	18.0
	98	-617.4	19.3	61.4	-1.4	24.2	-3.8
8	97	500.1	29.4	90.3	2.4	-25.1	16.3
	98	-500.1	20.6	102.2	-2.4	40.1	-5.4
9	97	738.4	33.1	54.0	1.3	-15.0	21.1
	98	-738.4	16.9	61.5	-1.3	24.3	-0.9
10	97	67.8	71.8	-0.3	-0.3	0.7	69.3
	98	-67.8	-21.8	0.3	0.3	0.2	47.7
11	97	821.1	34.0	-0.2	-0.2	0.2	22.2
	98	-821.1	16.0	0.2	0.2	0.3	0.2
12	97	772.8	33.4	17.9	0.3	-4.8	21.5
	98	-772.8	16.6	20.6	-0.3	8.3	-0.4
13	97	507.3	28.8	-0.1	-0.1	0.1	15.5
	98	-507.3	21.2	0.1	0.1	0.1	-6.1
14	97	686.4	41.9	-0.3	-0.2	0.3	32.1
	98	-686.4	8.1	0.3	0.2	0.3	10.2
15	97	379.1	27.0	90.3	2.5	-25.2	13.2
	98	-379.1	23.0	102.2	-2.5	40.0	-8.3
16	97	963.6	-18.5	-0.0	0.5	0.0	-43.7

Comb.	Nodo	N [kg]	T1-2 [kg]	T1-3 [kg]	Mt [kgm]	M1-3 [kgm]	M1-2 [kgm]
	98	-963.6	68.5	0.0	-0.5	0.1	-65.1
17	97	351.4	-1.1	-0.4	1.0	1.1	-21.9
	98	-351.4	51.1	0.4	-1.0	-0.2	-43.3
1	98	624.5	6.3	91.4	-1.4	-36.3	-18.4
	99	-624.5	58.5	81.4	1.4	23.9	-46.6
2	98	431.6	8.5	152.2	-2.5	-60.2	-15.8
	99	-431.6	56.4	135.8	2.5	39.8	-43.9
3	98	812.5	2.5	91.4	-1.3	-36.4	-23.1
	99	-812.5	62.3	81.4	1.3	23.9	-51.5
4	98	1213.9	70.6	-0.4	0.1	-0.3	61.9
	99	-1213.9	-5.8	0.4	-0.1	1.4	33.3
5	98	-9.6	-29.8	0.4	0.6	-0.1	-57.9
	99	9.6	79.7	-0.4	-0.6	-0.9	-78.7
6	98	134.1	-13.7	0.3	0.9	0.2	-37.7
	99	-134.1	63.6	-0.3	-0.9	-0.8	-58.6
7	98	443.6	6.3	60.9	-0.9	-24.2	-12.4
	99	-443.6	43.5	54.3	0.9	15.9	-34.0
8	98	315.0	7.8	101.5	-1.7	-40.1	-10.6
	99	-315.0	42.1	90.5	1.7	26.5	-32.1
9	98	568.9	3.8	60.9	-0.9	-24.3	-15.5
	99	-568.9	46.1	54.2	0.9	15.9	-37.2
10	98	836.5	49.2	-0.3	0.1	-0.2	41.2
	99	-836.5	0.7	0.3	-0.1	0.9	19.3
11	98	682.8	4.0	0.1	0.2	-0.3	-15.1
	99	-682.8	45.8	-0.1	-0.2	0.1	-37.0
12	98	627.3	4.5	20.4	-0.1	-8.3	-14.6
	99	-627.3	45.4	18.0	0.1	5.4	-36.4
13	98	380.5	11.2	0.0	0.2	-0.1	-6.4
	99	-380.5	38.7	-0.0	-0.2	0.0	-27.8
14	98	731.6	12.8	0.0	0.2	-0.3	-4.2
	99	-731.6	37.1	-0.0	-0.2	0.2	-26.1
15	98	189.7	10.3	101.4	-1.7	-40.1	-7.5
	99	-189.7	39.5	90.6	1.7	26.5	-28.9
16	98	-35.7	-33.3	0.4	0.6	-0.0	-62.3
	99	35.7	83.2	-0.4	-0.6	-1.0	-83.0
17	98	119.6	-15.9	0.3	1.0	0.2	-40.4
	99	-119.6	65.7	-0.3	-1.0	-0.9	-61.3
1	99	-655.6	25.7	73.3	-6.2	-24.1	-12.5
	100	655.6	78.5	100.2	6.2	57.8	-53.6
2	99	-729.2	28.2	122.2	-10.6	-40.1	-9.2
	100	729.2	75.9	166.9	10.6	96.0	-50.5
3	99	-694.7	21.0	73.3	-6.1	-24.1	-18.6
	100	694.7	83.2	100.2	6.1	57.8	-59.2
4	99	1321.2	64.1	2.3	0.2	-1.3	37.0
	100	-1321.2	40.0	-2.3	-0.2	-4.4	-6.9

Comb.	Nodo	N [kg]	T1-2 [kg]	T1-3 [kg]	Mt [kgm]	M1-3 [kgm]	M1-2 [kgm]
5	99	-1461.1	3.1	-1.7	0.2	1.0	-31.1
	100	1461.1	77.0	1.7	-0.2	3.3	-61.4
6	99	-975.0	12.4	-1.1	-0.3	0.9	-19.1
	100	975.0	67.7	1.1	0.3	2.0	-50.2
7	99	-465.9	21.3	48.8	-4.1	-16.0	-7.6
	100	465.9	58.8	66.8	4.1	38.6	-39.3
8	99	-515.0	23.0	81.5	-7.0	-26.7	-5.4
	100	515.0	57.1	111.3	7.0	64.0	-37.3
9	99	-491.9	18.2	48.8	-4.0	-16.0	-11.7
	100	491.9	61.9	66.8	4.0	38.5	-43.1
10	99	852.0	46.9	1.5	0.2	-0.9	25.4
	100	-852.0	33.2	-1.5	-0.2	-2.9	-8.2
11	99	-379.8	18.1	-0.1	0.3	-0.0	-11.8
	100	379.8	62.0	0.1	-0.3	0.3	-43.2
12	99	-408.6	18.7	16.2	-1.1	-5.4	-11.1
	100	408.6	61.4	22.3	1.1	13.0	-42.5
13	99	-288.4	26.3	-0.1	0.2	-0.0	-1.2
	100	288.4	53.9	0.1	-0.2	0.3	-33.4
14	99	-135.2	23.4	0.2	0.3	-0.2	-4.9
	100	135.2	56.7	-0.2	-0.3	-0.4	-36.7
15	99	-488.9	26.1	81.5	-7.1	-26.7	-1.3
	100	488.9	54.0	111.3	7.1	64.1	-33.5
16	99	-1557.7	1.1	-1.8	0.2	1.1	-33.7
	100	1557.7	79.0	1.8	-0.2	3.5	-63.9
17	99	-1032.4	11.1	-1.2	-0.4	1.0	-20.8
	100	1032.4	69.0	1.2	0.4	2.1	-51.7
1	100	-488.0	55.2	105.9	3.4	-60.6	25.6
	101	488.0	48.8	67.4	-3.4	12.5	-17.6
2	100	-527.9	56.3	176.3	5.7	-101.3	26.9
	101	527.9	47.7	112.5	-5.7	21.5	-16.3
3	100	-542.0	54.5	105.8	3.4	-60.5	24.8
	101	542.0	49.5	67.4	-3.4	12.5	-18.5
4	100	-915.7	96.0	1.7	-0.4	-3.9	74.6
	101	915.7	8.0	-1.7	0.4	-0.5	35.4
5	100	72.6	20.9	0.2	0.5	1.0	-6.3
	101	-72.6	59.1	-0.2	-0.5	-1.8	-41.5
6	100	-258.7	45.4	2.2	0.8	-2.9	23.3
	101	258.7	34.6	-2.2	-0.8	-2.8	-9.7
7	100	-346.7	42.6	70.6	2.3	-40.4	19.8
	101	346.7	37.4	44.9	-2.3	8.3	-13.4
8	100	-373.3	43.3	117.5	3.8	-67.5	20.7
	101	373.3	36.7	75.0	-3.8	14.3	-12.5
9	100	-382.7	42.1	70.6	2.2	-40.3	19.3
	101	382.7	37.9	44.9	-2.2	8.2	-14.0
10	100	-631.9	69.8	1.2	-0.3	-2.6	52.5
	101	631.9	10.2	-1.2	0.3	-0.4	21.9

Comb.	Nodo	N [kg]	T1-2 [kg]	T1-3 [kg]	Mt [kgm]	M1-3 [kgm]	M1-2 [kgm]
11	100	-314.5	41.4	0.2	-0.1	0.3	18.4
	101	314.5	38.6	-0.2	0.1	-0.7	-15.0
12	100	-330.9	41.7	23.6	0.7	-13.2	18.8
	101	330.9	38.3	14.9	-0.7	2.3	-14.5
13	100	-220.4	42.5	0.2	-0.0	0.1	19.8
	101	220.4	37.5	-0.2	0.0	-0.6	-13.4
14	100	-382.6	47.0	0.4	-0.1	-0.2	25.1
	101	382.6	33.0	-0.4	0.1	-0.7	-7.7
15	100	-337.4	43.7	117.6	3.8	-67.6	21.2
	101	337.4	36.3	74.9	-3.8	14.3	-11.9
16	100	94.2	19.1	0.2	0.5	1.0	-8.4
	101	-94.2	60.9	-0.2	-0.5	-1.9	-43.9
17	100	-263.6	45.6	2.4	0.9	-3.2	23.5
	101	263.6	34.4	-2.4	-0.9	-3.0	-9.5
1	101	-224.6	54.2	70.2	-4.1	-12.5	24.7
	102	224.6	49.8	103.0	4.1	53.5	-19.3
2	101	-225.2	55.0	118.0	-6.9	-21.6	25.7
	102	225.2	49.0	170.7	6.9	87.5	-18.3
3	101	-286.7	53.7	70.1	-4.1	-12.5	24.2
	102	286.7	50.3	103.1	4.1	53.7	-19.9
4	101	1418.9	93.3	0.7	-0.4	0.5	75.1
	102	-1418.9	10.7	-0.7	0.4	-2.3	28.2
5	101	-1062.9	20.7	-2.0	0.5	1.9	-8.0
	102	1062.9	59.3	2.0	-0.5	2.7	-40.2
6	101	-641.4	44.1	-1.5	0.6	2.9	22.1
	102	641.4	35.9	1.5	-0.6	-0.8	-11.9
7	101	-147.2	41.7	46.7	-2.7	-8.3	19.1
	102	147.2	38.3	68.8	2.7	35.8	-14.8
8	101	-147.6	42.2	78.6	-4.6	-14.3	19.7
	102	147.6	37.8	113.9	4.6	58.5	-14.1
9	101	-188.6	41.4	46.7	-2.7	-8.2	18.7
	102	188.6	38.6	68.8	2.7	36.0	-15.2
10	101	948.5	67.8	0.4	-0.2	0.4	52.7
	102	-948.5	12.2	-0.4	0.2	-1.4	16.9
11	101	-156.2	40.8	-1.0	0.0	0.8	18.0
	102	156.2	39.2	1.0	-0.0	1.8	-15.8
12	101	-159.9	41.1	14.9	-0.9	-2.2	18.3
	102	159.9	38.9	23.6	0.9	13.2	-15.6
13	101	-48.8	41.6	-0.8	0.0	0.6	18.9
	102	48.8	38.4	0.8	-0.0	1.4	-14.9
14	101	59.3	46.2	-0.8	-0.0	0.7	24.8
	102	-59.3	33.8	0.8	0.0	1.2	-9.3
15	101	-106.2	42.6	78.7	-4.6	-14.4	20.1
	102	106.2	37.5	113.8	4.6	58.4	-13.7
16	101	-1146.7	19.0	-2.1	0.5	2.0	-10.2
	102	1146.7	61.0	2.1	-0.5	2.8	-42.3

Comb.	Nodo	N [kg]	T1-2 [kg]	T1-3 [kg]	Mt [kgm]	M1-3 [kgm]	M1-2 [kgm]
17	101	-691.3	44.3	-1.6	0.7	3.0	22.3
	102	691.3	35.7	1.6	-0.7	-1.0	-11.6
1	111	148.1	227.9	-46.4	9.3	11.4	202.6
	125	-148.1	86.4	-68.0	-9.3	-41.1	-8.1
2	111	331.4	379.5	-47.8	15.4	13.3	337.0
	125	-331.4	144.4	-66.6	-15.4	-39.2	-13.8
3	111	132.8	227.8	-51.2	9.2	18.0	202.4
	125	-132.8	86.6	-63.2	-9.2	-34.5	-8.2
4	111	-553.2	-6.7	-126.6	0.5	121.9	-19.0
	125	553.2	6.7	12.2	-0.5	68.9	0.7
5	111	-135.7	1.7	14.8	0.5	-61.1	3.4
	125	135.7	-1.7	-102.8	-0.5	-100.6	0.3
6	111	-17.9	3.3	-34.3	0.8	6.8	6.2
	125	17.9	-3.3	-53.7	-0.8	-33.4	2.6
7	111	91.5	151.9	-35.8	6.2	8.9	135.1
	125	-91.5	57.6	-52.2	-6.2	-31.5	-5.4
8	111	213.7	253.0	-36.7	10.3	10.1	224.7
	125	-213.7	96.3	-51.3	-10.3	-30.2	-9.2
9	111	81.3	151.9	-39.0	6.1	13.3	135.0
	125	-81.3	57.7	-49.1	-6.1	-27.2	-5.5
10	111	-376.0	-4.4	-89.2	0.4	82.5	-12.6
	125	376.0	4.4	1.2	-0.4	41.8	0.5
11	111	-95.0	0.2	-38.8	-0.0	13.1	0.5
	125	95.0	-0.2	-49.2	0.0	-27.3	0.1
12	111	-34.6	50.8	-39.2	2.0	13.5	45.3
	125	34.6	19.1	-48.8	-2.0	-26.9	-1.8
13	111	-69.6	0.3	-35.4	0.1	8.3	0.6
	125	69.6	-0.3	-52.6	-0.1	-32.0	0.1
14	111	-152.6	-0.7	-49.7	0.1	28.0	-2.1
	125	152.6	0.7	-38.3	-0.1	-12.5	0.2
15	111	223.9	253.1	-33.5	10.3	5.7	224.9
	125	-223.9	96.2	-54.5	-10.3	-34.6	-9.1
16	111	-144.7	1.8	18.8	0.5	-66.6	3.7
	125	144.7	-1.8	-106.8	-0.5	-106.0	0.4
17	111	-13.6	3.6	-34.4	0.9	6.9	6.8
	125	13.6	-3.6	-53.6	-0.9	-33.4	2.9
1	125	158.7	136.5	-43.9	4.0	27.8	10.3
	126	-158.7	177.8	-27.6	-4.0	-5.3	-67.1
2	125	346.0	227.9	-41.2	6.5	24.1	17.4
	126	-346.0	295.9	-30.3	-6.5	-9.0	-110.9
3	125	142.4	136.4	-48.5	3.9	34.1	10.4
	126	-142.4	177.9	-23.0	-3.9	1.0	-67.4
4	125	-578.6	-1.2	-142.3	-0.6	162.8	-0.7
	126	578.6	1.2	70.8	0.6	130.3	-2.5
5	125	-113.5	-0.2	40.0	0.7	-80.1	-1.5

Comb.	Nodo	N [kg]	T1-2 [kg]	T1-3 [kg]	Mt [kgm]	M1-3 [kgm]	M1-2 [kgm]
	126	113.5	0.2	-95.0	-0.7	-105.4	0.1
6	125	-11.9	-1.0	8.5	1.2	-36.8	-2.9
	126	11.9	1.0	-63.5	-1.2	-62.2	0.3
7	125	99.2	91.0	-32.9	2.7	20.1	6.9
	126	-99.2	118.5	-22.1	-2.7	-5.3	-44.7
8	125	224.1	152.0	-31.1	4.4	17.7	11.6
	126	-224.1	197.3	-23.9	-4.4	-7.8	-74.0
9	125	88.4	91.0	-36.0	2.6	24.3	6.9
	126	-88.4	118.6	-19.0	-2.6	-1.1	-44.9
10	125	-392.3	-0.8	-98.5	-0.4	110.2	-0.5
	126	392.3	0.8	43.5	0.4	85.1	-1.7
11	125	-91.7	-0.4	-37.3	0.1	26.1	-0.1
	126	91.7	0.4	-17.7	-0.1	0.7	-0.9
12	125	-30.1	30.1	-36.5	0.9	25.1	2.2
	126	30.1	39.8	-18.5	-0.9	-0.3	-15.6
13	125	-65.2	-0.2	-30.6	0.2	16.9	-0.1
	126	65.2	0.2	-24.4	-0.2	-8.5	-0.4
14	125	-153.4	-0.5	-50.0	0.0	43.6	-0.2
	126	153.4	0.5	-5.0	-0.0	18.3	-1.1
15	125	234.9	152.0	-28.0	4.4	13.5	11.6
	126	-234.9	197.2	-27.0	-4.4	-12.0	-73.7
16	125	-121.9	-0.2	45.7	0.8	-87.9	-0.3
	126	121.9	0.2	-100.7	-0.8	-113.2	0.1
17	125	-7.7	-1.1	11.6	1.2	-41.1	-2.8
	126	7.7	1.1	-66.6	-1.2	-66.5	0.4
1	126	161.3	180.2	-48.8	-1.0	34.6	67.0
	127	-161.3	134.5	-22.7	1.0	1.3	-4.2
2	126	352.5	300.0	-44.8	-2.1	29.1	110.8
	127	-352.5	224.5	-26.8	2.1	-4.2	-6.8
3	126	142.8	180.3	-44.1	-0.9	28.0	67.4
	127	-142.8	134.4	-27.5	0.9	-5.2	-4.2
4	126	-626.0	0.5	-150.5	0.2	174.0	2.5
	127	626.0	-0.5	78.9	-0.2	141.8	-1.1
5	126	-100.5	0.8	24.8	0.8	-59.2	-0.1
	127	100.5	-0.8	-79.9	-0.8	-85.0	2.0
6	126	-11.4	1.5	-6.6	1.1	-16.0	-0.4
	127	11.4	-1.5	-48.5	-1.1	-41.7	4.2
7	126	101.3	120.1	-38.3	-0.6	27.6	44.7
	127	-101.3	89.7	-16.8	0.6	2.0	-2.8
8	126	228.8	200.0	-35.6	-1.4	23.9	73.9
	127	-228.8	149.7	-19.5	1.4	-1.7	-4.6
9	126	89.0	120.2	-35.1	-0.6	23.2	44.9
	127	-89.0	89.6	-19.9	0.6	-2.4	-2.8
10	126	-423.5	0.3	-106.1	0.1	120.6	1.7
	127	423.5	-0.3	51.0	-0.1	95.7	-0.8
11	126	-94.3	0.3	-38.5	0.5	27.9	0.9

Comb.	Nodo	N [kg]	T1-2 [kg]	T1-3 [kg]	Mt [kgm]	M1-3 [kgm]	M1-2 [kgm]
	127	94.3	-0.3	-16.5	-0.5	2.3	-0.2
12	126	-31.4	40.2	-37.2	0.1	26.2	15.6
	127	31.4	29.7	-17.8	-0.1	0.6	-1.1
13	126	-64.3	0.1	-42.8	0.3	33.8	0.4
	127	64.3	-0.1	-12.3	-0.3	8.2	-0.1
14	126	-161.9	0.3	-51.3	0.4	45.5	1.1
	127	161.9	-0.3	-3.7	-0.4	20.0	-0.3
15	126	241.1	199.9	-38.8	-1.4	28.3	73.7
	127	-241.1	149.7	-16.3	1.4	2.7	-4.5
16	126	-108.4	0.9	30.5	0.8	-67.0	-0.1
	127	108.4	-0.9	-85.6	-0.8	-92.8	2.2
17	126	-7.2	1.7	-3.5	1.2	-20.3	-0.4
	127	7.2	-1.7	-51.6	-1.2	-46.0	4.6
1	127	149.8	82.5	-121.5	-7.0	114.2	1.8
	112	-149.8	231.5	7.2	7.0	62.5	-206.3
2	127	343.9	135.9	-112.4	-12.0	101.8	2.8
	112	-343.9	387.4	-1.8	12.0	50.0	-348.2
3	127	128.6	82.8	-118.2	-7.0	109.8	1.8
	112	-128.6	231.2	4.0	7.0	58.0	-205.7
4	127	-681.0	2.7	-210.8	0.3	235.7	1.2
	112	681.0	-2.7	96.5	-0.3	186.3	6.1
5	127	24.7	-0.9	-31.0	0.6	2.5	-2.1
	112	-24.7	0.9	-56.9	-0.6	-38.1	-0.5
6	127	18.5	-3.0	-58.6	1.0	40.3	-4.3
	112	-18.5	3.0	-29.3	-1.0	0.1	-4.0
7	127	93.1	55.1	-92.3	-4.7	86.3	1.2
	112	-93.1	154.2	4.4	4.7	46.6	-137.2
8	127	222.5	90.7	-86.3	-8.0	78.1	1.9
	112	-222.5	258.1	-1.6	8.0	38.3	-231.8
9	127	78.9	55.3	-90.2	-4.6	83.4	1.2
	112	-78.9	154.0	2.3	4.6	43.6	-136.8
10	127	-460.8	1.9	-151.9	0.2	167.3	0.8
	112	460.8	-1.9	64.0	-0.2	129.1	4.4
11	127	-105.9	1.8	-94.6	0.3	89.4	0.2
	112	105.9	-1.8	6.7	-0.3	49.6	4.6
12	127	-42.3	19.6	-92.1	-1.4	86.0	0.6
	112	42.3	50.2	4.2	1.4	46.2	-42.6
13	127	-71.3	1.3	-91.9	0.2	85.8	0.2
	112	71.3	-1.3	4.1	-0.2	46.1	3.3
14	127	-178.9	1.8	-105.2	0.3	103.8	0.4
	112	178.9	-1.8	17.3	-0.3	64.3	4.6
15	127	236.7	90.5	-88.5	-8.0	81.0	1.8
	112	-236.7	258.3	0.6	8.0	41.2	-232.3
16	127	36.8	-1.1	-26.0	0.6	-4.3	-2.2
	112	-36.8	1.1	-61.9	-0.6	-45.0	-0.8
17	127	28.4	-3.4	-55.9	1.0	36.5	-4.7

Comb.	Nodo	N [kg]	T1-2 [kg]	T1-3 [kg]	Mt [kgm]	M1-3 [kgm]	M1-2 [kgm]
	112	-28.4	3.4	-32.0	-1.0	-3.7	-4.6
1	112	196.0	187.6	-152.8	13.5	147.8	132.8
	113	-196.0	98.5	48.7	-13.5	104.4	-21.2
2	112	342.3	313.4	-138.5	22.9	129.9	222.1
	113	-342.3	163.5	34.4	-22.9	86.6	-34.4
3	112	193.3	187.8	-171.6	13.3	171.3	133.0
	113	-193.3	98.3	67.4	-13.3	127.8	-21.0
4	112	-637.1	-2.0	-256.2	-0.5	276.0	-3.5
	113	637.1	2.0	152.0	0.5	234.9	-1.5
5	112	278.8	1.0	-19.5	-0.1	-8.3	2.5
	113	-278.8	-1.0	-60.6	0.1	-43.3	0.2
6	112	139.6	2.7	-51.8	1.0	31.8	5.3
	113	-139.6	-2.7	-28.3	-1.0	-2.4	1.6
7	112	126.5	125.0	-112.3	9.0	107.1	88.4
	113	-126.5	65.8	32.2	-9.0	73.7	-14.3
8	112	224.1	208.9	-102.8	15.2	95.2	148.0
	113	-224.1	109.1	22.7	-15.2	61.8	-23.1
9	112	124.8	125.1	-124.8	8.9	122.8	88.6
	113	-124.8	65.6	44.7	-8.9	89.3	-14.1
10	112	-428.8	-1.4	-181.2	-0.4	192.6	-2.4
	113	428.8	1.4	101.1	0.4	160.7	-1.2
11	112	-24.9	-0.6	-129.8	-0.5	129.1	-0.7
	113	24.9	0.6	49.7	0.5	95.6	-0.9
12	112	24.2	41.3	-126.1	2.6	124.4	29.1
	113	-24.2	22.3	46.0	-2.6	90.9	-5.3
13	112	-26.4	-0.7	-97.9	-0.3	89.1	-0.7
	113	26.4	0.7	17.8	0.3	55.6	-1.0
14	112	-106.4	-0.7	-141.7	-0.5	143.9	-1.0
	113	106.4	0.7	61.6	0.5	110.7	-0.9
15	112	225.9	208.8	-90.3	15.3	79.5	147.9
	113	-225.9	109.2	10.2	-15.3	46.2	-23.2
16	112	303.9	1.2	-13.7	-0.1	-15.5	2.8
	113	-303.9	-1.2	-66.4	0.1	-50.6	0.3
17	112	153.9	3.1	-48.6	1.1	27.9	5.8
	113	-153.9	-3.1	-31.5	-1.1	-6.4	1.9
1	114	246.2	-157.2	40.9	3.5	-78.1	-61.3
	113	-246.2	-128.6	-105.9	-3.5	-105.3	25.6
2	114	380.5	-262.0	28.7	6.4	-62.9	-101.4
	113	-380.5	-214.2	-93.7	-6.4	-90.0	41.7
3	114	256.6	-157.4	57.6	3.4	-98.9	-61.6
	113	-256.6	-128.4	-122.6	-3.4	-126.2	25.3
4	114	-310.8	0.2	182.8	-0.9	-256.0	-0.8
	113	310.8	-0.2	-247.8	0.9	-282.2	1.4
5	114	137.5	-0.2	-84.5	0.5	85.2	-0.3
	113	-137.5	0.2	34.5	-0.5	63.5	-0.2

Comb.	Nodo	N [kg]	T1-2 [kg]	T1-3 [kg]	Mt [kgm]	M1-3 [kgm]	M1-2 [kgm]
6	114	92.2	-0.7	-40.7	1.0	30.3	0.0
	113	-92.2	0.7	-9.3	-1.0	9.0	-1.5
7	114	163.6	-104.7	27.5	2.3	-55.1	-40.9
	113	-163.6	-85.8	-77.5	-2.3	-76.1	17.2
8	114	253.1	-174.6	19.4	4.2	-45.0	-67.6
	113	-253.1	-142.9	-69.4	-4.2	-65.9	27.9
9	114	170.4	-104.9	38.6	2.2	-69.1	-41.1
	113	-170.4	-85.6	-88.6	-2.2	-90.0	17.0
10	114	-207.8	0.2	122.1	-0.6	-173.8	-0.6
	113	207.8	-0.2	-172.1	0.6	-194.0	1.1
11	114	29.2	-0.0	44.0	-0.5	-75.7	-0.9
	113	-29.2	0.0	-94.0	0.5	-96.8	0.8
12	114	74.7	-35.0	40.7	0.4	-71.6	-14.3
	113	-74.7	-28.5	-90.7	-0.4	-92.6	6.2
13	114	9.3	0.2	17.3	-0.3	-42.4	-0.4
	113	-9.3	-0.2	-67.3	0.3	-63.4	1.0
14	114	-17.4	-0.0	61.2	-0.6	-97.3	-0.9
	113	17.4	0.0	-111.2	0.6	-118.2	0.8
15	114	246.2	-174.5	8.2	4.3	-31.1	-67.4
	113	-246.2	-143.0	-58.2	-4.3	-51.9	28.1
16	114	149.0	-0.2	-92.4	0.5	95.1	-0.3
	113	-149.0	0.2	42.4	-0.5	73.4	-0.3
17	114	100.4	-0.7	-45.0	1.1	35.7	0.0
	113	-100.4	0.7	-5.0	-1.1	14.3	-1.8
1	115	268.3	-128.4	-98.6	-3.6	96.1	-26.3
	114	-268.3	-156.5	33.8	3.6	69.0	61.3
2	115	395.1	-214.4	-92.4	-6.2	88.3	-43.8
	114	-395.1	-260.6	27.6	6.2	61.3	101.4
3	115	283.8	-128.3	-112.4	-3.5	113.3	-26.2
	114	-283.8	-156.7	47.6	3.5	86.2	61.6
4	115	164.4	0.4	53.0	-0.1	-92.4	0.2
	114	-164.4	-0.4	-117.8	0.1	-120.5	0.8
5	115	-115.5	0.6	-144.4	0.7	159.1	0.3
	114	115.5	-0.6	94.6	-0.7	138.9	0.3
6	115	44.5	1.0	-100.0	1.1	103.8	2.0
	114	-44.5	-1.0	50.1	-1.1	83.3	-0.0
7	115	181.4	-85.6	-70.8	-2.4	67.6	-17.5
	114	-181.4	-104.4	20.9	2.4	46.8	40.9
8	115	266.0	-142.9	-66.7	-4.1	62.4	-29.2
	114	-266.0	-173.7	16.8	4.1	41.7	67.6
9	115	191.8	-85.5	-80.0	-2.3	79.1	-17.5
	114	-191.8	-104.5	30.2	2.3	58.2	41.1
10	115	112.1	0.3	30.2	-0.0	-58.0	0.2
	114	-112.1	-0.3	-80.1	0.0	-79.6	0.6
11	115	58.5	0.4	-78.6	0.3	77.3	0.1
	114	-58.5	-0.4	28.7	-0.3	56.4	0.9

Comb.	Nodo	N [kg]	T1-2 [kg]	T1-3 [kg]	Mt [kgm]	M1-3 [kgm]	M1-2 [kgm]
12	115	101.5	-28.2	-77.3	-0.6	75.8	-5.7
	114	-101.5	-35.1	27.5	0.6	54.9	14.3
13	115	33.6	0.2	-53.9	0.2	46.6	0.1
	114	-33.6	-0.2	4.1	-0.2	25.7	0.4
14	115	70.7	0.4	-58.0	0.2	51.7	0.1
	114	-70.7	-0.4	8.1	-0.2	30.6	0.9
15	115	255.6	-143.0	-57.5	-4.2	50.9	-29.2
	114	-255.6	-173.6	7.6	4.2	30.2	67.4
16	115	-126.6	0.2	-152.4	0.8	168.9	0.3
	114	126.6	-0.2	102.5	-0.8	148.8	0.3
17	115	46.6	0.9	-104.3	1.2	109.2	2.2
	114	-46.6	-0.9	54.4	-1.2	88.7	-0.0
1	115	250.0	101.6	50.6	-13.3	-106.8	22.0
	116	-250.0	184.5	-154.8	13.3	-150.3	-125.7
2	115	377.1	169.9	38.6	-22.7	-91.8	36.7
	116	-377.1	307.0	-142.7	22.7	-135.1	-208.3
3	115	260.9	101.5	68.7	-13.2	-129.3	22.0
	116	-260.9	184.6	-172.8	13.2	-172.9	-126.0
4	115	422.3	-1.5	-61.2	0.5	34.3	-0.2
	116	-422.3	1.5	-43.0	-0.5	-11.5	-3.6
5	115	-265.3	-0.7	69.4	0.2	-120.8	-0.3
	116	265.3	0.7	-149.5	-0.2	-153.1	-1.3
6	115	32.3	-2.3	10.4	-0.4	-46.3	-2.2
	116	-32.3	2.3	-90.5	0.4	-79.9	-3.6
7	115	170.4	67.7	33.3	-8.9	-75.1	14.7
	116	-170.4	123.1	-113.4	8.9	-108.5	-84.0
8	115	255.1	113.2	25.2	-15.1	-65.0	24.5
	116	-255.1	204.7	-105.3	15.1	-98.4	-139.0
9	115	177.7	67.6	45.3	-8.8	-90.1	14.6
	116	-177.7	123.1	-125.4	8.8	-123.6	-84.1
10	115	285.3	-1.1	-41.3	0.3	19.0	-0.2
	116	-285.3	1.1	-38.8	-0.3	-16.0	-2.5
11	115	48.6	-0.6	47.8	0.5	-93.2	-0.1
	116	-48.6	0.6	-128.0	-0.5	-126.8	-1.5
12	115	91.2	22.1	44.9	-2.6	-89.5	4.8
	116	-91.2	41.5	-125.0	2.6	-123.1	-29.0
13	115	34.3	-0.5	16.4	0.3	-53.9	-0.1
	116	-34.3	0.5	-96.5	-0.3	-87.4	-1.2
14	115	97.2	-0.7	31.6	0.5	-72.7	-0.1
	116	-97.2	0.7	-111.7	-0.5	-106.6	-1.7
15	115	247.8	113.3	13.2	-15.2	-50.0	24.5
	116	-247.8	204.6	-93.3	15.2	-83.4	-138.9
16	115	-288.7	-0.8	86.3	0.2	-142.2	-0.3
	116	288.7	0.8	-166.4	-0.2	-174.1	-1.4
17	115	33.0	-2.5	50.4	-0.5	-96.9	-2.4
	116	-33.0	2.5	-130.5	0.5	-129.5	-4.0

Comb.	Nodo	N [kg]	T1-2 [kg]	T1-3 [kg]	Mt [kgm]	M1-3 [kgm]	M1-2 [kgm]
1	118	337.5	68.9	118.5	6.5	-88.8	42.8
	119	-337.5	35.3	55.0	-6.5	9.4	-0.8
2	118	195.9	68.0	197.2	11.5	-147.1	41.7
	119	-195.9	36.2	91.9	-11.5	15.3	-2.0
3	118	423.4	72.5	118.8	6.4	-89.4	47.3
	119	-423.4	31.6	54.7	-6.4	9.2	3.8
4	118	-337.7	105.0	1.7	-0.7	-3.5	87.1
	119	337.7	-0.9	-1.7	0.7	-0.6	45.5
5	118	679.4	27.0	0.1	-0.2	-0.4	0.9
	119	-679.4	53.1	-0.1	0.2	0.1	-33.6
6	118	114.9	49.1	2.1	0.6	-4.0	28.0
	119	-114.9	31.0	-2.1	-0.6	-1.3	-5.4
7	118	244.2	51.9	79.0	4.3	-59.2	31.5
	119	-244.2	28.2	36.7	-4.3	6.2	-2.0
8	118	149.9	51.3	131.5	7.6	-98.1	30.8
	119	-149.9	28.8	61.3	-7.6	10.2	-2.7
9	118	301.5	54.3	79.2	4.3	-59.6	34.6
	119	-301.5	25.8	36.5	-4.3	6.1	1.1
10	118	-205.9	76.0	1.1	-0.5	-2.4	61.1
	119	205.9	4.1	-1.1	0.5	-0.4	28.9
11	118	395.7	53.8	0.4	-0.6	-1.2	33.9
	119	-395.7	26.3	-0.4	0.6	0.1	0.5
12	118	353.8	53.6	26.7	1.1	-20.7	33.7
	119	-353.8	26.5	11.9	-1.1	2.1	0.3
13	118	243.0	48.0	0.1	-0.3	-0.4	26.7
	119	-243.0	32.1	-0.1	0.3	0.1	-6.7
14	118	282.6	58.6	0.6	-0.6	-1.5	39.7
	119	-282.6	21.5	-0.6	0.6	-0.0	6.6
15	118	92.6	48.8	131.3	7.7	-97.7	27.8
	119	-92.6	31.3	61.5	-7.7	10.3	-5.8
16	118	717.3	25.3	0.1	-0.2	-0.4	-1.2
	119	-717.3	54.8	-0.1	0.2	0.1	-35.7
17	118	106.6	49.2	2.2	0.7	-4.3	28.2
	119	-106.6	30.9	-2.2	-0.7	-1.4	-5.2
1	119	367.5	40.1	75.3	1.6	-9.9	23.3
	120	-367.5	24.9	97.9	-1.6	38.2	-4.2
2	119	203.2	38.8	125.7	3.0	-16.2	21.7
	120	-203.2	26.2	163.1	-3.0	62.9	-5.9
3	119	477.8	43.5	75.1	1.5	-9.8	27.6
	120	-477.8	21.5	98.1	-1.5	38.5	0.0
4	119	2.5	103.2	-0.6	-0.5	0.6	101.7
	120	-2.5	-38.2	0.6	0.5	0.8	75.0
5	119	524.2	-16.5	-0.0	0.4	-0.2	-41.1
	120	-524.2	66.5	0.0	-0.4	0.2	-62.6
6	119	132.7	-0.1	-0.4	0.9	1.2	-20.8

Comb.	Nodo	N [kg]	T1-2 [kg]	T1-3 [kg]	Mt [kgm]	M1-3 [kgm]	M1-2 [kgm]
	120	-132.7	50.1	0.4	-0.9	-0.2	-42.0
7	119	264.2	30.2	50.2	1.1	-6.6	17.0
	120	-264.2	19.8	65.3	-1.1	25.5	-4.1
8	119	154.7	29.3	83.8	2.0	-10.8	15.9
	120	-154.7	20.7	108.7	-2.0	42.0	-5.3
9	119	337.7	32.4	50.1	1.0	-6.5	19.9
	120	-337.7	17.6	65.4	-1.0	25.7	-1.3
10	119	20.9	72.2	-0.4	-0.3	0.4	69.3
	120	-20.9	-22.2	0.4	0.3	0.6	48.7
11	119	447.7	32.8	-0.3	-0.3	-0.1	20.3
	120	-447.7	17.2	0.3	0.3	0.9	-0.7
12	119	399.0	32.5	16.5	0.1	-2.2	19.9
	120	-399.0	17.5	22.0	-0.1	9.1	-1.2
13	119	260.1	28.0	-0.1	-0.1	-0.1	14.3
	120	-260.1	22.0	0.1	0.1	0.4	-6.8
14	119	372.3	41.1	-0.3	-0.3	0.0	30.6
	120	-372.3	8.9	0.3	0.3	0.9	9.6
15	119	81.1	27.0	83.9	2.0	-10.9	13.1
	120	-81.1	23.0	108.6	-2.0	41.7	-8.1
16	119	548.7	-20.1	-0.0	0.5	-0.2	-45.6
	120	-548.7	70.1	0.0	-0.5	0.2	-67.1
17	119	125.0	-2.4	-0.5	0.9	1.3	-23.6
	120	-125.0	52.4	0.5	-0.9	-0.3	-44.8
1	120	276.9	7.6	97.1	-1.2	-38.2	-17.4
	121	-276.9	57.2	75.7	1.2	11.6	-44.5
2	120	107.0	10.0	161.6	-2.2	-63.0	-14.4
	121	-107.0	54.9	126.4	2.2	19.1	-41.6
3	120	386.4	3.9	97.2	-1.1	-38.5	-22.0
	121	-386.4	60.9	75.6	1.1	11.7	-49.1
4	120	429.7	73.7	-0.3	0.1	-0.9	65.4
	121	-429.7	-8.9	0.3	-0.1	1.6	37.6
5	120	208.5	-30.7	0.4	0.7	-0.2	-59.3
	121	-208.5	80.6	-0.4	-0.7	-0.9	-79.5
6	120	106.2	-14.2	0.4	1.0	0.2	-38.6
	121	-106.2	64.1	-0.4	-1.0	-1.1	-59.0
7	120	198.9	7.3	64.7	-0.8	-25.5	-11.6
	121	-198.9	42.6	50.5	0.8	7.8	-32.5
8	120	85.7	8.8	107.7	-1.5	-42.0	-9.6
	121	-85.7	41.0	84.3	1.5	12.7	-30.5
9	120	271.9	4.8	64.8	-0.7	-25.7	-14.7
	121	-271.9	45.1	50.4	0.7	7.8	-35.5
10	120	300.8	51.3	-0.2	0.1	-0.6	43.6
	121	-300.8	-1.5	0.2	-0.1	1.1	22.3
11	120	393.3	4.8	0.2	0.3	-0.9	-14.8
	121	-393.3	45.1	-0.2	-0.3	0.4	-35.5
12	120	342.1	5.3	21.7	-0.0	-9.2	-14.1

Comb.	Nodo	N [kg]	T1-2 [kg]	T1-3 [kg]	Mt [kgm]	M1-3 [kgm]	M1-2 [kgm]
	121	-342.1	44.6	16.7	0.0	2.9	-34.9
13	120	214.1	11.7	0.1	0.2	-0.4	-6.1
	121	-214.1	38.2	-0.1	-0.2	0.3	-26.9
14	120	385.1	13.8	0.1	0.3	-0.9	-3.4
	121	-385.1	36.1	-0.1	-0.3	0.5	-24.3
15	120	12.7	11.3	107.7	-1.5	-41.8	-6.6
	121	-12.7	38.6	84.3	1.5	12.7	-27.4
16	120	210.3	-34.4	0.4	0.7	-0.2	-63.9
	121	-210.3	84.2	-0.4	-0.7	-1.0	-84.0
17	120	99.0	-16.5	0.4	1.1	0.3	-41.4
	121	-99.0	66.3	-0.4	-1.1	-1.2	-61.8
1	121	114.4	26.5	59.5	-6.2	-11.2	-10.6
	122	-114.4	77.7	114.0	6.2	79.4	-53.5
2	121	-40.5	29.1	98.7	-10.7	-18.5	-7.2
	122	40.5	75.0	190.4	10.7	133.2	-50.2
3	121	200.2	21.8	59.7	-6.1	-11.3	-16.4
	122	-200.2	82.3	113.8	6.1	79.0	-59.3
4	121	591.3	68.1	2.8	0.3	-1.6	42.4
	122	-591.3	36.1	-2.8	-0.3	-5.5	-2.4
5	121	-56.6	1.2	-1.3	0.3	0.9	-32.7
	122	56.6	78.9	1.3	-0.3	2.4	-64.4
6	121	8.1	11.2	-1.1	-0.3	1.1	-19.9
	122	-8.1	68.9	1.1	0.3	1.7	-52.2
7	121	83.0	21.9	39.7	-4.1	-7.5	-6.2
	122	-83.0	58.2	76.0	4.1	52.9	-39.3
8	121	-20.3	23.6	65.9	-7.1	-12.3	-4.0
	122	20.3	56.5	126.9	7.1	88.8	-37.1
9	121	140.2	18.8	39.8	-4.1	-7.6	-10.1
	122	-140.2	61.3	75.8	4.1	52.7	-43.1
10	121	400.9	49.6	1.9	0.2	-1.1	29.1
	122	-400.9	30.5	-1.9	-0.2	-3.7	-5.2
11	121	261.5	18.6	0.6	0.4	-0.3	-10.4
	122	-261.5	61.5	-0.6	-0.4	-1.0	-43.3
12	121	213.6	19.2	13.6	-1.1	-2.8	-9.6
	122	-213.6	60.9	24.9	1.1	16.9	-42.6
13	121	126.8	26.7	0.3	0.3	-0.2	-0.2
	122	-126.8	53.4	-0.3	-0.3	-0.5	-33.3
14	121	297.9	24.4	0.8	0.4	-0.5	-3.0
	122	-297.9	55.7	-0.8	-0.4	-1.6	-36.2
15	121	-77.5	26.7	65.7	-7.2	-12.3	-0.1
	122	77.5	53.4	127.0	7.2	89.0	-33.3
16	121	-69.5	-1.0	-1.4	0.3	1.0	-35.6
	122	69.5	81.1	1.4	-0.3	2.7	-67.2
17	121	-1.4	9.8	-1.2	-0.3	1.3	-21.8
	122	1.4	70.3	1.2	0.3	2.0	-53.9

Comb.	Nodo	N [kg]	T1-2 [kg]	T1-3 [kg]	Mt [kgm]	M1-3 [kgm]	M1-2 [kgm]
1	122	-409.6	53.0	124.0	3.8	-83.4	22.9
	123	409.6	51.0	49.3	-3.8	-9.9	-20.3
2	122	-440.6	54.3	206.4	6.4	-139.2	24.5
	123	440.6	49.7	82.3	-6.4	-15.9	-18.8
3	122	-470.7	52.0	123.9	3.8	-83.3	21.6
	123	470.7	52.0	49.3	-3.8	-10.0	-21.6
4	122	285.7	94.0	1.4	-0.4	-3.1	73.8
	123	-285.7	10.0	-1.4	0.4	-0.3	31.1
5	122	-495.8	19.8	0.3	0.5	0.3	-8.5
	123	495.8	60.2	-0.3	-0.5	-2.1	-42.1
6	122	-311.8	44.5	2.8	0.8	-3.9	22.3
	123	311.8	35.5	-2.8	-0.8	-3.4	-11.0
7	122	-284.1	41.0	82.7	2.5	-55.6	17.9
	123	284.1	39.0	32.8	-2.5	-6.6	-15.4
8	122	-304.7	41.8	137.6	4.2	-92.8	18.9
	123	304.7	38.2	54.9	-4.2	-10.6	-14.4
9	122	-324.7	40.3	82.6	2.5	-55.5	17.0
	123	324.7	39.7	32.9	-2.5	-6.7	-16.2
10	122	179.5	68.3	0.9	-0.2	-2.0	51.8
	123	-179.5	11.7	-0.9	0.2	-0.3	18.9
11	122	-260.3	39.6	0.2	-0.0	0.3	16.1
	123	260.3	40.4	-0.2	0.0	-0.7	-17.2
12	122	-274.4	39.9	27.6	0.8	-18.3	16.5
	123	274.4	40.1	10.9	-0.8	-2.7	-16.7
13	122	-152.1	41.3	0.1	-0.0	0.2	18.3
	123	152.1	38.7	-0.1	0.0	-0.5	-15.0
14	122	-177.5	45.2	0.3	-0.1	-0.2	23.1
	123	177.5	34.8	-0.3	0.1	-0.6	-10.1
15	122	-264.0	42.5	137.6	4.2	-92.9	19.8
	123	264.0	37.5	54.9	-4.2	-10.6	-13.5
16	122	-525.6	17.9	0.4	0.5	0.3	-10.8
	123	525.6	62.1	-0.4	-0.5	-2.2	-44.4
17	122	-326.9	44.7	3.0	0.8	-4.2	22.6
	123	326.9	35.3	-3.0	-0.8	-3.6	-10.7
1	123	-386.5	53.4	52.1	-4.6	9.9	23.4
	124	386.5	50.6	121.1	4.6	76.4	-20.0
2	123	-402.3	54.2	87.8	-7.7	15.8	24.5
	124	402.3	49.8	201.0	7.7	125.7	-18.9
3	123	-450.0	52.8	52.0	-4.6	9.9	22.6
	124	450.0	51.2	121.3	4.6	76.7	-20.7
4	123	338.1	91.3	0.5	-0.3	0.4	71.1
	124	-338.1	12.7	-0.5	0.3	-1.6	27.2
5	123	-519.1	20.9	-1.8	0.5	2.1	-7.3
	124	519.1	59.1	1.8	-0.5	2.5	-40.4
6	123	-320.9	43.7	-1.5	0.7	3.4	21.4
	124	320.9	36.3	1.5	-0.7	-0.6	-12.1

Comb.	Nodo	N [kg]	T1-2 [kg]	T1-3 [kg]	Mt [kgm]	M1-3 [kgm]	M1-2 [kgm]
7	123	-267.8	41.2	34.6	-3.0	6.6	18.1
	124	267.8	38.9	80.9	3.0	51.1	-15.2
8	123	-278.4	41.7	58.4	-5.1	10.6	18.8
	124	278.4	38.3	134.1	5.1	83.9	-14.5
9	123	-310.1	40.7	34.6	-3.0	6.7	17.6
	124	310.1	39.3	80.9	3.0	51.3	-15.8
10	123	215.3	66.4	0.2	-0.2	0.3	49.9
	124	-215.3	13.6	-0.2	0.2	-0.9	16.2
11	123	-260.0	40.1	-1.1	0.1	0.7	16.9
	124	260.0	39.9	1.1	-0.1	1.9	-16.5
12	123	-269.1	40.4	10.8	-1.0	2.7	17.2
	124	269.1	39.6	27.7	1.0	18.4	-16.2
13	123	-148.0	41.1	-0.8	0.1	0.5	18.1
	124	148.0	38.9	0.8	-0.1	1.5	-15.3
14	123	-170.3	45.3	-0.8	0.0	0.6	23.4
	124	170.3	34.7	0.8	-0.0	1.4	-10.0
15	123	-236.0	42.1	58.5	-5.1	10.5	19.4
	124	236.0	37.9	134.0	5.1	83.8	-14.0
16	123	-551.3	19.2	-1.9	0.6	2.2	-9.5
	124	551.3	60.8	1.9	-0.6	2.6	-42.5
17	123	-337.1	43.9	-1.5	0.7	3.6	21.6
	124	337.1	36.1	1.5	-0.7	-0.7	-11.8
1	132	152.4	233.4	-46.7	3.7	11.6	212.5
	146	-152.4	81.0	-67.7	-3.7	-40.6	-2.9
2	132	335.5	388.6	-47.4	6.1	12.6	353.4
	146	-335.5	135.3	-67.0	-6.1	-39.6	-5.2
3	132	123.1	233.2	-51.5	3.6	18.4	212.2
	146	-123.1	81.1	-62.9	-3.6	-33.9	-3.0
4	132	-447.9	-5.9	-122.7	0.4	116.2	-18.1
	146	447.9	5.9	8.3	-0.4	63.8	1.8
5	132	26.1	1.7	11.6	0.5	-56.6	3.6
	146	-26.1	-1.7	-99.6	-0.5	-96.1	0.3
6	132	27.3	3.2	-35.2	0.8	8.0	6.3
	146	-27.3	-3.2	-52.8	-0.8	-32.1	2.5
7	132	96.3	155.6	-36.0	2.5	9.1	141.7
	146	-96.3	53.9	-52.0	-2.5	-31.1	-2.0
8	132	218.4	259.1	-36.5	4.1	9.7	235.7
	146	-218.4	90.2	-51.5	-4.1	-30.4	-3.5
9	132	76.8	155.5	-39.3	2.4	13.6	141.5
	146	-76.8	54.0	-48.7	-2.4	-26.6	-2.0
10	132	-303.9	-3.9	-86.7	0.3	78.8	-12.0
	146	303.9	3.9	-1.3	-0.3	38.5	1.2
11	132	-99.3	0.2	-39.7	0.0	14.2	0.5
	146	99.3	-0.2	-48.3	-0.0	-26.0	0.1
12	132	-39.0	52.0	-39.8	0.8	14.4	47.5
	146	39.0	17.9	-48.2	-0.8	-25.9	-0.6

Comb.	Nodo	N [kg]	T1-2 [kg]	T1-3 [kg]	Mt [kgm]	M1-3 [kgm]	M1-2 [kgm]
13	132	-58.8	0.3	-36.1	0.1	9.2	0.7
	146	58.8	-0.3	-51.9	-0.1	-31.0	0.1
14	132	-143.5	-0.6	-49.9	0.1	28.2	-2.1
	146	143.5	0.6	-38.1	-0.1	-12.1	0.3
15	132	237.9	259.2	-33.2	4.2	5.2	235.9
	146	-237.9	90.1	-54.8	-4.2	-34.9	-3.4
16	132	-95.6	1.8	15.4	0.5	-61.9	3.9
	146	95.6	-1.8	-103.4	-0.5	-101.4	0.3
17	132	-3.7	3.5	-35.3	0.9	8.0	6.8
	146	3.7	-3.5	-52.7	-0.9	-32.1	2.8
1	146	145.1	134.5	-44.9	1.8	29.0	5.5
	147	-145.1	179.8	-26.6	-1.8	-3.8	-67.8
2	146	333.9	224.7	-41.7	2.9	24.6	9.5
	147	-333.9	299.2	-29.8	-2.9	-8.2	-111.9
3	146	134.5	134.4	-49.7	1.7	35.6	5.6
	147	-134.5	179.9	-21.8	-1.7	2.8	-68.2
4	146	-355.6	-1.9	-140.4	-0.6	159.9	-1.8
	147	355.6	1.9	68.9	0.6	128.0	-3.3
5	146	-102.9	-0.2	36.9	0.7	-76.0	-0.3
	147	102.9	0.2	-91.9	-0.7	-101.2	0.1
6	146	-25.5	-0.9	6.7	1.1	-34.4	-2.4
	147	25.5	0.9	-61.7	-1.1	-59.7	0.4
7	146	88.0	89.7	-33.6	1.2	21.1	3.7
	147	-88.0	119.9	-21.4	-1.2	-4.2	-45.2
8	146	213.9	149.8	-31.5	1.9	18.1	6.3
	147	-213.9	199.5	-23.5	-1.9	-7.1	-74.6
9	146	81.0	89.6	-36.9	1.2	25.5	3.7
	147	-81.0	120.0	-18.1	-1.2	0.3	-45.5
10	146	-245.7	-1.2	-97.3	-0.3	108.4	-1.2
	147	245.7	1.2	42.3	0.3	83.7	-2.2
11	146	-100.5	-0.5	-38.6	0.1	27.8	-0.1
	147	100.5	0.5	-16.4	-0.1	2.6	-1.2
12	146	-38.4	29.6	-37.7	0.4	26.6	1.2
	147	38.4	40.3	-17.3	-0.4	1.4	-15.9
13	146	-79.7	-0.2	-31.5	0.2	18.2	-0.1
	147	79.7	0.2	-23.5	-0.2	-7.1	-0.5
14	146	-130.3	-0.6	-50.8	-0.0	44.6	-0.3
	147	130.3	0.6	-4.2	0.0	19.5	-1.5
15	146	221.0	149.9	-28.3	2.0	13.7	6.3
	147	-221.0	199.4	-26.7	-2.0	-11.5	-74.3
16	146	-108.1	-0.2	42.5	0.8	-83.6	-0.3
	147	108.1	0.2	-97.5	-0.8	-108.8	0.1
17	146	-21.4	-1.0	9.8	1.2	-38.6	-2.7
	147	21.4	1.0	-64.8	-1.2	-63.9	0.5
1	147	140.2	182.2	-50.1	1.6	36.2	67.8

Comb.	Nodo	N [kg]	T1-2 [kg]	T1-3 [kg]	Mt [kgm]	M1-3 [kgm]	M1-2 [kgm]
	148	-140.2	132.5	-21.5	-1.6	3.1	0.7
2	147	335.1	303.3	-45.5	2.2	29.9	111.8
	148	-335.1	221.2	-26.1	-2.2	-3.2	1.1
3	147	127.4	182.4	-45.1	1.7	29.4	68.2
	148	-127.4	132.3	-26.5	-1.7	-3.7	0.7
4	147	-303.4	0.8	-149.4	0.2	172.3	3.3
	148	303.4	-0.8	77.8	-0.2	140.4	-1.0
5	147	-117.3	0.8	21.4	0.8	-54.5	-0.1
	148	117.3	-0.8	-76.5	-0.8	-80.2	2.1
6	147	-29.5	1.5	-8.9	1.2	-12.9	-0.5
	148	29.5	-1.5	-46.2	-1.2	-38.6	4.2
7	147	83.9	121.5	-39.3	1.1	29.0	45.2
	148	-83.9	88.3	-15.8	-1.1	3.4	0.5
8	147	213.9	202.2	-36.3	1.5	24.7	74.6
	148	-213.9	147.5	-18.8	-1.5	-0.7	0.7
9	147	75.4	121.6	-36.0	1.1	24.4	45.5
	148	-75.4	88.2	-19.1	-1.1	-1.1	0.5
10	147	-211.8	0.6	-105.5	0.1	119.7	2.2
	148	211.8	-0.6	50.4	-0.1	95.0	-0.7
11	147	-111.5	0.4	-39.9	0.5	29.7	1.2
	148	111.5	-0.4	-15.2	-0.5	4.2	0.0
12	147	-47.4	40.8	-38.4	0.7	27.7	15.9
	148	47.4	29.1	-16.6	-0.7	2.2	0.2
13	147	-87.6	0.2	-44.2	0.3	35.8	0.5
	148	87.6	-0.2	-10.8	-0.3	10.2	-0.0
14	147	-132.5	0.5	-52.3	0.4	46.7	1.5
	148	132.5	-0.5	-2.8	-0.4	21.4	-0.1
15	147	222.4	202.1	-39.6	1.4	29.3	74.3
	148	-222.4	147.6	-15.5	-1.4	3.8	0.8
16	147	-121.5	0.8	26.9	0.8	-62.1	-0.1
	148	121.5	-0.8	-82.0	-0.8	-87.9	2.2
17	147	-24.9	1.6	-5.8	1.3	-17.1	-0.5
	148	24.9	-1.6	-49.3	-1.3	-42.8	4.5
1	148	214.4	77.5	-121.6	-1.1	114.4	-3.5
	133	-214.4	236.5	7.4	1.1	62.8	-214.8
2	148	396.2	127.5	-112.2	-1.9	101.5	-5.9
	133	-396.2	395.8	-2.1	1.9	49.8	-362.6
3	148	178.6	77.8	-118.5	-1.0	110.1	-3.5
	133	-178.6	236.2	4.2	1.0	58.4	-214.1
4	148	-164.3	2.7	-208.1	0.0	232.1	1.1
	133	164.3	-2.7	93.9	-0.0	182.7	6.3
5	148	-59.6	-0.8	-33.8	0.5	6.3	-2.1
	133	59.6	0.8	-54.1	-0.5	-34.3	-0.1
6	148	43.2	-2.8	-60.0	1.0	42.2	-4.3
	133	-43.2	2.8	-27.9	-1.0	2.0	-3.5
7	148	143.4	51.8	-92.5	-0.7	86.6	-2.3

Comb.	Nodo	N [kg]	T1-2 [kg]	T1-3 [kg]	Mt [kgm]	M1-3 [kgm]	M1-2 [kgm]
	133	-143.4	157.5	4.6	0.7	46.8	-142.9
8	148	264.6	85.1	-86.2	-1.2	78.0	-3.9
	133	-264.6	263.7	-1.7	1.2	38.2	-241.4
9	148	119.5	52.0	-90.4	-0.7	83.7	-2.3
	133	-119.5	157.3	2.5	0.7	43.9	-142.4
10	148	-109.1	1.9	-150.2	0.0	165.0	0.7
	133	109.1	-1.9	62.3	-0.0	126.8	4.5
11	148	-57.6	1.8	-95.1	0.1	90.1	0.0
	133	57.6	-1.8	7.2	-0.1	50.4	4.9
12	148	2.5	18.5	-92.5	-0.2	86.6	-0.7
	133	-2.5	51.3	4.6	0.2	46.8	-44.3
13	148	-13.4	1.3	-92.4	0.0	86.4	0.1
	133	13.4	-1.3	4.5	-0.0	46.7	3.6
14	148	-72.3	1.9	-105.3	0.1	104.0	0.2
	133	72.3	-1.9	17.4	-0.1	64.5	4.9
15	148	288.5	84.9	-88.3	-1.3	80.8	-3.9
	133	-288.5	263.9	0.4	1.3	41.1	-241.9
16	148	-64.6	-0.9	-28.9	0.6	-0.3	-2.3
	133	64.6	0.9	-59.0	-0.6	-41.0	-0.4
17	148	47.6	-3.2	-57.4	1.1	38.5	-4.6
	133	-47.6	3.2	-30.5	-1.1	-1.7	-4.1
1	133	90.3	199.8	-151.0	8.5	146.4	152.9
	134	-90.3	86.3	46.9	-8.5	101.3	-10.8
2	133	287.4	333.7	-136.5	14.4	128.1	255.7
	134	-287.4	143.2	32.4	-14.4	83.4	-17.2
3	133	63.5	199.9	-169.5	8.3	169.6	152.8
	134	-63.5	86.2	65.3	-8.3	124.2	-10.6
4	133	-333.2	-1.9	-247.9	-0.3	268.0	-3.7
	134	333.2	1.9	143.8	0.3	222.2	-1.1
5	133	-107.0	1.3	-24.0	-0.0	-3.1	2.9
	134	107.0	-1.3	-56.1	0.0	-37.0	-0.6
6	133	-38.5	3.3	-53.7	0.8	34.2	6.2
	134	38.5	-3.3	-26.4	-0.8	0.1	1.8
7	133	48.7	133.1	-111.1	5.7	106.2	101.8
	134	-48.7	57.6	31.0	-5.7	71.6	-7.3
8	133	180.1	222.4	-101.4	9.6	94.0	170.4
	134	-180.1	95.5	21.3	-9.6	59.6	-11.6
9	133	30.8	133.2	-123.4	5.5	121.7	101.8
	134	-30.8	57.6	43.2	-5.5	86.8	-7.2
10	133	-233.6	-1.3	-175.7	-0.2	187.3	-2.5
	134	233.6	1.3	95.6	0.2	152.2	-0.8
11	133	-154.9	-0.7	-128.7	-0.3	128.5	-0.9
	134	154.9	0.7	48.6	0.3	93.5	-0.7
12	133	-90.4	44.0	-124.9	1.6	123.7	33.3
	134	90.4	19.6	44.8	-1.6	88.7	-2.9
13	133	-111.5	-0.7	-97.3	-0.1	88.9	-0.8

Comb.	Nodo	N [kg]	T1-2 [kg]	T1-3 [kg]	Mt [kgm]	M1-3 [kgm]	M1-2 [kgm]
	134	111.5	0.7	17.2	0.1	54.5	-0.9
14	133	-173.2	-0.8	-139.8	-0.3	142.3	-1.2
	134	173.2	0.8	59.7	0.3	107.3	-0.7
15	133	198.0	222.4	-89.1	9.7	78.5	170.4
	134	-198.0	95.6	9.0	-9.7	44.4	-11.7
16	133	-108.1	1.5	-18.6	-0.0	-9.9	3.3
	134	108.1	-1.5	-61.5	0.0	-43.8	-0.6
17	133	-31.8	3.6	-50.7	0.9	30.3	6.8
	134	31.8	-3.6	-29.4	-0.9	-3.7	2.1
1	135	244.7	-162.9	39.7	1.9	-77.1	-63.5
	134	-244.7	-122.8	-104.7	-1.9	-103.3	13.3
2	135	419.9	-271.3	27.3	3.7	-61.8	-104.4
	134	-419.9	-205.0	-92.3	-3.7	-87.9	21.5
3	135	254.0	-163.2	56.1	1.8	-97.7	-63.9
	134	-254.0	-122.6	-121.1	-1.8	-123.7	13.1
4	135	-149.4	-0.2	169.9	-0.9	-239.9	-1.5
	134	149.4	0.2	-234.9	0.9	-266.1	1.0
5	135	-34.9	-0.4	-76.7	0.5	75.0	-0.5
	134	34.9	0.4	26.7	-0.5	54.3	0.6
6	135	27.9	-0.9	-37.0	0.9	25.3	-0.1
	134	-27.9	0.9	-13.0	-0.9	4.7	-1.7
7	135	158.1	-108.6	26.7	1.3	-54.5	-42.4
	134	-158.1	-81.9	-76.7	-1.3	-74.7	9.0
8	135	274.9	-180.8	18.5	2.4	-44.3	-69.7
	134	-274.9	-136.7	-68.5	-2.4	-64.4	14.5
9	135	164.3	-108.8	37.6	1.2	-68.2	-42.6
	134	-164.3	-81.7	-87.6	-1.2	-88.3	8.9
10	135	-104.6	-0.1	113.5	-0.6	-163.0	-1.0
	134	104.6	0.1	-163.5	0.6	-183.3	0.8
11	135	-14.6	-0.3	43.2	-0.5	-75.1	-1.5
	134	14.6	0.3	-93.2	0.5	-95.3	0.7
12	135	44.2	-36.5	39.8	0.1	-70.9	-15.2
	134	-44.2	-27.0	-89.8	-0.1	-91.1	3.4
13	135	-29.3	0.0	17.0	-0.3	-42.2	-0.8
	134	29.3	-0.0	-67.0	0.3	-62.7	0.9
14	135	-31.7	-0.3	58.8	-0.5	-94.7	-1.4
	134	31.7	0.3	-108.8	0.5	-114.9	0.7
15	135	268.7	-180.7	7.5	2.5	-30.5	-69.4
	134	-268.7	-136.8	-57.5	-2.5	-50.8	14.6
16	135	-35.3	-0.4	-84.0	0.5	84.1	-0.5
	134	35.3	0.4	34.0	-0.5	63.4	0.6
17	135	34.4	-1.0	-41.1	1.0	30.3	-0.1
	134	-34.4	1.0	-8.9	-1.0	9.8	-2.0
1	136	253.1	-122.7	-97.6	-2.0	94.3	-14.0
	135	-253.1	-162.3	32.8	2.0	68.2	63.4

Comb.	Nodo	N [kg]	T1-2 [kg]	T1-3 [kg]	Mt [kgm]	M1-3 [kgm]	M1-2 [kgm]
2	136	424.0	-205.0	-91.7	-3.6	86.9	-23.3
	135	-424.0	-270.0	26.9	3.6	60.9	104.4
3	136	264.9	-122.5	-111.3	-2.0	111.2	-14.0
	135	-264.9	-162.5	46.4	2.0	85.4	63.9
4	136	-53.2	0.6	41.9	-0.0	-79.5	-0.0
	135	53.2	-0.6	-106.7	0.0	-105.7	1.5
5	136	-56.1	0.8	-135.7	0.8	148.3	1.5
	135	56.1	-0.8	85.8	-0.8	127.9	0.5
6	136	26.5	1.3	-95.4	1.1	98.1	2.9
	135	-26.5	-1.3	45.6	-1.1	77.7	0.1
7	136	165.1	-81.7	-70.1	-1.3	66.3	-9.3
	135	-165.1	-108.2	20.2	1.3	46.2	42.3
8	136	279.0	-136.6	-66.1	-2.4	61.4	-15.5
	135	-279.0	-180.0	16.3	2.4	41.3	69.7
9	136	173.0	-81.6	-79.2	-1.3	77.6	-9.3
	135	-173.0	-108.4	29.3	1.3	57.7	42.6
10	136	-39.1	0.4	22.9	-0.0	-49.5	0.0
	135	39.1	-0.4	-72.8	0.0	-69.8	1.0
11	136	-1.5	0.6	-77.6	0.3	75.6	0.1
	135	1.5	-0.6	27.7	-0.3	55.6	1.5
12	136	55.9	-26.8	-76.4	-0.2	74.2	-3.0
	135	-55.9	-36.5	26.6	0.2	54.2	15.1
13	136	-18.6	0.3	-53.3	0.2	45.5	0.1
	135	18.6	-0.3	3.4	-0.2	25.1	0.8
14	136	-7.7	0.6	-58.6	0.2	52.0	0.1
	135	7.7	-0.6	8.7	-0.2	31.9	1.4
15	136	271.2	-136.7	-57.0	-2.5	50.1	-15.5
	135	-271.2	-179.9	7.1	2.5	29.9	69.4
16	136	-58.3	0.9	-143.0	0.8	157.5	1.6
	135	58.3	-0.9	93.2	-0.8	137.0	0.5
17	136	32.2	1.4	-99.4	1.2	103.1	3.2
	135	-32.2	-1.4	49.6	-1.2	82.7	0.1
1	136	120.7	89.2	49.5	-8.5	-104.5	11.5
	137	-120.7	196.9	-153.6	8.5	-149.7	-146.3
2	136	302.6	149.1	37.6	-14.5	-89.8	19.2
	137	-302.6	327.8	-141.7	14.5	-134.6	-242.9
3	136	101.4	89.2	67.3	-8.4	-126.6	11.5
	137	-101.4	197.0	-171.4	8.4	-172.1	-146.4
4	136	-130.0	-1.4	-55.0	0.4	25.8	0.0
	137	130.0	1.4	-49.2	-0.4	-18.6	-3.4
5	136	-115.7	-0.8	64.3	0.2	-113.3	-1.5
	137	115.7	0.8	-144.4	-0.2	-148.0	-1.4
6	136	-25.4	-2.8	9.2	-0.3	-44.5	-3.0
	137	25.4	2.8	-89.3	0.3	-78.9	-4.4
7	136	73.7	59.4	32.4	-5.6	-73.4	7.7
	137	-73.7	131.3	-112.5	5.6	-108.1	-97.7

Comb.	Nodo	N [kg]	T1-2 [kg]	T1-3 [kg]	Mt [kgm]	M1-3 [kgm]	M1-2 [kgm]
8	136	195.0	99.3	24.5	-9.7	-63.6	12.8
	137	-195.0	218.6	-104.6	9.7	-98.0	-162.0
9	136	60.8	59.4	44.3	-5.6	-88.1	7.6
	137	-60.8	131.4	-124.4	5.6	-123.0	-97.8
10	136	-93.4	-1.0	-37.2	0.3	13.5	-0.0
	137	93.4	1.0	-42.9	-0.3	-20.7	-2.4
11	136	-109.6	-0.5	46.8	0.4	-91.2	-0.1
	137	109.6	0.5	-126.9	-0.4	-126.2	-1.2
12	136	-50.2	19.4	43.9	-1.6	-87.5	2.5
	137	50.2	44.1	-124.0	1.6	-122.5	-33.4
13	136	-74.3	-0.5	15.7	0.3	-52.5	-0.1
	137	74.3	0.5	-95.8	-0.3	-87.0	-1.1
14	136	-107.9	-0.6	31.5	0.4	-72.1	-0.1
	137	107.9	0.6	-111.6	-0.4	-107.1	-1.5
15	136	207.8	99.4	12.6	-9.7	-48.8	12.8
	137	-207.8	218.6	-92.7	9.7	-83.0	-162.0
16	136	-119.2	-0.8	68.9	0.2	-119.0	-1.7
	137	119.2	0.8	-149.0	-0.2	-153.8	-1.5
17	136	-20.5	-3.1	9.2	-0.4	-44.5	-3.3
	137	20.5	3.1	-89.4	0.4	-78.9	-4.8
1	139	174.6	53.3	88.9	5.1	-92.0	36.9
	140	-174.6	18.3	-2.1	-5.1	-21.9	7.0
2	139	-61.3	52.7	148.6	9.2	-153.7	36.3
	140	61.3	18.9	-4.0	-9.2	-37.4	6.1
3	139	289.3	57.2	89.3	5.0	-92.7	41.6
	140	-289.3	14.4	-2.5	-5.0	-22.2	11.9
4	139	254.4	89.7	1.1	-0.7	-2.4	81.9
	140	-254.4	-18.1	-1.1	0.7	-0.2	53.1
5	139	234.3	14.4	-0.2	-0.2	0.1	-4.6
	140	-234.3	40.6	0.2	0.2	0.5	-28.2
6	139	65.6	36.4	2.0	0.5	-3.9	22.6
	140	-65.6	18.7	-2.0	-0.5	-1.2	-0.4
7	139	129.0	39.8	59.2	3.4	-61.3	26.9
	140	-129.0	15.2	-1.4	-3.4	-14.6	3.9
8	139	-28.3	39.4	99.1	6.1	-102.4	26.5
	140	28.3	15.6	-2.7	-6.1	-24.9	3.3
9	139	205.5	42.4	59.5	3.3	-61.7	30.1
	140	-205.5	12.7	-1.6	-3.3	-14.8	7.1
10	139	182.2	64.1	0.7	-0.5	-1.6	56.9
	140	-182.2	-9.0	-0.7	0.5	-0.1	34.6
11	139	391.5	41.5	-0.1	-0.6	-0.2	28.8
	140	-391.5	13.5	0.1	0.6	0.5	6.2
12	139	318.4	41.5	19.8	0.7	-20.7	28.8
	140	-318.4	13.6	-0.5	-0.7	-4.6	6.1
13	139	204.9	35.5	-0.3	-0.3	0.4	21.5
	140	-204.9	19.5	0.3	0.3	0.5	-1.5

Comb.	Nodo	N [kg]	T1-2 [kg]	T1-3 [kg]	Mt [kgm]	M1-3 [kgm]	M1-2 [kgm]
14	139	360.5	46.4	0.1	-0.6	-0.6	34.9
	140	-360.5	8.6	-0.1	0.6	0.3	12.4
15	139	-104.8	36.9	98.8	6.2	-101.9	23.3
	140	104.8	18.2	-2.4	-6.2	-24.8	-0.0
16	139	239.2	12.7	-0.2	-0.2	0.1	-6.7
	140	-239.2	42.3	0.2	0.2	0.5	-30.3
17	139	54.8	36.6	2.2	0.5	-4.2	22.8
	140	-54.8	18.5	-2.2	-0.5	-1.3	-0.2
1	140	69.0	24.7	26.7	0.9	19.0	17.9
	141	-69.0	7.8	60.0	-0.9	22.6	3.3
2	140	-132.9	23.5	44.7	1.9	32.5	16.4
	141	132.9	9.0	99.7	-1.9	36.2	1.8
3	140	146.4	28.4	26.4	0.8	19.2	22.6
	141	-146.4	4.1	60.3	-0.8	23.2	7.8
4	140	98.2	86.3	-0.8	-0.6	0.3	94.5
	141	-98.2	-53.8	0.8	0.6	1.6	80.7
5	140	239.0	-27.9	-0.0	0.4	-0.5	-44.8
	141	-239.0	52.9	0.0	-0.4	0.5	-56.2
6	140	27.0	-11.8	-0.4	0.8	1.1	-24.9
	141	-27.0	36.8	0.4	-0.8	-0.2	-36.0
7	140	55.0	18.2	17.8	0.6	12.6	12.7
	141	-55.0	6.8	40.0	-0.6	15.1	1.6
8	140	-79.6	17.4	29.8	1.2	21.6	11.7
	141	79.6	7.6	66.5	-1.2	24.2	0.5
9	140	106.6	20.7	17.6	0.5	12.8	15.9
	141	-106.6	4.3	40.2	-0.5	15.5	4.6
10	140	74.5	59.3	-0.5	-0.4	0.2	63.8
	141	-74.5	-34.3	0.5	0.4	1.1	53.2
11	140	273.1	20.9	-0.5	-0.4	-0.5	16.1
	141	-273.1	4.1	0.5	0.4	1.7	4.9
12	140	209.7	20.6	5.5	-0.1	4.0	15.7
	141	-209.7	4.4	13.7	0.1	6.2	4.5
13	140	144.9	15.6	-0.2	-0.2	-0.4	9.3
	141	-144.9	9.4	0.2	0.2	0.8	-1.6
14	140	240.5	29.0	-0.5	-0.4	-0.3	26.1
	141	-240.5	-4.0	0.5	0.4	1.6	15.0
15	140	-131.2	14.9	30.0	1.3	21.5	8.6
	141	131.2	10.1	66.2	-1.3	23.8	-2.5
16	140	248.1	-31.4	0.0	0.5	-0.5	-49.2
	141	-248.1	56.4	-0.0	-0.5	0.5	-60.6
17	140	17.2	-14.0	-0.5	0.9	1.2	-27.6
	141	-17.2	39.0	0.5	-0.9	-0.4	-38.7
1	141	117.5	-9.7	59.2	-0.7	-22.7	-25.1
	142	-117.5	42.1	27.2	0.7	-17.2	-39.4
2	141	-78.6	-6.9	98.3	-1.6	-36.4	-21.7

Comb.	Nodo	N [kg]	T1-2 [kg]	T1-3 [kg]	Mt [kgm]	M1-3 [kgm]	M1-2 [kgm]
	142	78.6	39.3	45.7	1.6	-29.2	-35.9
3	141	193.1	-13.7	59.4	-0.6	-23.3	-30.0
	142	-193.1	46.1	27.0	0.6	-17.1	-44.5
4	141	30.9	55.3	-0.1	0.2	-1.7	56.1
	142	-30.9	-22.9	0.1	-0.2	1.9	41.4
5	141	347.2	-43.2	0.5	0.7	-0.5	-64.2
	142	-347.2	68.1	-0.5	-0.7	-0.8	-74.5
6	141	53.7	-26.8	0.5	1.0	0.2	-43.8
	142	-53.7	51.8	-0.5	-1.0	-1.2	-54.2
7	141	90.5	-6.0	39.5	-0.5	-15.2	-17.6
	142	-90.5	30.9	18.1	0.5	-11.4	-28.5
8	141	-40.2	-4.1	65.5	-1.0	-24.3	-15.3
	142	40.2	29.1	30.5	1.0	-19.4	-26.1
9	141	140.9	-8.7	39.6	-0.4	-15.6	-20.8
	142	-140.9	33.6	18.0	0.4	-11.3	-31.9
10	141	32.8	37.3	-0.1	0.1	-1.2	36.6
	142	-32.8	-12.4	0.1	-0.1	1.3	25.4
11	141	299.8	-9.0	0.4	0.4	-1.7	-21.2
	142	-299.8	33.9	-0.4	-0.4	0.6	-32.3
12	141	238.5	-8.3	13.5	0.1	-6.3	-20.4
	142	-238.5	33.3	5.7	-0.1	-3.4	-31.4
13	141	171.1	-1.6	0.1	0.2	-0.8	-12.2
	142	-171.1	26.5	-0.1	-0.2	0.5	-22.9
14	141	253.1	-0.0	0.3	0.3	-1.6	-10.0
	142	-253.1	25.0	-0.3	-0.3	0.8	-21.1
15	141	-90.6	-1.5	65.4	-1.1	-23.9	-12.0
	142	90.6	26.4	30.6	1.1	-19.5	-22.8
16	141	363.0	-46.8	0.5	0.8	-0.5	-68.7
	142	-363.0	71.7	-0.5	-0.8	-0.9	-79.0
17	141	44.2	-29.1	0.5	1.1	0.3	-46.6
	142	-44.2	54.0	-0.5	-1.1	-1.3	-57.0
1	142	312.5	9.2	3.0	-5.1	19.8	-18.8
	143	-312.5	62.4	83.7	5.1	81.3	-47.9
2	142	90.8	12.1	3.9	-8.9	33.5	-15.0
	143	-90.8	59.5	140.7	8.9	137.7	-44.3
3	142	423.5	4.2	3.3	-5.0	19.6	-25.1
	143	-423.5	67.4	83.4	5.0	80.6	-54.0
4	142	178.1	51.6	3.5	0.3	-2.0	34.7
	143	-178.1	20.0	-3.5	-0.3	-6.8	4.9
5	142	489.3	-12.4	-0.8	0.3	0.8	-39.1
	143	-489.3	67.4	0.8	-0.3	1.4	-60.8
6	142	148.7	-2.2	-0.9	-0.3	1.2	-26.1
	143	-148.7	57.2	0.9	0.3	1.3	-48.2
7	142	230.0	8.6	2.1	-3.3	13.1	-12.5
	143	-230.0	46.4	55.8	3.3	54.1	-34.8
8	142	82.1	10.6	2.7	-5.9	22.3	-9.9

Comb.	Nodo	N [kg]	T1-2 [kg]	T1-3 [kg]	Mt [kgm]	M1-3 [kgm]	M1-2 [kgm]
	143	-82.1	44.5	93.7	5.9	91.7	-32.4
9	142	304.0	5.4	2.3	-3.3	13.0	-16.6
	143	-304.0	49.7	55.5	3.3	53.6	-38.9
10	142	140.4	36.9	2.4	0.3	-1.4	23.2
	143	-140.4	18.2	-2.4	-0.3	-4.6	0.3
11	142	470.3	5.0	1.3	0.5	-0.7	-17.2
	143	-470.3	50.1	-1.3	-0.5	-2.5	-39.3
12	142	402.5	5.7	1.6	-0.8	3.9	-16.3
	143	-402.5	49.4	17.7	0.8	16.2	-38.5
13	142	280.5	13.5	0.8	0.3	-0.5	-6.3
	143	-280.5	41.5	-0.8	-0.3	-1.5	-28.7
14	142	414.2	10.9	1.5	0.4	-0.8	-9.7
	143	-414.2	44.1	-1.5	-0.4	-3.0	-31.9
15	142	8.2	13.9	2.5	-5.9	22.4	-5.7
	143	-8.2	41.2	93.9	5.9	92.1	-28.4
16	142	508.8	-14.7	-1.0	0.7	0.9	-42.1
	143	-508.8	69.8	1.0	-0.7	1.6	-63.8
17	142	139.2	-3.6	-1.1	1.0	1.4	-28.0
	143	-139.2	58.7	1.1	-1.0	1.6	-50.0
1	143	-318.2	35.7	98.1	3.2	-87.4	14.7
	144	318.2	35.8	-11.5	-3.2	-49.6	-14.8
2	143	-342.9	37.3	163.3	5.2	-145.7	16.6
	144	342.9	34.2	-18.9	-5.2	-82.1	-12.8
3	143	-368.3	34.4	98.1	3.2	-87.4	13.0
	144	368.3	37.1	-11.5	-3.2	-49.7	-16.4
4	143	312.6	77.2	1.1	-0.3	-2.5	66.8
	144	-312.6	-5.7	-1.1	0.3	-0.2	36.9
5	143	-435.7	6.2	0.3	0.5	-0.1	-15.3
	144	435.7	48.8	-0.3	-0.5	-2.1	-38.0
6	143	-237.7	31.5	3.0	0.7	-4.4	16.5
	144	237.7	23.5	-3.0	-0.7	-3.5	-6.5
7	143	-219.1	27.7	65.4	2.1	-58.2	11.6
	144	219.1	27.3	-7.7	-2.1	-33.1	-11.1
8	143	-235.6	28.8	108.9	3.5	-97.1	12.9
	144	235.6	26.2	-12.6	-3.5	-54.8	-9.7
9	143	-252.5	26.8	65.4	2.1	-58.2	10.5
	144	252.5	28.2	-7.7	-2.1	-33.2	-12.2
10	143	201.4	55.4	0.7	-0.2	-1.6	46.4
	144	-201.4	-0.4	-0.7	0.2	-0.2	23.4
11	143	-199.9	25.9	0.2	0.0	0.1	9.4
	144	199.9	29.1	-0.2	-0.0	-0.6	-13.4
12	143	-211.2	26.3	21.9	0.7	-19.3	9.9
	144	211.2	28.7	-2.7	-0.7	-11.4	-12.8
13	143	-110.4	28.1	0.1	0.0	0.2	12.1
	144	110.4	26.9	-0.1	-0.0	-0.4	-10.7
14	143	-123.8	31.7	0.3	-0.0	-0.2	16.6

Comb.	Nodo	N [kg]	T1-2 [kg]	T1-3 [kg]	Mt [kgm]	M1-3 [kgm]	M1-2 [kgm]
	144	123.8	23.3	-0.3	0.0	-0.5	-6.2
15	143	-202.2	29.6	108.9	3.5	-97.1	14.0
	144	202.2	25.4	-12.6	-3.5	-54.7	-8.7
16	143	-463.7	4.3	0.4	0.5	-0.1	-17.7
	144	463.7	50.7	-0.4	-0.5	-2.2	-40.4
17	143	-249.9	31.7	3.3	0.8	-4.8	16.7
	144	249.9	23.3	-3.3	-0.8	-3.8	-6.2
1	144	-361.5	36.9	-8.7	-4.0	49.4	16.4
	145	361.5	34.6	95.3	4.0	80.6	-13.4
2	144	-408.2	38.1	-13.6	-6.7	81.8	17.9
	145	408.2	33.4	157.9	6.7	132.6	-12.0
3	144	-409.8	36.2	-8.8	-4.0	49.5	15.4
	145	409.8	35.3	95.5	4.0	80.9	-14.4
4	144	224.5	74.9	0.3	-0.3	0.3	63.8
	145	-224.5	-3.4	-0.3	0.3	-1.1	34.0
5	144	-378.9	8.0	-1.6	0.6	2.0	-13.0
	145	378.9	47.0	1.6	-0.6	2.0	-35.7
6	144	-226.9	31.1	-1.4	0.8	3.4	16.0
	145	226.9	23.9	1.4	-0.8	-0.8	-7.0
7	144	-249.5	28.5	-5.9	-2.6	33.0	12.7
	145	249.5	26.5	63.6	2.6	53.9	-10.2
8	144	-280.7	29.3	-9.1	-4.5	54.6	13.7
	145	280.7	25.7	105.4	4.5	88.6	-9.3
9	144	-281.7	28.0	-6.0	-2.6	33.0	12.1
	145	281.7	27.0	63.7	2.6	54.1	-10.8
10	144	141.1	53.8	0.1	-0.2	0.3	44.4
	145	-141.1	1.2	-0.1	0.2	-0.6	21.4
11	144	-207.6	27.2	-1.0	0.1	0.6	10.9
	145	207.6	27.8	1.0	-0.1	1.9	-11.8
12	144	-226.3	27.5	-2.7	-0.8	11.4	11.4
	145	226.3	27.5	21.9	0.8	19.3	-11.4
13	144	-120.8	28.4	-0.8	0.1	0.4	12.5
	145	120.8	26.6	0.8	-0.1	1.5	-10.3
14	144	-141.9	32.4	-0.8	0.1	0.6	17.5
	145	141.9	22.6	0.8	-0.1	1.5	-5.3
15	144	-248.5	29.8	-9.0	-4.5	54.5	14.4
	145	248.5	25.2	105.3	4.5	88.4	-8.7
16	144	-401.4	6.2	-1.7	0.6	2.2	-15.2
	145	401.4	48.8	1.7	-0.6	2.1	-37.9
17	144	-237.3	31.3	-1.4	0.8	3.6	16.2
	145	237.3	23.7	1.4	-0.8	-1.0	-6.8
1	153	277.6	155.6	-29.5	-2.1	4.1	177.3
	154	-277.6	1.5	-49.2	2.1	-31.2	34.6
2	153	475.4	259.0	-29.9	-3.6	4.7	294.6
	154	-475.4	3.0	-48.8	3.6	-30.6	57.3

Comb.	Nodo	N [kg]	T1-2 [kg]	T1-3 [kg]	Mt [kgm]	M1-3 [kgm]	M1-2 [kgm]
3	153	259.3	155.5	-34.8	-2.2	11.3	176.9
	154	-259.3	1.7	-43.9	2.2	-23.8	34.5
4	153	82.9	-5.1	-102.9	0.3	103.9	-17.0
	154	-82.9	5.1	24.2	-0.3	70.9	2.9
5	153	-6.0	1.6	22.6	0.1	-58.8	3.7
	154	6.0	-1.6	-83.1	-0.1	-86.7	0.2
6	153	63.3	3.0	-22.0	-0.6	2.5	6.0
	154	-63.3	-3.0	-38.5	0.6	-25.1	2.3
7	153	185.5	103.8	-22.7	-1.4	3.3	118.3
	154	-185.5	1.0	-37.8	1.4	-23.9	23.1
8	153	317.3	172.7	-23.0	-2.4	3.7	196.5
	154	-317.3	2.0	-37.5	2.4	-23.5	38.2
9	153	173.3	103.7	-26.3	-1.4	8.1	118.0
	154	-173.3	1.1	-34.2	1.4	-19.0	23.0
10	153	55.6	-3.4	-71.7	0.2	69.8	-11.2
	154	-55.6	3.4	11.2	-0.2	44.1	1.9
11	153	-23.7	0.2	-27.0	0.0	9.2	0.5
	154	23.7	-0.2	-33.5	-0.0	-18.1	0.2
12	153	42.1	34.7	-27.0	-0.5	9.2	39.6
	154	-42.1	0.2	-33.5	0.5	-18.0	7.7
13	153	-3.2	0.3	-22.8	0.1	3.5	0.7
	154	3.2	-0.3	-37.7	-0.1	-24.0	0.1
14	153	-10.2	-0.5	-36.8	0.0	22.4	-1.9
	154	10.2	0.5	-23.7	-0.0	-4.5	0.5
15	153	329.5	172.8	-19.5	-2.3	-1.2	196.8
	154	-329.5	1.8	-41.0	2.3	-28.5	38.3
16	153	-6.6	1.8	26.3	0.1	-63.8	3.9
	154	6.6	-1.8	-86.8	-0.1	-91.7	0.3
17	153	68.8	3.3	-22.1	-0.6	2.6	6.5
	154	-68.8	-3.3	-38.4	0.6	-25.0	2.5
1	154	252.7	55.7	-29.1	-0.4	23.3	-30.1
	155	-252.7	101.5	-6.7	0.4	7.5	-32.9
2	154	441.1	93.4	-25.7	-0.7	18.6	-49.9
	155	-441.1	168.5	-10.1	0.7	2.8	-53.4
3	154	212.0	55.5	-34.3	-0.4	30.7	-30.1
	155	-212.0	101.7	-1.4	0.4	14.5	-33.5
4	154	50.4	-2.5	-125.0	-0.5	154.8	-2.9
	155	-50.4	2.5	89.2	0.5	139.8	-4.1
5	154	-6.2	-0.2	49.0	0.7	-80.1	-0.2
	155	6.2	0.2	-76.5	-0.7	-92.3	0.1
6	154	70.5	-0.9	19.2	1.1	-39.3	-2.2
	155	-70.5	0.9	-46.7	-1.1	-51.4	0.5
7	154	170.6	37.1	-21.4	-0.2	16.5	-20.1
	155	-170.6	67.7	-6.1	0.2	4.4	-21.9
8	154	296.2	62.3	-19.1	-0.4	13.4	-33.2
	155	-296.2	112.3	-8.4	0.4	1.3	-35.6

Comb.	Nodo	N [kg]	T1-2 [kg]	T1-3 [kg]	Mt [kgm]	M1-3 [kgm]	M1-2 [kgm]
9	154	143.5	37.0	-24.9	-0.3	21.5	-20.0
	155	-143.5	67.8	-2.6	0.3	9.1	-22.3
10	154	35.7	-1.7	-85.3	-0.3	104.2	-1.9
	155	-35.7	1.7	57.8	0.3	92.6	-2.7
11	154	-43.2	-0.6	-26.6	0.1	23.9	-0.2
	155	43.2	0.6	-0.9	-0.1	11.5	-1.5
12	154	19.4	12.0	-25.7	-0.1	22.6	-6.8
	155	-19.4	23.0	-1.8	0.1	10.2	-8.4
13	154	2.4	-0.2	-18.9	0.2	13.2	-0.1
	155	-2.4	0.2	-8.6	-0.2	1.1	-0.6
14	154	-32.7	-0.8	-38.9	-0.0	40.8	-0.5
	155	32.7	0.8	11.4	0.0	28.4	-1.8
15	154	323.3	62.4	-15.6	-0.4	8.5	-33.3
	155	-323.3	112.2	-11.9	0.4	-3.4	-35.3
16	154	-8.0	-0.2	54.5	0.7	-87.8	-0.2
	155	8.0	0.2	-82.0	-0.7	-99.9	0.1
17	154	75.6	-1.0	22.3	1.2	-43.5	-2.5
	155	-75.6	1.0	-49.8	-1.2	-55.6	0.6
1	155	232.9	103.8	-35.8	4.1	32.4	32.9
	156	-232.9	53.5	0.0	-4.1	16.9	36.3
2	155	406.2	172.3	-30.7	6.4	25.6	53.4
	156	-406.2	89.9	-5.1	-6.4	9.7	60.0
3	155	198.2	104.0	-30.1	4.1	24.7	33.5
	156	-198.2	53.3	-5.7	-4.1	8.9	36.3
4	155	83.5	1.3	-135.0	0.1	168.5	4.1
	156	-83.5	-1.3	99.2	-0.1	153.8	-0.6
5	155	-30.2	0.8	30.9	0.8	-55.7	-0.0
	156	30.2	-0.8	-58.4	-0.8	-67.3	2.1
6	155	58.3	1.4	1.2	1.3	-14.7	-0.5
	156	-58.3	-1.4	-28.7	-1.3	-26.3	4.0
7	155	156.6	69.2	-28.4	2.7	26.1	22.0
	156	-156.6	35.7	0.9	-2.7	14.2	24.2
8	155	272.2	114.9	-25.0	4.3	21.5	35.6
	156	-272.2	59.9	-2.5	-4.3	9.4	40.0
9	155	133.5	69.4	-24.6	2.8	20.9	22.4
	156	-133.5	35.5	-3.0	-2.8	8.8	24.2
10	155	57.0	0.9	-94.5	0.1	116.8	2.7
	156	-57.0	-0.9	67.0	-0.1	105.5	-0.4
11	155	-38.8	0.7	-28.8	0.4	26.7	1.6
	156	38.8	-0.7	1.3	-0.4	14.8	0.4
12	155	18.8	23.6	-27.2	1.2	24.5	8.5
	156	-18.8	11.4	-0.3	-1.2	12.5	8.3
13	155	-0.5	0.3	-33.8	0.3	33.4	0.7
	156	0.5	-0.3	6.3	-0.3	21.7	0.3
14	155	-24.2	0.8	-41.1	0.4	43.6	1.9
	156	24.2	-0.8	13.6	-0.4	31.7	0.2

Comb.	Nodo	N [kg]	T1-2 [kg]	T1-3 [kg]	Mt [kgm]	M1-3 [kgm]	M1-2 [kgm]
15	155	295.4	114.8	-28.8	4.2	26.7	35.3
	156	-295.4	60.1	1.3	-4.2	14.8	40.0
16	155	-33.6	0.9	36.4	0.8	-63.3	-0.1
	156	33.6	-0.9	-64.0	-0.8	-74.9	2.3
17	155	62.6	1.5	4.2	1.4	-19.0	-0.5
	156	-62.6	-1.5	-31.8	-1.4	-30.6	4.3
1	156	161.3	-1.3	-106.0	5.1	110.0	-41.2
	157	-161.3	158.2	27.4	-5.1	73.2	-177.8
2	156	344.5	-3.6	-96.0	8.5	96.3	-68.4
	157	-344.5	265.3	17.5	-8.5	59.6	-300.9
3	156	160.5	-0.9	-102.4	5.2	104.8	-41.2
	157	-160.5	157.9	23.8	-5.2	68.5	-177.0
4	156	78.3	2.5	-189.6	-0.1	224.4	0.7
	157	-78.3	-2.5	111.0	0.1	188.4	6.1
5	156	-139.1	-0.7	-24.6	0.5	6.6	-2.1
	157	139.1	0.7	-35.8	-0.5	-21.9	0.3
6	156	-28.3	-2.5	-49.6	1.1	41.0	-4.1
	157	28.3	2.5	-10.8	-1.1	12.4	-2.8
7	156	97.6	-0.7	-80.5	3.4	83.2	-27.5
	157	-97.6	105.4	20.1	-3.4	54.9	-118.2
8	156	219.8	-2.3	-73.9	5.7	74.1	-45.6
	157	-219.8	176.7	13.5	-5.7	45.9	-200.3
9	156	97.1	-0.5	-78.1	3.4	79.8	-27.5
	157	-97.1	105.2	17.7	-3.4	51.8	-117.6
10	156	42.3	1.8	-136.3	-0.1	159.5	0.5
	157	-42.3	-1.8	75.8	0.1	131.7	4.4
11	156	-83.3	1.7	-83.2	-0.0	86.8	-0.3
	157	83.3	-1.7	22.8	0.0	58.7	5.0
12	156	-22.5	1.0	-80.4	1.1	83.0	-9.3
	157	22.5	33.9	20.0	-1.1	54.9	-35.9
13	156	-78.9	1.2	-80.8	-0.1	83.7	-0.2
	157	78.9	-1.2	20.4	0.1	55.2	3.5
14	156	-58.0	1.8	-92.9	-0.0	100.1	-0.1
	157	58.0	-1.8	32.5	0.0	72.1	5.0
15	156	220.3	-2.5	-76.3	5.6	77.5	-45.6
	157	-220.3	176.9	15.9	-5.6	49.0	-200.9
16	156	-144.2	-0.8	-20.0	0.6	0.2	-2.3
	157	144.2	0.8	-40.5	-0.6	-28.4	0.0
17	156	-23.9	-2.8	-47.0	1.3	37.4	-4.5
	157	23.9	2.8	-13.4	-1.3	8.8	-3.3
1	157	184.7	135.7	-140.6	2.9	144.9	134.1
	158	-184.7	7.4	69.0	-2.9	117.6	26.5
2	157	399.2	226.6	-124.9	5.0	125.3	224.3
	158	-399.2	11.8	53.3	-5.0	97.8	44.6
3	157	186.6	135.7	-160.2	2.8	169.1	133.9

Comb.	Nodo	N [kg]	T1-2 [kg]	T1-3 [kg]	Mt [kgm]	M1-3 [kgm]	M1-2 [kgm]
	158	-186.6	7.4	88.6	-2.8	142.4	26.7
4	157	-269.5	-1.6	-232.8	-0.1	260.4	-3.5
	158	269.5	1.6	161.2	0.1	232.6	-0.4
5	157	-80.4	1.5	-18.4	0.0	-0.6	3.2
	158	80.4	-1.5	-36.7	-0.0	-22.3	-0.4
6	157	-2.7	3.5	-46.2	0.6	34.2	6.6
	158	2.7	-3.5	-8.9	-0.6	12.5	2.1
7	157	113.4	90.4	-102.8	2.0	104.8	89.4
	158	-113.4	5.0	47.7	-2.0	83.7	17.6
8	157	256.4	151.0	-92.3	3.4	91.8	149.5
	158	-256.4	7.9	37.3	-3.4	70.4	29.6
9	157	114.7	90.4	-115.9	1.9	120.9	89.2
	158	-114.7	5.0	60.8	-1.9	100.2	17.7
10	157	-189.3	-1.1	-164.2	-0.1	181.8	-2.4
	158	189.3	1.1	109.2	0.1	160.3	-0.4
11	157	-92.1	-0.5	-122.0	-0.2	128.5	-0.9
	158	92.1	0.5	66.9	0.2	107.9	-0.4
12	157	-21.4	29.8	-117.8	0.5	123.3	29.1
	158	21.4	2.0	62.7	-0.5	102.6	5.6
13	157	-84.2	-0.5	-88.6	-0.0	87.2	-0.5
	158	84.2	0.5	33.5	0.0	65.6	-0.6
14	157	-110.6	-0.6	-132.2	-0.2	141.3	-1.2
	158	110.6	0.6	77.1	0.2	120.6	-0.4
15	157	255.2	151.0	-79.3	3.5	75.6	149.6
	158	-255.2	7.9	24.2	-3.5	53.9	29.5
16	157	-79.2	1.7	-13.1	0.0	-7.2	3.6
	158	79.2	-1.7	-41.9	-0.0	-28.9	-0.3
17	157	6.4	3.9	-43.3	0.7	30.6	7.3
	158	-6.4	-3.9	-11.8	-0.7	8.9	2.4
1	159	-84.4	-94.0	62.8	0.2	-90.3	-34.8
	158	84.4	-48.9	-95.3	-0.2	-107.4	-21.6
2	159	168.8	-156.0	48.9	0.8	-73.2	-56.1
	158	-168.8	-82.1	-81.4	-0.8	-89.8	-36.3
3	159	-140.0	-94.3	80.6	0.1	-112.1	-35.4
	158	140.0	-48.6	-113.1	-0.1	-129.9	-21.8
4	159	-455.4	-0.8	189.0	-0.8	-248.3	-2.2
	158	455.4	0.8	-221.5	0.8	-264.9	0.3
5	159	-224.7	-0.2	-57.0	0.4	61.7	-0.8
	158	224.7	0.2	32.0	-0.4	49.5	0.3
6	159	-133.5	-0.9	-18.9	0.9	14.1	-0.2
	158	133.5	0.9	-6.1	-0.9	2.0	-1.9
7	159	-78.8	-62.7	44.2	0.1	-64.5	-23.3
	158	78.8	-32.6	-69.2	-0.1	-77.4	-14.3
8	159	90.0	-104.0	35.0	0.5	-53.1	-37.5
	158	-90.0	-54.8	-60.0	-0.5	-65.6	-24.1
9	159	-115.9	-62.9	56.1	0.0	-79.0	-23.7

Comb.	Nodo	N [kg]	T1-2 [kg]	T1-3 [kg]	Mt [kgm]	M1-3 [kgm]	M1-2 [kgm]
	158	115.9	-32.4	-81.1	-0.0	-92.4	-14.4
10	159	-326.2	-0.5	128.4	-0.5	-169.8	-1.5
	158	326.2	0.5	-153.4	0.5	-182.4	0.3
11	159	-336.7	-0.7	62.6	-0.5	-87.1	-2.1
	158	336.7	0.7	-87.6	0.5	-100.7	0.3
12	159	-255.9	-21.4	58.8	-0.3	-82.4	-9.3
	158	255.9	-10.3	-83.8	0.3	-95.8	-4.6
13	159	-235.8	-0.2	34.2	-0.2	-52.2	-1.2
	158	235.8	0.2	-59.2	0.2	-64.5	0.6
14	159	-339.2	-0.7	77.5	-0.5	-105.8	-2.1
	158	339.2	0.7	-102.5	0.5	-119.2	0.3
15	159	127.0	-103.8	23.1	0.6	-38.5	-37.1
	158	-127.0	-55.0	-48.1	-0.6	-50.6	-24.0
16	159	-224.7	-0.2	-64.1	0.5	70.6	-0.8
	158	224.7	0.2	39.1	-0.5	58.4	0.3
17	159	-124.4	-1.0	-22.9	1.0	19.0	-0.2
	158	124.4	1.0	-2.1	-1.0	6.9	-2.2
1	160	-113.0	-48.9	-85.7	-0.3	95.2	20.9
	159	113.0	-93.6	53.2	0.3	78.0	34.8
2	160	155.5	-82.3	-80.0	-0.9	87.8	34.8
	159	-155.5	-155.2	47.6	0.9	71.3	56.1
3	160	-172.8	-48.7	-100.4	-0.3	113.9	20.9
	159	172.8	-93.8	68.0	0.3	96.0	35.4
4	160	-474.9	0.8	50.5	0.0	-74.4	-0.1
	159	474.9	-0.8	-82.9	-0.0	-91.8	2.1
5	160	-251.4	1.0	-120.7	0.8	141.0	1.7
	159	251.4	-1.0	95.8	-0.8	129.0	0.8
6	160	-161.7	1.5	-82.1	1.1	92.8	3.1
	159	161.7	-1.5	57.2	-1.1	80.8	0.2
7	160	-102.3	-32.6	-60.4	-0.2	66.3	14.0
	159	102.3	-62.4	35.5	0.2	53.3	23.3
8	160	76.6	-54.8	-56.7	-0.6	61.4	23.3
	159	-76.6	-103.5	31.8	0.6	48.8	37.5
9	160	-142.2	-32.4	-70.2	-0.2	78.8	14.0
	159	142.2	-62.6	45.3	0.2	65.3	23.7
10	160	-343.6	0.6	30.3	0.0	-46.8	-0.1
	159	343.6	-0.6	-55.3	-0.0	-59.9	1.5
11	160	-377.7	0.9	-67.8	0.3	75.9	0.1
	159	377.7	-0.9	42.9	-0.3	62.1	2.1
12	160	-291.9	-10.2	-66.8	0.2	74.6	4.7
	159	291.9	-21.4	41.9	-0.2	61.0	9.2
13	160	-271.3	0.5	-41.7	0.2	42.7	0.2
	159	271.3	-0.5	16.8	-0.2	30.3	1.1
14	160	-375.9	0.8	-49.4	0.3	53.0	0.1
	159	375.9	-0.8	24.5	-0.3	39.2	2.0
15	160	116.5	-55.0	-46.9	-0.6	48.9	23.2

Comb.	Nodo	N [kg]	T1-2 [kg]	T1-3 [kg]	Mt [kgm]	M1-3 [kgm]	M1-2 [kgm]
	159	-116.5	-103.4	21.9	0.6	36.9	37.1
16	160	-251.0	1.0	-127.9	0.8	149.9	1.8
	159	251.0	-1.0	103.0	-0.8	137.9	0.8
17	160	-152.2	1.5	-86.0	1.2	97.7	3.4
	159	152.2	-1.5	61.1	-1.2	85.7	0.2
1	160	93.7	10.0	70.6	-3.0	-119.0	-25.8
	161	-93.7	133.1	-142.2	3.0	-147.2	-128.3
2	160	351.2	17.0	58.5	-5.4	-104.0	-43.0
	161	-351.2	221.5	-130.1	5.4	-132.0	-212.9
3	160	82.6	10.0	89.4	-2.9	-142.8	-25.8
	161	-82.6	133.1	-161.0	2.9	-170.6	-128.3
4	160	-227.4	-1.3	-29.4	0.4	6.2	0.1
	161	227.4	1.3	-42.2	-0.4	-22.2	-3.4
5	160	-207.2	-0.9	75.1	0.6	-116.9	-1.8
	161	207.2	0.9	-130.1	-0.6	-140.0	-1.5
6	160	-99.5	-2.9	22.8	0.9	-51.5	-3.3
	161	99.5	2.9	-77.9	-0.9	-74.5	-4.6
7	160	39.5	6.6	48.2	-2.0	-83.9	-17.3
	161	-39.5	88.8	-103.3	2.0	-105.8	-85.7
8	160	211.2	11.2	40.2	-3.6	-73.9	-28.7
	161	-211.2	147.7	-95.3	3.6	-95.7	-142.1
9	160	32.2	6.6	60.8	-1.9	-99.8	-17.3
	161	-32.2	88.8	-115.9	1.9	-121.4	-85.7
10	160	-174.5	-1.0	-18.4	0.3	-0.4	0.0
	161	174.5	1.0	-36.7	-0.3	-22.5	-2.4
11	160	-215.4	-0.5	62.9	0.4	-102.3	-0.1
	161	215.4	0.5	-118.0	-0.4	-124.2	-1.1
12	160	-130.7	1.9	60.0	-0.4	-98.6	-5.8
	161	130.7	29.9	-115.1	0.4	-120.5	-29.3
13	160	-190.9	-0.5	30.0	0.2	-60.6	-0.2
	161	190.9	0.5	-85.1	-0.2	-83.4	-1.1
14	160	-207.8	-0.6	48.3	0.4	-84.0	-0.1
	161	207.8	0.6	-103.4	-0.4	-105.9	-1.3
15	160	218.5	11.2	27.6	-3.7	-58.0	-28.7
	161	-218.5	147.7	-82.7	3.7	-80.1	-142.1
16	160	-208.1	-0.9	79.5	0.6	-136.2	-1.9
	161	208.1	0.9	-134.6	-0.6	-145.5	-1.6
17	160	-89.8	-3.2	22.8	0.9	-97.4	-3.6
	161	89.8	3.2	-77.9	-0.9	-74.5	-5.1
1	171	-1003.6	9577.4	52.4	2.9	-201.6	0.0
	172	1003.6	9577.4	-52.4	-2.9	-374.4	0.0
2	171	-2432.2	7327.4	63.1	4.8	-229.1	0.0
	172	2432.2	7327.4	-63.1	-4.8	-464.6	0.0
3	171	-1108.9	7327.4	55.1	2.9	-216.5	0.0
	172	1108.9	7327.4	-55.1	-2.9	-389.5	0.0

Comb.	Nodo	N [kg]	T1-2 [kg]	T1-3 [kg]	Mt [kgm]	M1-3 [kgm]	M1-2 [kgm]
4	171	-2078.7	7327.4	-51.7	-0.1	442.4	0.0
	172	2078.7	7327.4	51.7	0.1	126.7	0.0
5	171	-182.0	4598.0	32.7	0.9	-164.9	0.0
	172	182.0	4598.0	-32.7	-0.9	-195.4	0.0
6	171	-37.7	4598.0	35.8	1.7	-174.3	0.0
	172	37.7	4598.0	-35.8	-1.7	-221.3	0.0
7	171	-624.6	6598.0	36.9	2.0	-143.0	0.0
	172	624.6	6598.0	-36.9	-2.0	-263.4	0.0
8	171	-1577.0	5098.0	44.1	3.2	-161.4	0.0
	172	1577.0	5098.0	-44.1	-3.2	-323.5	0.0
9	171	-694.8	5098.0	38.8	2.0	-153.0	0.0
	172	694.8	5098.0	-38.8	-2.0	-273.5	0.0
10	171	-1341.4	5098.0	-32.4	-0.1	286.3	0.0
	172	1341.4	5098.0	32.4	0.1	70.7	0.0
11	171	594.7	5098.0	25.7	0.1	-115.1	0.0
	172	-594.7	5098.0	-25.7	-0.1	-167.9	0.0
12	171	134.0	4598.0	29.6	0.7	-125.4	0.0
	172	-134.0	4598.0	-29.6	-0.7	-199.7	0.0
13	171	527.8	4598.0	19.8	0.1	-85.6	0.0
	172	-527.8	4598.0	-19.8	-0.1	-132.1	0.0
14	171	181.1	4598.0	14.2	0.1	-35.9	0.0
	172	-181.1	4598.0	-14.2	-0.1	-120.9	0.0
15	171	-1506.8	6598.0	42.3	3.2	-151.4	0.0
	172	1506.8	6598.0	-42.3	-3.2	-313.5	0.0
16	171	-245.4	4598.0	33.9	1.0	-172.4	0.0
	172	245.4	4598.0	-33.9	-1.0	-201.8	0.0
17	171	-93.3	4598.0	37.5	1.8	-183.6	0.0
	172	93.3	4598.0	-37.5	-1.8	-231.0	0.0
1	172	-9990.5	1297.7	12.7	-0.4	-57.6	0.0
	173	9990.5	1297.7	-12.7	0.4	-69.7	0.0
2	172	-10696.1	1297.7	26.1	-0.5	-67.7	0.0
	173	10696.1	1297.7	-26.1	0.5	-193.6	0.0
3	172	-10722.0	1297.7	9.6	-0.4	-49.1	0.0
	173	10722.0	1297.7	-9.6	0.4	-47.2	0.0
4	172	-8924.2	1297.7	-32.8	-0.3	104.5	0.0
	173	8924.2	1297.7	32.8	0.3	223.0	0.0
5	172	-5041.9	998.2	20.4	0.6	-138.6	0.0
	173	5041.9	998.2	-20.4	-0.6	-67.1	0.0
6	172	-5249.0	998.2	28.4	1.1	-171.8	0.0
	173	5249.0	998.2	-28.4	-1.1	-115.7	0.0
7	172	-7192.2	998.2	8.5	-0.3	-42.8	0.0
	173	7192.2	998.2	-8.5	0.3	-42.6	0.0
8	172	-7662.6	998.2	17.5	-0.3	-49.5	0.0
	173	7662.6	998.2	-17.5	0.3	-125.2	0.0
9	172	-7679.9	998.2	6.5	-0.2	-37.1	0.0
	173	7679.9	998.2	-6.5	0.2	-27.6	0.0

Comb.	Nodo	N [kg]	T1-2 [kg]	T1-3 [kg]	Mt [kgm]	M1-3 [kgm]	M1-2 [kgm]
10	172	-6481.3	998.2	-21.8	-0.2	65.3	0.0
	173	6481.3	998.2	21.8	0.2	152.6	0.0
11	172	-6457.4	998.2	-6.1	-0.1	-25.6	0.0
	173	6457.4	998.2	6.1	0.1	86.8	0.0
12	172	-6750.0	998.2	-1.7	-0.1	-29.1	0.0
	173	6750.0	998.2	1.7	0.1	46.6	0.0
13	172	-5011.0	998.2	-1.8	-0.0	-32.8	0.0
	173	5011.0	998.2	1.8	0.0	50.4	0.0
14	172	-6513.8	998.2	-9.6	-0.1	-6.1	0.0
	173	6513.8	998.2	9.6	0.1	102.1	0.0
15	172	-7174.9	998.2	19.5	-0.3	-55.2	0.0
	173	7174.9	998.2	-19.5	0.3	-140.2	0.0
16	172	-5076.4	998.2	22.2	0.7	-147.5	0.0
	173	5076.4	998.2	-22.2	-0.7	-76.1	0.0
17	172	-5311.6	998.2	30.8	1.2	-183.7	0.0
	173	5311.6	998.2	-30.8	-1.2	-128.5	0.0
1	173	-115.9	211.8	-319.8	17.7	901.3	0.0
	174	115.9	566.8	319.8	-17.7	58.3	-532.4
2	173	-140.3	211.7	-471.1	24.3	1342.6	0.0
	174	140.3	566.9	471.1	-24.3	70.8	-532.8
3	173	-94.4	212.1	-321.0	17.8	915.4	0.0
	174	94.4	566.5	321.0	-17.8	47.5	-531.7
4	173	-233.9	218.0	-77.1	5.2	114.6	0.0
	174	233.9	560.6	77.1	-5.2	116.6	-513.8
5	173	-44.5	159.8	-111.6	10.2	306.0	0.0
	174	44.5	439.1	111.6	-10.2	22.3	-419.0
6	173	-55.8	163.6	-160.0	13.4	426.2	0.0
	174	55.8	435.3	160.0	-13.4	68.6	-407.5
7	173	-90.1	163.0	-220.7	12.6	617.0	0.0
	174	90.1	435.9	220.7	-12.6	45.3	-409.4
8	173	-106.4	162.9	-321.6	16.9	911.2	0.0
	174	106.4	436.0	321.6	-16.9	53.6	-409.7
9	173	-75.7	163.1	-221.5	12.6	626.4	0.0
	174	75.7	435.8	221.5	-12.6	38.1	-409.0
10	173	-168.8	167.1	-58.9	4.2	92.6	0.0
	174	168.8	431.8	58.9	-4.2	84.1	-397.0
11	173	-55.4	163.3	-67.0	6.0	173.5	0.0
	174	55.4	435.6	67.0	-6.0	27.7	-408.4
12	173	-63.1	163.3	-117.8	8.2	321.9	0.0
	174	63.1	435.7	117.8	-8.2	31.6	-408.6
13	173	-83.7	163.2	-61.8	5.8	143.5	0.0
	174	83.7	435.8	61.8	-5.8	41.8	-408.9
14	173	-75.6	164.1	-65.3	5.7	158.1	0.0
	174	75.6	434.8	65.3	-5.7	37.7	-406.1
15	173	-120.7	162.8	-320.8	16.9	901.8	0.0
	174	120.7	436.2	320.8	-16.9	60.8	-410.1

Comb.	Nodo	N [kg]	T1-2 [kg]	T1-3 [kg]	Mt [kgm]	M1-3 [kgm]	M1-2 [kgm]
16	173	-36.8	159.5	-116.7	10.6	324.0	0.0
	174	36.8	439.4	116.7	-10.6	20.1	-419.9
17	173	-51.1	163.6	-170.3	14.1	459.0	0.0
	174	51.1	435.4	170.3	-14.1	71.2	-407.7
1	174	-0.0	519.1	-0.0	-0.0	0.0	519.1
	175	0.0	0.0	0.0	0.0	0.0	0.0
2	174	-0.0	519.1	-0.0	-0.0	0.0	519.1
	175	0.0	0.0	0.0	0.0	0.0	0.0
3	174	-0.0	519.1	-0.0	-0.0	0.0	519.1
	175	0.0	0.0	0.0	0.0	0.0	0.0
4	174	0.0	519.1	0.0	0.0	0.0	519.1
	175	-0.0	0.0	-0.0	-0.0	-0.0	0.0
5	174	-10.6	398.1	0.2	-0.0	-0.3	397.0
	175	10.6	1.1	-0.2	0.0	0.0	-0.0
6	174	1.8	397.5	14.7	-0.0	-29.3	395.7
	175	-1.8	1.8	-14.7	0.0	-0.0	0.0
7	174	-0.0	399.3	-0.0	-0.0	0.0	399.3
	175	0.0	0.0	0.0	0.0	0.0	0.0
8	174	-0.0	399.3	-0.0	-0.0	0.0	399.3
	175	0.0	0.0	0.0	0.0	0.0	0.0
9	174	-0.0	399.3	-0.0	-0.0	0.0	399.3
	175	0.0	0.0	0.0	0.0	0.0	0.0
10	174	0.0	399.3	0.0	0.0	0.0	399.3
	175	-0.0	0.0	-0.0	-0.0	-0.0	0.0
11	174	0.0	399.3	-0.0	0.0	0.0	399.3
	175	-0.0	0.0	0.0	-0.0	-0.0	0.0
12	174	-0.0	399.3	-0.0	0.0	0.0	399.3
	175	0.0	0.0	0.0	-0.0	0.0	0.0
13	174	-0.0	399.3	-0.0	0.0	0.0	399.3
	175	0.0	0.0	0.0	-0.0	-0.0	0.0
14	174	0.0	399.3	-0.0	0.0	0.0	399.3
	175	-0.0	0.0	0.0	-0.0	-0.0	0.0
15	174	-0.0	399.3	-0.0	-0.0	0.0	399.3
	175	0.0	0.0	0.0	0.0	0.0	0.0
16	174	-11.6	398.2	0.1	0.0	-0.1	397.0
	175	11.6	1.1	-0.1	-0.0	0.0	-0.0
17	174	1.9	397.6	16.2	0.0	-32.5	396.0
	175	-1.9	1.6	-16.2	-0.0	-0.0	0.0
1	176	-3971.6	9577.4	0.6	2.9	127.5	0.0
	177	3971.6	9577.4	-0.6	-2.9	-134.6	0.0
2	176	-3298.7	7327.4	6.8	4.6	115.0	0.0
	177	3298.7	7327.4	-6.8	-4.6	-190.0	0.0
3	176	-5059.2	7327.4	-0.2	2.9	150.1	0.0
	177	5059.2	7327.4	0.2	-2.9	-147.5	0.0
4	176	-8648.2	7327.4	25.3	-0.0	-95.0	0.0

Comb.	Nodo	N [kg]	T1-2 [kg]	T1-3 [kg]	Mt [kgm]	M1-3 [kgm]	M1-2 [kgm]
	177	8648.2	7327.4	-25.3	0.0	-183.2	0.0
5	176	-1094.1	4598.0	0.8	0.9	27.6	0.0
	177	1094.1	4598.0	-0.8	-0.9	-18.9	0.0
6	176	-1461.5	4598.0	5.3	1.7	12.6	0.0
	177	1461.5	4598.0	-5.3	-1.7	-68.3	0.0
7	176	-2742.2	6598.0	0.1	1.9	89.2	0.0
	177	2742.2	6598.0	-0.1	-1.9	-90.3	0.0
8	176	-2293.6	5098.0	4.2	3.1	81.0	0.0
	177	2293.6	5098.0	-4.2	-3.1	-127.2	0.0
9	176	-3467.3	5098.0	-0.5	1.9	104.3	0.0
	177	3467.3	5098.0	0.5	-1.9	-98.9	0.0
10	176	-5859.9	5098.0	16.5	-0.0	-59.0	0.0
	177	5859.9	5098.0	-16.5	0.0	-122.7	0.0
11	176	-3630.7	5098.0	-5.9	0.1	102.7	0.0
	177	3630.7	5098.0	5.9	-0.1	-37.8	0.0
12	176	-3463.0	4598.0	-3.9	0.7	100.1	0.0
	177	3463.0	4598.0	3.9	-0.7	-56.9	0.0
13	176	-1813.9	4598.0	-4.0	0.1	60.5	0.0
	177	1813.9	4598.0	4.0	-0.1	-16.7	0.0
14	176	-4176.2	4598.0	-1.5	0.1	72.1	0.0
	177	4176.2	4598.0	1.5	-0.1	-56.0	0.0
15	176	-1568.6	6598.0	4.8	3.1	65.9	0.0
	177	1568.6	6598.0	-4.8	-3.1	-118.6	0.0
16	176	-1076.8	4598.0	1.3	1.0	24.7	0.0
	177	1076.8	4598.0	-1.3	-1.0	-19.7	0.0
17	176	-1482.1	4598.0	6.2	1.8	8.2	0.0
	177	1482.1	4598.0	-6.2	-1.8	-74.2	0.0
1	177	-803.9	1297.7	22.5	0.2	-73.9	0.0
	178	803.9	1297.7	-22.5	-0.2	-150.8	0.0
2	177	243.3	1297.7	26.2	-0.2	-47.8	0.0
	178	-243.3	1297.7	-26.2	0.2	-213.8	0.0
3	177	-1130.4	1297.7	26.5	-0.0	-100.4	0.0
	178	1130.4	1297.7	-26.5	0.0	-164.4	0.0
4	177	-4720.4	1297.7	20.4	0.1	-119.8	0.0
	178	4720.4	1297.7	-20.4	-0.1	-84.6	0.0
5	177	-505.4	998.2	3.6	0.9	-69.9	0.0
	178	505.4	998.2	-3.6	-0.9	-13.4	0.0
6	177	-502.3	998.2	15.4	1.3	-97.8	0.0
	178	502.3	998.2	-15.4	-1.3	-75.6	0.0
7	177	-641.5	998.2	15.2	0.1	-50.7	0.0
	178	641.5	998.2	-15.2	-0.1	-101.1	0.0
8	177	56.6	998.2	17.6	-0.1	-33.3	0.0
	178	-56.6	998.2	-17.6	0.1	-143.1	0.0
9	177	-859.2	998.2	17.9	0.0	-68.4	0.0
	178	859.2	998.2	-17.9	-0.0	-110.2	0.0
10	177	-3252.5	998.2	13.8	0.1	-81.3	0.0

Comb.	Nodo	N [kg]	T1-2 [kg]	T1-3 [kg]	Mt [kgm]	M1-3 [kgm]	M1-2 [kgm]
	178	3252.5	998.2	-13.8	-0.1	-57.0	0.0
11	177	-1731.8	998.2	12.3	0.2	-82.1	0.0
	178	1731.8	998.2	-12.3	-0.2	-40.9	0.0
12	177	-1402.1	998.2	13.7	0.1	-74.7	0.0
	178	1402.1	998.2	-13.7	-0.1	-62.6	0.0
13	177	-1158.5	998.2	5.6	0.2	-37.8	0.0
	178	1158.5	998.2	-5.6	-0.2	-18.2	0.0
14	177	-2064.0	998.2	13.0	0.2	-84.3	0.0
	178	2064.0	998.2	-13.0	-0.2	-45.3	0.0
15	177	274.3	998.2	15.0	0.0	-15.6	0.0
	178	-274.3	998.2	-15.0	-0.0	-134.1	0.0
16	177	-455.3	998.2	3.4	0.9	-22.2	0.0
	178	455.3	998.2	-3.4	-0.9	-12.8	0.0
17	177	-440.4	998.2	16.4	1.4	-89.3	0.0
	178	440.4	998.2	-16.4	-1.4	-80.5	0.0
1	178	806.0	648.8	26.5	-0.7	-73.9	0.0
	179	-806.0	648.8	-26.5	0.7	-58.9	0.0
2	178	1173.8	648.8	38.7	-1.6	-93.0	0.0
	179	-1173.8	648.8	-38.7	1.6	-100.4	0.0
3	178	904.2	648.8	27.3	-0.7	-78.9	0.0
	179	-904.2	648.8	-27.3	0.7	-57.4	0.0
4	178	-1423.2	648.8	26.2	0.1	-79.1	0.0
	179	1423.2	648.8	-26.2	-0.1	-51.9	0.0
5	178	520.4	499.1	4.3	0.6	-15.4	0.0
	179	-520.4	499.1	-4.3	-0.6	-4.7	0.0
6	178	360.3	499.1	44.7	-0.1	-96.3	0.0
	179	-360.3	499.1	-44.7	0.1	-127.2	0.0
7	178	529.5	499.1	18.0	-0.4	-51.1	0.0
	179	-529.5	499.1	-18.0	0.4	-38.7	0.0
8	178	774.7	499.1	26.0	-1.0	-63.8	0.0
	179	-774.7	499.1	-26.0	1.0	-66.4	0.0
9	178	595.0	499.1	18.4	-0.4	-54.5	0.0
	179	-595.0	499.1	-18.4	0.4	-37.7	0.0
10	178	-956.7	499.1	17.7	0.1	-54.6	0.0
	179	956.7	499.1	-17.7	-0.1	-34.1	0.0
11	178	187.3	499.1	5.4	0.4	-31.5	0.0
	179	-187.3	499.1	-5.4	-0.4	4.3	0.0
12	178	314.3	499.1	9.6	0.1	-38.3	0.0
	179	-314.3	499.1	-9.6	-0.1	-9.6	0.0
13	178	31.1	499.1	3.5	0.4	-21.2	0.0
	179	-31.1	499.1	-3.5	-0.4	3.4	0.0
14	178	-31.9	499.1	7.9	0.3	-36.4	0.0
	179	31.9	499.1	-7.9	-0.3	-3.1	0.0
15	178	709.1	499.1	25.6	-1.0	-60.5	0.0
	179	-709.1	499.1	-25.6	1.0	-67.4	0.0
16	178	571.2	499.1	4.4	0.6	-15.1	0.0

Comb.	Nodo	N [kg]	T1-2 [kg]	T1-3 [kg]	Mt [kgm]	M1-3 [kgm]	M1-2 [kgm]
	179	-571.2	499.1	-4.4	-0.6	-5.3	0.0
17	178	394.7	499.1	48.1	-0.2	-102.7	0.0
	179	-394.7	499.1	-48.1	0.2	-137.8	0.0
1	184	991.9	-1391.1	2399.6	-3443.0	-6236.9	-362.1
	185	-991.9	1391.3	-2399.6	3443.0	-362.0	-3463.8
2	184	2148.9	-463.1	4118.0	-5758.6	-10235.1	1358.0
	185	-2148.9	463.3	-4118.0	5758.6	-1089.4	-2631.8
3	184	1183.8	-1215.2	2391.4	-3473.6	-6229.5	434.5
	185	-1183.8	1215.5	-2391.4	3473.6	-346.9	-3776.8
4	184	-2716.9	418.8	-1497.1	-0.4	5642.4	4698.8
	185	2716.9	-418.6	1497.1	0.4	-1525.3	-3547.3
5	184	38.7	-2712.0	-2.5	300.8	-331.7	-6269.0
	185	-38.7	2712.1	2.5	-300.8	337.5	-1149.7
6	184	164.5	-1129.8	493.6	570.5	-2010.8	-1510.6
	185	-164.5	1129.9	-493.6	-570.5	719.4	-1469.4
7	184	628.7	-1040.8	1597.7	-2288.9	-4195.8	-414.4
	185	-628.7	1041.0	-1597.7	2288.9	-197.9	-2448.1
8	184	1400.1	-422.1	2743.3	-3832.7	-6861.3	732.4
	185	-1400.1	422.3	-2743.3	3832.7	-682.9	-1893.4
9	184	756.6	-923.6	1592.3	-2309.3	-4190.9	116.7
	185	-756.6	923.8	-1592.3	2309.3	-187.9	-2656.8
10	184	-1843.8	165.8	-1000.1	6.1	3723.7	2959.6
	185	1843.8	-165.7	1000.1	-6.1	-973.5	-2503.8
11	184	-294.4	-1533.9	-100.4	6.5	-213.6	-1251.5
	185	294.4	1534.1	100.4	-6.5	489.7	-2967.0
12	184	79.5	-1259.9	469.6	-765.4	-1544.0	-717.3
	185	-79.5	1260.1	-469.6	765.4	252.8	-2747.6
13	184	-362.4	-1312.0	-58.5	39.3	-248.5	-1647.8
	185	362.4	1312.1	58.5	-39.3	409.4	-1960.4
14	184	-569.2	-1142.3	-279.1	2.3	573.0	-271.8
	185	569.2	1142.5	279.1	-2.3	194.6	-2869.7
15	184	1272.1	-539.4	2748.8	-3812.3	-6866.2	201.3
	185	-1272.1	539.5	-2748.8	3812.3	-692.9	-1684.7
16	184	83.5	-2837.0	2.2	325.4	-339.7	-6659.2
	185	-83.5	2837.1	-2.2	-325.4	332.3	-1097.4
17	184	217.9	-1118.1	547.6	625.7	-2189.3	-1489.4
	185	-217.9	1118.2	-547.6	-625.7	754.4	-1439.7
1	185	998.3	2018.2	598.0	-638.4	366.5	3488.2
	186	-998.3	-2018.2	-598.0	638.4	-2010.9	2061.7
2	185	2153.2	1825.8	1112.4	-1077.1	1097.0	2644.8
	186	-2153.2	-1825.8	-1112.4	1077.1	-4156.2	2376.2
3	185	1207.1	2827.4	588.5	-656.6	351.5	3871.2
	186	-1207.1	-2827.3	-588.5	656.6	-1969.8	3904.0
4	185	-2569.8	1848.6	-1495.6	-48.6	1525.3	4207.5
	186	2569.8	-1848.5	1495.6	48.6	2587.6	876.0

Comb.	Nodo	N [kg]	T1-2 [kg]	T1-3 [kg]	Mt [kgm]	M1-3 [kgm]	M1-2 [kgm]
5	185	-3.2	-242.7	-3.2	294.5	-337.7	723.8
	186	3.2	242.7	3.2	-294.5	-72.9	-1481.2
6	185	149.6	146.7	469.7	560.4	-719.8	1252.0
	186	-149.6	-146.6	-469.7	-560.4	-789.4	-1129.9
7	185	631.6	1304.4	397.0	-421.0	200.9	2458.7
	186	-631.6	-1304.3	-397.0	421.0	-1292.6	1128.2
8	185	1401.6	1176.1	739.9	-713.4	687.9	1896.4
	186	-1401.6	-1176.1	-739.9	713.4	-2722.8	1337.8
9	185	770.8	1843.8	390.6	-433.1	190.9	2714.0
	186	-770.8	-1843.8	-390.6	433.1	-1265.2	2356.4
10	185	-1747.2	1191.3	-998.7	-27.8	973.5	2938.2
	186	1747.2	-1191.2	998.7	27.8	1773.1	337.7
11	185	-279.2	1710.8	-98.5	6.7	-489.7	3031.0
	186	279.2	-1710.7	98.5	-6.7	760.5	1673.5
12	185	94.1	1682.8	70.2	-139.6	-251.7	2808.3
	186	-94.1	-1682.7	-70.2	139.6	58.7	1819.3
13	185	-366.7	428.2	-55.7	27.8	-409.4	1943.8
	186	366.7	-428.2	55.7	-27.8	562.5	-766.4
14	185	-535.6	1685.8	-277.5	-2.5	-194.6	3016.7
	186	535.6	-1685.8	277.5	2.5	957.9	1619.3
15	185	1262.4	636.7	746.3	-701.3	697.9	1641.1
	186	-1262.4	-636.6	-746.3	701.3	-2750.2	109.6
16	185	41.1	-274.2	1.6	318.9	-332.5	638.9
	186	-41.1	274.2	-1.6	-318.9	-131.4	-1492.7
17	185	203.0	148.9	523.2	613.3	-754.9	1209.8
	186	-203.0	-148.8	-523.2	-613.3	-920.3	-1110.9
1	186	1620.3	-3386.9	1717.5	2798.4	-2142.3	-2243.8
	187	-1620.3	3386.9	-1717.5	-2798.4	-2586.4	-7081.4
2	186	3083.4	-3081.2	2282.6	4652.3	-2109.2	-2651.0
	187	-3083.4	3081.2	-2282.6	-4652.3	-4175.4	-5832.5
3	186	1830.4	-4273.1	1737.2	2799.1	-2231.0	-4097.9
	187	-1830.4	4273.1	-1737.2	-2799.1	-2552.1	-7667.4
4	186	-2247.7	-2368.7	1211.3	-60.4	-3410.9	-329.0
	187	2247.7	2368.7	-1211.3	60.4	75.9	-6192.8
5	186	232.5	-1442.6	424.6	292.9	-999.6	1075.8
	187	-232.5	1442.6	-424.6	-292.9	-120.2	-4963.0
6	186	399.2	-1249.4	721.1	574.5	-1423.0	1001.9
	187	-399.2	1249.4	-721.1	-574.5	-601.6	-4122.8
7	186	1057.4	-2331.2	1192.7	1866.6	-1538.2	-1254.2
	187	-1057.4	2331.2	-1192.7	-1866.6	-1745.9	-5164.4
8	186	2032.9	-2127.4	1569.5	3102.5	-1516.1	-1525.7
	187	-2032.9	2127.4	-1569.5	-3102.5	-2805.2	-4331.7
9	186	1197.5	-2922.0	1205.9	1867.0	-1597.3	-2490.3
	187	-1197.5	2922.0	-1205.9	-1867.0	-1723.0	-5555.0
10	186	-1521.2	-1652.4	855.3	-39.3	-2383.9	22.4
	187	1521.2	1652.4	-855.3	39.3	29.0	-4572.0

Comb.	Nodo	N [kg]	T1-2 [kg]	T1-3 [kg]	Mt [kgm]	M1-3 [kgm]	M1-2 [kgm]
11	186	-169.2	-2842.9	574.9	11.9	-1453.6	-1717.0
	187	169.2	2842.9	-574.9	-11.9	-129.4	-6110.4
12	186	307.8	-2783.7	770.6	630.0	-1462.2	-1893.4
	187	-307.8	2783.7	-770.6	-630.0	-659.6	-5771.1
13	186	-269.0	-1401.5	469.0	9.5	-1131.2	732.6
	187	269.0	1401.5	-469.0	-9.5	-160.2	-4591.5
14	186	-403.0	-2688.7	627.8	1.6	-1635.8	-1583.8
	187	403.0	2688.7	-627.8	-1.6	-92.7	-5819.2
15	186	1892.8	-1536.6	1556.3	3102.0	-1457.0	-289.6
	187	-1892.8	1536.6	-1556.3	-3102.0	-2828.1	-3941.1
16	186	279.9	-1475.1	423.9	318.1	-987.8	1054.0
	187	-279.9	1475.1	-423.9	-318.1	-114.6	-5023.7
17	186	468.4	-1265.9	753.2	627.2	-1471.8	974.0
	187	-468.4	1265.9	-753.2	-627.2	-644.8	-4110.9
1	187	1722.2	6855.0	-67.1	5633.1	2579.9	7489.9
	188	-1722.2	-6855.0	67.1	-5633.1	-2395.6	11338.5
2	187	3167.6	5848.8	-696.1	9416.1	4164.6	6168.3
	188	-3167.6	-5848.8	696.1	-9416.1	-2252.6	9896.4
3	187	1913.2	6529.9	-48.4	5642.4	2545.6	7999.9
	188	-1913.2	-6529.9	48.4	-5642.4	-2412.5	9935.7
4	187	-2013.0	9263.8	1213.9	-103.0	-75.8	7224.1
	188	2013.0	-9263.8	-1213.9	103.0	-3258.3	18220.5
5	187	281.0	3440.6	423.7	271.0	120.1	4991.5
	188	-281.0	-3440.6	-423.7	-271.0	-1299.9	4339.7
6	187	477.8	4129.0	700.6	572.2	601.1	4434.7
	188	-477.8	-4129.0	-700.6	-572.2	-2506.5	6495.5
7	187	1137.1	5139.3	3.6	3751.4	1741.6	5483.6
	188	-1137.1	-5139.3	-3.6	-3751.4	-1751.5	8632.4
8	187	2100.8	4468.5	-415.7	6273.4	2798.0	4602.5
	188	-2100.8	-4468.5	415.7	-6273.4	-1656.2	7671.0
9	187	1264.4	4922.6	16.1	3757.6	1718.7	5823.6
	188	-1264.4	-4922.6	-16.1	-3757.6	-1762.8	7697.2
10	187	-1353.0	6745.2	857.6	-72.6	-28.9	5306.4
	188	1353.0	-6745.2	-857.6	72.6	-2326.6	13220.4
11	187	-90.2	5390.8	578.9	-23.3	129.4	6428.4
	188	90.2	-5390.8	-578.9	23.3	-1719.4	8378.3
12	187	381.5	5115.2	376.6	1237.5	658.1	6067.5
	188	-381.5	-5115.2	-376.6	-1237.5	-1692.4	7982.2
13	187	-176.8	5044.1	473.6	-30.5	160.2	4960.5
	188	176.8	-5044.1	-473.6	30.5	-1461.1	8893.8
14	187	-309.2	5570.5	631.2	-31.7	92.8	6208.3
	188	309.2	-5570.5	-631.2	31.7	-1826.5	9092.0
15	187	1973.5	4685.2	-428.2	6267.2	2820.9	4262.5
	188	-1973.5	-4685.2	428.2	-6267.2	-1644.9	8606.2
16	187	325.0	3306.6	422.5	297.2	114.5	5021.6
	188	-325.0	-3306.6	-422.5	-297.2	-1296.9	3930.7

Comb.	Nodo	N [kg]	T1-2 [kg]	T1-3 [kg]	Mt [kgm]	M1-3 [kgm]	M1-2 [kgm]
17	187	545.5	4054.9	731.5	626.3	644.3	4416.3
	188	-545.5	-4054.9	-731.5	-626.3	-2632.5	6272.5
1	188	10559.9	7428.7	2310.4	-3222.7	-3863.6	15621.3
	189	-10559.9	-7428.7	-2310.4	3222.7	-1920.1	2975.2
2	188	11199.8	6774.0	3399.1	-5406.8	-5634.2	13924.1
	189	-11199.8	-6774.0	-3399.1	5406.8	-2875.0	3033.4
3	188	11383.3	8915.2	2412.2	-3260.5	-4040.2	19169.8
	189	-11383.3	-8915.2	-2412.2	3260.5	-1998.4	3147.8
4	188	7052.6	8099.5	601.6	21.7	-1198.9	20100.6
	189	-7052.6	-8099.5	-601.6	-21.7	-307.1	175.2
5	188	5286.0	2467.4	307.1	79.3	-591.8	3085.3
	189	-5286.0	-2467.4	-307.1	-79.3	-383.5	3095.8
6	188	5553.9	2895.4	635.9	-155.3	-1629.5	4979.2
	189	-5553.9	-2895.4	-635.9	155.3	-574.0	2277.9
7	188	7598.9	5287.1	1573.3	-2137.9	-2651.4	11083.9
	189	-7598.9	-5287.1	-1573.3	2137.9	-1287.1	2151.5
8	188	8025.5	4850.6	2299.1	-3594.0	-3831.8	9952.4
	189	-8025.5	-4850.6	-2299.1	3594.0	-1923.7	2190.2
9	188	8147.8	6278.1	1641.2	-2163.1	-2769.2	13449.6
	189	-8147.8	-6278.1	-1641.2	2163.1	-1339.3	2266.5
10	188	5260.7	5734.3	434.1	25.0	-875.0	14070.1
	189	-5260.7	-5734.3	-434.1	-25.0	-211.7	284.8
11	188	6937.7	6305.1	509.0	22.9	-948.4	13760.1
	189	-6937.7	-6305.1	-509.0	-22.9	-325.9	2023.6
12	188	7214.4	6156.6	876.8	-705.4	-1544.1	13348.4
	189	-7214.4	-6156.6	-876.8	705.4	-650.7	2063.5
13	188	5324.4	3910.4	344.4	65.7	-695.2	8187.7
	189	-5324.4	-3910.4	-344.4	-65.7	-167.0	1601.4
14	188	6661.4	6333.3	503.8	18.4	-952.8	14172.0
	189	-6661.4	-6333.3	-503.8	-18.4	-308.3	1682.4
15	188	7476.6	3859.6	2231.2	-3568.8	-3714.1	7586.7
	189	-7476.6	-3859.6	-2231.2	3568.8	-1871.5	2075.2
16	188	5330.3	2389.6	303.9	81.1	-576.3	2754.6
	189	-5330.3	-2389.6	-303.9	-81.1	-409.4	3232.3
17	188	5625.1	2854.7	666.2	-174.6	-1711.2	4806.8
	189	-5625.1	-2854.7	-666.2	174.6	-621.8	2349.0
1	189	10782.5	6221.7	806.3	-1153.8	1923.3	-2088.2
	190	-10782.5	-6221.7	-806.3	1153.8	-3939.1	17642.4
2	189	11386.3	5525.6	893.1	-1948.2	2880.3	-2289.3
	190	-11386.3	-5525.6	-893.1	1948.2	-5113.1	16103.2
3	189	11652.6	7754.8	907.8	-1183.6	2001.8	-2073.6
	190	-11652.6	-7754.8	-907.8	1183.6	-4271.3	21460.6
4	189	7395.7	6865.8	602.2	-12.4	307.3	1289.2
	190	-7395.7	-6865.8	-602.2	12.4	-1812.7	15875.4
5	189	5388.7	1399.4	298.9	239.5	383.6	-3052.3

Comb.	Nodo	N [kg]	T1-2 [kg]	T1-3 [kg]	Mt [kgm]	M1-3 [kgm]	M1-2 [kgm]
	190	-5388.7	-1399.4	-298.9	-239.5	-935.4	6612.6
6	189	5658.3	1837.5	608.0	369.3	574.3	-2057.5
	190	-5658.3	-1837.5	-608.0	-369.3	-1605.9	6860.2
7	189	7758.3	4333.7	570.4	-760.1	1289.2	-1516.6
	190	-7758.3	-4333.7	-570.4	760.1	-2715.3	12350.7
8	189	8160.9	3869.6	628.3	-1289.7	1927.2	-1650.6
	190	-8160.9	-3869.6	-628.3	1289.7	-3498.1	11324.6
9	189	8338.4	5355.7	638.1	-780.0	1341.5	-1506.8
	190	-8338.4	-5355.7	-638.1	780.0	-2936.8	14896.1
10	189	5500.5	4763.1	434.4	0.8	211.9	735.1
	190	-5500.5	-4763.1	-434.4	-0.8	-1297.8	11172.7
11	189	7143.3	5379.7	507.8	18.1	326.0	-1204.9
	190	-7143.3	-5379.7	-507.8	-18.1	-1595.6	14654.3
12	189	7410.3	5222.4	541.6	-247.1	651.5	-1283.1
	190	-7410.3	-5222.4	-541.6	247.1	-2005.5	14339.1
13	189	5453.1	2878.2	343.5	54.5	167.0	-1090.5
	190	-5453.1	-2878.2	-343.5	-54.5	-1025.8	8285.9
14	189	6878.2	5401.1	502.8	11.0	308.5	-806.0
	190	-6878.2	-5401.1	-502.8	-11.0	-1565.4	14308.7
15	189	7580.8	2847.5	560.7	-1269.8	1874.9	-1660.3
	190	-7580.8	-2847.5	-560.7	1269.8	-3276.6	8779.1
16	189	5434.0	1323.2	294.4	255.6	409.5	-3222.8
	190	-5434.0	-1323.2	-294.4	-255.6	-935.5	6596.2
17	189	5729.2	1798.1	634.9	395.5	622.1	-2147.3
	190	-5729.2	-1798.1	-634.9	-395.5	-1686.4	6863.6
1	190	10745.6	-5663.1	-699.7	1170.1	4153.3	-17366.0
	191	-10745.6	5663.1	699.7	-1170.1	-2408.8	3246.0
2	190	11299.3	-5070.9	-760.7	1888.4	5578.1	-15853.2
	191	-11299.3	5070.9	760.7	-1888.4	-3681.4	3209.7
3	190	11609.0	-7131.6	-861.8	1162.2	4527.1	-21160.7
	191	-11609.0	7131.6	861.8	-1162.2	-2378.3	3379.1
4	190	7589.2	-3558.9	-383.5	21.2	1674.6	-14901.3
	191	-7589.2	3558.9	383.5	-21.2	-718.4	6027.9
5	190	5454.4	-2627.5	-129.2	263.0	702.5	-6843.6
	191	-5454.4	2627.5	129.2	-263.0	-396.8	519.3
6	190	5677.7	-2195.2	116.0	399.7	1250.9	-6808.6
	191	-5677.7	2195.2	-116.0	-399.7	-906.0	2096.3
7	190	7739.7	-3885.0	-470.5	789.7	2836.3	-12139.0
	191	-7739.7	3885.0	470.5	-789.7	-1663.3	2452.4
8	190	8108.8	-3490.2	-511.1	1268.5	3786.2	-11130.4
	191	-8108.8	3490.2	511.1	-1268.5	-2511.8	2428.2
9	190	8315.3	-4864.0	-578.5	784.4	3085.5	-14668.7
	191	-8315.3	4864.0	578.5	-784.4	-1643.0	2541.1
10	190	5635.5	-2482.2	-259.7	23.7	1183.9	-10495.9
	191	-5635.5	2482.2	259.7	-23.7	-536.4	4307.0
11	190	7172.6	-4768.0	-447.8	64.9	1491.9	-14404.8

Comb.	Nodo	N [kg]	T1-2 [kg]	T1-3 [kg]	Mt [kgm]	M1-3 [kgm]	M1-2 [kgm]
	191	-7172.6	4768.0	447.8	-64.9	-375.5	2516.5
12	190	7422.6	-4647.1	-475.9	304.4	1985.6	-14097.9
	191	-7422.6	4647.1	475.9	-304.4	-799.1	2511.1
13	190	5492.4	-2314.7	-184.9	71.8	875.7	-8067.1
	191	-5492.4	2314.7	184.9	-71.8	-414.7	2295.9
14	190	6927.9	-4445.5	-425.6	55.5	1465.1	-13971.0
	191	-6927.9	4445.5	425.6	-55.5	-404.0	2886.9
15	190	7533.2	-2511.2	-403.0	1273.8	3537.0	-8600.7
	191	-7533.2	2511.2	403.0	-1273.8	-2532.1	2339.4
16	190	5488.2	-2703.5	-134.6	279.9	696.6	-6865.7
	191	-5488.2	2703.5	134.6	-279.9	-393.3	373.2
17	190	5742.4	-2235.1	142.0	427.4	1326.7	-6826.9
	191	-5742.4	2235.1	-142.0	-427.4	-947.1	2086.0
1	191	10548.3	-6773.6	-2210.1	3268.9	2405.7	-4046.9
	192	-10548.3	6773.6	2210.1	-3268.9	3126.9	-12909.7
2	191	11119.4	-6278.6	-3276.8	5375.7	3676.5	-3934.6
	192	-11119.4	6278.6	3276.8	-5375.7	4526.5	-11782.8
3	191	11370.2	-8171.7	-2373.1	3271.3	2375.1	-4347.4
	192	-11370.2	8171.7	2373.1	-3271.3	3565.5	-16109.1
4	191	7537.0	-4652.8	-385.7	44.3	718.2	-6157.4
	192	-7537.0	4652.8	385.7	-44.3	247.4	-5490.3
5	191	5336.8	-3527.7	-126.3	263.2	396.6	-1156.8
	192	-5336.8	3527.7	126.3	-263.2	-79.1	-7847.6
6	191	5587.0	-3114.1	119.7	402.1	905.5	-2404.7
	192	-5587.0	3114.1	-119.7	-402.1	-1031.3	-5975.0
7	191	7602.2	-4753.3	-1477.4	2189.1	1661.3	-3011.7
	192	-7602.2	4753.3	1477.4	-2189.1	2037.1	-8887.3
8	191	7982.9	-4423.3	-2188.5	3593.7	2508.4	-2936.9
	192	-7982.9	4423.3	2188.5	-3593.7	2970.2	-8136.0
9	191	8150.1	-5685.3	-1586.0	2190.7	1640.9	-3212.1
	192	-8150.1	5685.3	1586.0	-2190.7	2329.5	-11020.2
10	191	5594.7	-3339.4	-261.1	39.4	536.3	-4418.7
	192	-5594.7	3339.4	261.1	-39.4	117.5	-3941.0
11	191	7011.1	-5528.6	-449.3	82.1	375.3	-3177.7
	192	-7011.1	5528.6	449.3	-82.1	749.5	-10662.1
12	191	7264.6	-5436.0	-812.7	784.6	798.3	-3156.6
	192	-7264.6	5436.0	812.7	-784.6	1236.1	-10451.5
13	191	5402.6	-3197.2	-185.3	77.4	414.5	-2668.2
	192	-5402.6	3197.2	185.3	-77.4	49.3	-5335.4
14	191	6786.9	-5219.2	-427.2	73.7	403.9	-3452.9
	192	-6786.9	5219.2	427.2	-73.7	665.6	-9612.5
15	191	7435.0	-3491.2	-2079.9	3592.1	2528.8	-2736.5
	192	-7435.0	3491.2	2079.9	-3592.1	2677.8	-6003.1
16	191	5367.3	-3605.5	-130.7	279.8	393.0	-1039.3
	192	-5367.3	3605.5	130.7	-279.8	-62.9	-8175.9
17	191	5650.4	-3156.0	148.5	429.7	946.6	-2394.7

Comb.	Nodo	N [kg]	T1-2 [kg]	T1-3 [kg]	Mt [kgm]	M1-3 [kgm]	M1-2 [kgm]
	192	-5650.4	3156.0	-148.5	-429.7	-1112.9	-6144.4
1	192	378.6	-9949.3	-815.4	-3568.4	2544.7	-19236.0
	193	-378.6	9949.3	815.4	3568.4	-98.4	-10611.9
2	192	553.2	-9122.5	-1158.0	-6028.3	3449.3	-19443.3
	193	-553.2	9122.5	1158.0	6028.3	24.8	-7924.2
3	192	376.7	-10845.0	-769.9	-3688.0	2170.1	-18888.1
	193	-376.7	10845.0	769.9	3688.0	139.5	-13646.9
4	192	169.9	-7172.7	-280.5	382.7	1295.4	-10723.5
	193	-169.9	7172.7	280.5	-382.7	-453.8	-10794.5
5	192	-61.5	-7383.5	-369.7	-724.0	1755.0	-18347.9
	193	61.5	7383.5	369.7	724.0	-727.8	-4341.5
6	192	104.2	-6043.0	-424.7	-1790.5	1921.5	-16075.8
	193	-104.2	6043.0	424.7	1790.5	-723.3	-3402.9
7	192	261.6	-7312.6	-578.0	-2326.2	1894.7	-14527.1
	193	-261.6	7312.6	578.0	2326.2	-160.6	-7410.8
8	192	378.0	-6761.4	-806.4	-3966.1	2497.8	-14665.3
	193	-378.0	6761.4	806.4	3966.1	-78.4	-5619.0
9	192	260.4	-7909.8	-547.7	-2405.9	1645.0	-14295.2
	193	-260.4	7909.8	547.7	2405.9	-2.0	-9434.1
10	192	122.5	-5461.6	-221.4	307.9	1061.8	-8852.1
	193	-122.5	5461.6	221.4	-307.9	-397.6	-7532.5
11	192	80.9	-8108.1	-203.1	100.8	804.0	-13630.6
	193	-80.9	8108.1	203.1	-100.8	-194.7	-10693.8
12	192	139.6	-7902.4	-317.5	-724.4	1098.5	-13750.5
	193	-139.6	7902.4	317.5	724.4	-145.9	-9956.6
13	192	76.6	-6342.7	-249.1	288.7	1285.4	-13412.2
	193	-76.6	6342.7	249.1	-288.7	-538.0	-5615.8
14	192	88.5	-7642.4	-200.5	130.4	811.3	-12587.9
	193	-88.5	7642.4	200.5	-130.4	-209.7	-10339.3
15	192	379.3	-6164.3	-836.8	-3886.3	2747.5	-14897.2
	193	-379.3	6164.3	836.8	3886.3	-237.1	-3595.7
16	192	-74.5	-7508.1	-384.2	-814.4	1793.7	-18776.5
	193	74.5	7508.1	384.2	814.4	-744.2	-4334.1
17	192	107.5	-6051.1	-448.6	-1979.2	1990.7	-16314.9
	193	-107.5	6051.1	448.6	1979.2	-737.2	-3312.3
1	193	271.6	4983.7	-1077.5	-3567.6	98.0	10312.8
	194	-271.6	-4983.7	1077.5	3567.6	2057.0	-345.5
2	193	424.2	3542.6	-1510.1	-6027.4	-25.5	7564.0
	194	-424.2	-3542.6	1510.1	6027.4	3045.6	-478.7
3	193	289.0	6652.4	-1032.6	-3687.4	-139.9	13400.2
	194	-289.0	-6652.4	1032.6	3687.4	2205.2	-95.3
4	193	6.7	5311.2	-398.2	383.2	454.3	10597.3
	194	-6.7	-5311.2	398.2	-383.2	342.1	25.0
5	193	-103.4	1505.2	-501.7	-723.4	727.7	4091.3
	194	103.4	-1505.2	501.7	723.4	45.3	-800.5

Comb.	Nodo	N [kg]	T1-2 [kg]	T1-3 [kg]	Mt [kgm]	M1-3 [kgm]	M1-2 [kgm]
6	193	25.9	1201.7	-602.6	-1789.9	723.3	3135.9
	194	-25.9	-1201.7	602.6	1789.9	474.6	-670.6
7	193	178.5	3429.9	-764.6	-2325.6	160.4	7178.4
	194	-178.5	-3429.9	764.6	2325.6	1368.9	-318.6
8	193	280.2	2469.2	-1053.0	-3965.4	78.0	5345.9
	194	-280.2	-2469.2	1053.0	3965.4	2028.0	-407.4
9	193	190.1	4542.4	-734.7	-2405.5	1.8	9236.7
	194	-190.1	-4542.4	734.7	2405.5	1467.6	-151.8
10	193	1.9	3648.3	-311.7	308.3	397.9	7368.1
	194	-1.9	-3648.3	311.7	-308.3	225.6	-71.6
11	193	28.9	5224.3	-298.3	101.1	194.7	10546.8
	194	-28.9	-5224.3	298.3	-101.1	401.9	-98.2
12	193	80.7	4828.3	-442.9	-724.0	145.8	9790.4
	194	-80.7	-4828.3	442.9	724.0	740.0	-133.8
13	193	-0.7	2465.8	-341.2	289.3	538.0	5399.3
	194	0.7	-2465.8	341.2	-289.3	144.4	-467.7
14	193	25.1	5064.1	-294.6	130.8	209.8	10194.8
	194	-25.1	-5064.1	294.6	-130.8	379.5	-66.6
15	193	268.7	1356.7	-1082.9	-3885.5	236.7	3287.6
	194	-268.7	-1356.7	1082.9	3885.5	1929.2	-574.1
16	193	-114.7	1478.5	-517.6	-813.7	744.1	4081.2
	194	114.7	-1478.5	517.6	813.7	34.6	-821.8
17	193	29.0	1147.2	-630.1	-1978.5	737.2	3042.2
	194	-29.0	-1147.2	630.1	1978.5	518.2	-681.1
1	205	3575.5	7024.3	2752.3	1787.2	-6941.5	18944.8
	206	-3575.5	-7024.0	-2752.3	-1787.2	-8186.8	19665.0
2	205	2635.7	6206.9	4112.4	2886.6	-11077.0	16931.5
	206	-2635.7	-6206.7	-4112.4	-2886.6	-11527.8	17185.4
3	205	4657.8	8833.5	2754.1	1771.6	-6676.7	23349.6
	206	-4657.8	-8833.1	-2754.1	-1771.6	-8461.7	25204.4
4	205	1217.5	7375.4	2415.8	11.4	-8978.7	24092.8
	206	-1217.5	-7375.1	-2415.8	-11.4	-4300.2	16446.6
5	205	1519.3	1617.6	398.5	539.9	-653.2	3079.1
	206	-1519.3	-1617.6	-398.5	-539.9	-1514.5	5876.5
6	205	1130.4	2346.7	970.7	959.8	-2794.9	7214.5
	206	-1130.4	-2346.6	-970.7	-959.8	-2650.8	5880.9
7	205	2475.9	4830.5	1878.0	1205.5	-4733.4	13127.8
	206	-2475.9	-4830.3	-1878.0	-1205.5	-5589.3	13423.3
8	205	1849.4	4285.5	2784.8	1938.5	-7490.4	11785.6
	206	-1849.4	-4285.4	-2784.8	-1938.5	-7816.6	11770.3
9	205	3197.4	6036.6	1879.2	1195.1	-4556.9	16064.3
	206	-3197.4	-6036.3	-1879.2	-1195.1	-5772.5	17116.2
10	205	903.9	5064.5	1653.7	21.7	-6091.5	16559.7
	206	-903.9	-5064.3	-1653.7	-21.7	-2998.2	11277.8
11	205	3622.3	5996.4	469.4	92.8	-426.1	15899.5
	206	-3622.3	-5996.2	-469.4	-92.8	-2154.0	17060.4

Comb.	Nodo	N [kg]	T1-2 [kg]	T1-3 [kg]	Mt [kgm]	M1-3 [kgm]	M1-2 [kgm]
12	205	3366.3	5819.2	928.3	459.6	-1804.1	15470.4
	206	-3366.3	-5819.0	-928.3	-459.6	-3298.5	16515.6
13	205	1804.2	2961.4	403.5	105.8	-714.7	8393.7
	206	-1804.2	-2961.3	-403.5	-105.8	-1503.1	7883.8
14	205	3177.2	5975.0	702.1	76.3	-1524.3	16425.2
	206	-3177.2	-5974.8	-702.1	-76.3	-2334.8	16417.1
15	205	1127.8	3079.4	2783.6	1948.9	-7666.9	8849.1
	206	-1127.8	-3079.3	-2783.6	-1948.9	-7633.4	8077.3
16	205	1540.7	1562.0	402.5	579.2	-654.5	2765.7
	206	-1540.7	-1561.9	-402.5	-579.2	-1531.8	5889.4
17	205	1107.8	2353.6	1031.0	1042.5	-3003.6	7255.8
	206	-1107.8	-2353.5	-1031.0	-1042.5	-2780.8	5893.0
1	206	2989.2	-5947.0	-418.8	1776.9	4288.6	-19643.4
	207	-2989.2	5947.0	418.8	-1776.9	-1984.1	-13084.8
2	206	1737.5	-5007.1	-476.3	2870.4	5456.9	-17249.7
	207	-1737.5	5007.1	476.3	-2870.4	-2835.8	-10306.0
3	206	4068.0	-7882.8	-448.9	1761.2	4562.6	-25180.0
	207	-4068.0	7882.8	448.9	-1761.2	-2092.4	-18201.7
4	206	1075.7	-3911.8	-293.4	8.5	3183.1	-16263.5
	207	-1075.7	3911.8	293.4	-8.5	-1568.6	-5264.4
5	206	1582.3	-2149.3	-120.2	537.8	1029.6	-5831.0
	207	-1582.3	2149.3	120.2	-537.8	-299.7	-6096.5
6	206	1018.0	-1418.2	238.3	955.6	583.0	-5867.8
	207	-1018.0	1418.2	-238.3	-955.6	-1971.7	-2251.2
7	206	2077.0	-4017.0	-284.9	1198.5	2941.7	-13396.1
	207	-2077.0	4017.0	284.9	-1198.5	-1373.6	-8710.9
8	206	1242.5	-3390.4	-323.3	1927.6	3720.5	-11800.4
	207	-1242.5	3390.4	323.3	-1927.6	-1941.4	-6858.3
9	206	2796.2	-5307.6	-305.0	1188.1	3124.3	-17087.2
	207	-2796.2	5307.6	305.0	-1188.1	-1445.8	-12122.1
10	206	801.3	-2660.2	-201.3	19.6	2204.7	-11142.8
	207	-801.3	2660.2	201.3	-19.6	-1096.6	-3497.2
11	206	3539.2	-5405.6	-205.3	91.7	1706.3	-16949.3
	207	-3539.2	5405.6	205.3	-91.7	-576.6	-12799.8
12	206	3178.5	-5185.9	-229.1	456.5	2123.4	-16432.7
	207	-3178.5	5185.9	229.1	-456.5	-862.4	-12107.0
13	206	1732.8	-2255.8	-118.8	104.8	1092.1	-7780.7
	207	-1732.8	2255.8	118.8	-104.8	-438.5	-4633.6
14	206	3090.2	-5039.8	-204.8	74.9	1820.3	-16301.2
	207	-3090.2	5039.8	204.8	-74.9	-693.4	-11434.8
15	206	523.3	-2099.9	-303.2	1938.0	3537.9	-8109.3
	207	-523.3	2099.9	303.2	-1938.0	-1869.2	-3447.0
16	206	1599.5	-2205.2	-120.4	576.9	1048.6	-5848.7
	207	-1599.5	2205.2	120.4	-576.9	-300.1	-6394.2
17	206	980.3	-1411.3	278.7	1037.9	531.4	-5888.2
	207	-980.3	1411.3	-278.7	-1037.9	-2148.9	-2218.0

Comb.	Nodo	N [kg]	T1-2 [kg]	T1-3 [kg]	Mt [kgm]	M1-3 [kgm]	M1-2 [kgm]
1	207	1011.2	3825.3	1248.2	-2234.3	-1478.2	8646.6
	208	-1011.2	-3825.3	-1248.2	2234.3	-1646.5	929.3
2	207	-251.7	3482.8	2468.6	-3608.8	-3060.3	7203.1
	208	251.7	-3482.8	-2468.6	3608.8	-3119.4	1515.6
3	207	1453.3	4870.9	1136.7	-2278.9	-1369.0	11548.7
	208	-1453.3	-4870.9	-1136.7	2278.9	-1476.6	644.9
4	207	354.8	3185.6	-279.8	-232.4	-24.0	12100.7
	208	-354.8	-3185.6	279.8	232.4	724.4	-4126.1
5	207	1358.9	1586.2	-207.1	261.8	475.5	-138.8
	208	-1358.9	-1586.2	207.1	-261.8	-329.4	3851.3
6	207	756.8	1203.7	201.9	496.3	-868.3	928.3
	208	-756.8	-1203.7	-201.9	-496.3	-720.4	2692.2
7	207	788.9	2646.1	809.6	-1492.1	-920.8	5908.7
	208	-788.9	-2646.1	-809.6	1492.1	-1105.8	715.4
8	207	-53.1	2417.8	1623.1	-2408.4	-1975.5	4946.3
	208	53.1	-2417.8	-1623.1	2408.4	-2087.7	1106.2
9	207	1083.6	3343.2	735.2	-1521.8	-848.0	7843.4
	208	-1083.6	-3343.2	-735.2	1521.8	-992.5	525.7
10	207	351.3	2219.6	-209.1	-157.5	48.7	8211.4
	208	-351.3	-2219.6	209.1	157.5	474.8	-2654.9
11	207	2116.0	3281.4	-442.1	-129.6	707.5	8172.1
	208	-2116.0	-3281.4	442.1	129.6	399.4	42.3
12	207	1720.6	3212.2	-40.1	-589.7	183.0	7814.8
	208	-1720.6	-3212.2	40.1	589.7	-82.6	226.3
13	207	1347.3	1645.0	-267.9	-59.2	556.7	3639.6
	208	-1347.3	-1645.0	267.9	59.2	113.8	478.3
14	207	1801.5	3172.5	-406.6	-139.5	587.9	8467.8
	208	-1801.5	-3172.5	406.6	139.5	429.9	-525.9
15	207	-347.8	1720.7	1697.5	-2378.7	-2048.3	3011.6
	208	347.8	-1720.7	-1697.5	2378.7	-2201.0	1295.9
16	207	1367.8	1745.0	-208.8	289.4	486.7	-405.9
	208	-1367.8	-1745.0	208.8	-289.4	-369.2	4117.2
17	207	702.7	1571.9	240.9	543.1	-981.5	776.5
	208	-702.7	-1571.9	-240.9	-543.1	-803.9	2864.4
1	208	1051.7	4209.9	401.2	-955.7	1647.5	-722.6
	209	-1051.7	-4209.9	-401.2	955.7	-2650.3	11247.3
2	208	-217.5	3722.8	1066.4	-1527.5	3120.8	-1339.0
	209	217.5	-3722.8	-1066.4	1527.5	-5786.9	10645.9
3	208	1507.1	5362.9	287.1	-990.4	1477.7	-370.9
	209	-1507.1	-5362.9	-287.1	990.4	-2195.4	13778.1
4	208	461.7	5676.6	-288.5	-193.3	-724.1	4725.9
	209	-461.7	-5676.6	288.5	193.3	1445.4	9465.7
5	208	1359.8	-101.7	-215.1	300.7	329.6	-4049.2
	209	-1359.8	101.7	215.1	-300.7	33.7	3909.7
6	208	768.6	392.0	183.4	528.2	720.6	-2782.7

Comb.	Nodo	N [kg]	T1-2 [kg]	T1-3 [kg]	Mt [kgm]	M1-3 [kgm]	M1-2 [kgm]
	209	-768.6	-392.0	-183.4	-528.2	-595.4	4005.4
7	208	816.7	2890.5	244.5	-637.4	1106.4	-573.3
	209	-816.7	-2890.5	-244.5	637.4	-1717.8	7799.5
8	208	-29.5	2565.8	688.1	-1018.7	2088.7	-984.2
	209	29.5	-2565.8	-688.1	1018.7	-3808.9	7398.6
9	208	1120.3	3659.2	168.5	-660.6	993.2	-338.8
	209	-1120.3	-3659.2	-168.5	660.6	-1414.5	9486.7
10	208	423.3	3868.4	-215.2	-129.2	-474.6	3059.1
	209	-423.3	-3868.4	215.2	129.2	1012.7	6611.8
11	208	2154.1	3637.3	-452.3	-78.4	-399.2	150.3
	209	-2154.1	-3637.3	452.3	78.4	1529.8	8942.9
12	208	1757.2	3531.5	-235.4	-270.2	83.0	-41.0
	209	-1757.2	-3531.5	235.4	270.2	505.7	8869.7
13	208	1364.8	1751.4	-273.3	-28.0	-113.7	-388.9
	209	-1364.8	-1751.4	273.3	28.0	796.9	4767.4
14	208	1847.7	3792.0	-416.1	-92.3	-429.7	767.7
	209	-1847.7	-3792.0	416.1	92.3	1470.0	8712.3
15	208	-333.1	1797.1	764.1	-995.5	2201.9	-1218.7
	209	333.1	-1797.1	-764.1	995.5	-4112.1	5711.4
16	208	1367.8	-217.2	-217.6	329.3	369.3	-4337.7
	209	-1367.8	217.2	217.6	-329.3	-34.9	3921.4
17	208	714.3	317.1	220.3	575.0	804.1	-2967.9
	209	-714.3	-317.1	-220.3	-575.0	-738.5	4029.6
1	209	1086.2	-4869.0	-636.3	383.5	3161.8	-11533.6
	210	-1086.2	4869.0	636.3	-383.5	-1575.4	-606.5
2	209	-143.1	-4473.7	-1493.9	611.7	6576.0	-10921.6
	210	143.1	4473.7	1493.9	-611.7	-2851.1	-232.7
3	209	1551.8	-5940.5	-495.2	373.4	2804.0	-14068.7
	210	-1551.8	5940.5	495.2	-373.4	-1569.2	-742.9
4	209	527.6	-2169.6	670.1	-96.6	-1444.4	-9180.2
	210	-527.6	2169.6	-670.1	96.6	-226.5	3770.8
5	209	1482.1	-3182.2	-40.6	351.2	-636.0	-4416.1
	210	-1482.1	3182.2	40.6	-351.2	284.5	-2834.9
6	209	771.0	-2671.9	-183.9	570.0	182.9	-4330.7
	210	-771.0	2671.9	183.9	-570.0	-450.9	-42.3
7	209	835.5	-3389.7	-411.1	259.7	2043.3	-8014.3
	210	-835.5	3389.7	411.1	-259.7	-1018.3	-437.5
8	209	16.0	-3126.2	-982.9	411.8	4319.4	-7606.3
	210	-16.0	3126.2	982.9	-411.8	-1868.8	-188.3
9	209	1146.0	-4104.1	-317.1	252.9	1804.7	-9704.4
	210	-1146.0	4104.1	317.1	-252.9	-1014.2	-528.5
10	209	463.2	-1590.1	459.9	-60.4	-1027.5	-6445.3
	210	-463.2	1590.1	-459.9	60.4	-119.1	2480.6
11	209	2139.0	-3987.0	475.2	22.7	-1442.8	-9159.9
	210	-2139.0	3987.0	-475.2	-22.7	258.0	-781.0
12	209	1755.5	-3912.2	196.6	99.0	-323.3	-9084.4

Comb.	Nodo	N [kg]	T1-2 [kg]	T1-3 [kg]	Mt [kgm]	M1-3 [kgm]	M1-2 [kgm]
	210	-1755.5	3912.2	-196.6	-99.0	-166.9	-669.9
13	209	1337.8	-2183.7	240.5	30.8	-846.4	-4965.3
	210	-1337.8	2183.7	-240.5	-30.8	246.8	-479.3
14	209	1844.9	-3604.9	485.1	4.5	-1392.7	-8852.2
	210	-1844.9	3604.9	-485.1	-4.5	183.1	-136.1
15	209	-294.4	-2411.9	-1076.9	418.6	4558.0	-5916.2
	210	294.4	2411.9	1076.9	-418.6	-1873.0	-97.4
16	209	1506.5	-3298.4	-69.8	379.7	-631.0	-4452.8
	210	-1506.5	3298.4	69.8	-379.7	286.4	-3033.2
17	209	721.4	-2746.1	-228.4	615.7	304.1	-4363.4
	210	-721.4	2746.1	228.4	-615.7	-515.4	-12.0
1	210	1014.5	-3843.6	-1493.3	1654.2	1574.7	243.1
	211	-1014.5	3843.6	1493.3	-1654.2	2163.5	-9865.0
2	210	-203.9	-3608.2	-2913.1	2684.5	2850.1	-77.9
	211	203.9	3608.2	2913.1	-2684.5	4442.3	-8954.6
3	210	1466.3	-4478.9	-1355.1	1654.3	1568.4	309.6
	211	-1466.3	4478.9	1355.1	-1654.3	1823.9	-11521.9
4	210	531.2	-3138.5	656.7	-39.2	226.4	-3692.7
	211	-531.2	3138.5	-656.7	39.2	-1870.4	-4164.1
5	210	1433.6	-1425.0	-47.1	368.5	-284.7	2433.0
	211	-1433.6	1425.0	47.1	-368.5	-40.5	-8271.4
6	210	736.3	-1768.2	-196.3	580.3	450.6	-105.1
	211	-736.3	1768.2	196.3	-580.3	-1309.1	-6956.6
7	210	784.5	-2741.0	-982.9	1109.7	1017.9	179.3
	211	-784.5	2741.0	982.9	-1109.7	1442.7	-7041.0
8	210	-27.7	-2584.1	-1929.5	1796.5	1868.1	-34.7
	211	27.7	2584.1	1929.5	-1796.5	2962.0	-6434.0
9	210	1085.7	-3164.6	-890.8	1109.7	1013.7	223.6
	211	-1085.7	3164.6	890.8	-1109.7	1216.3	-8145.6
10	210	462.3	-2271.0	450.4	-19.3	119.0	-2444.6
	211	-462.3	2271.0	-450.4	19.3	-1246.5	-3240.4
11	210	2075.2	-3088.0	464.6	72.3	-258.2	460.6
	211	-2075.2	3088.0	-464.6	-72.3	-904.9	-8190.9
12	210	1694.5	-3044.2	-1.5	416.5	166.6	362.9
	211	-1694.5	3044.2	1.5	-416.5	-162.8	-7983.6
13	210	1298.3	-2008.2	234.3	63.0	-246.9	281.3
	211	-1298.3	2008.2	-234.3	-63.0	-339.6	-5308.6
14	210	1792.5	-2981.6	474.5	53.3	-183.2	-119.0
	211	-1792.5	2981.6	-474.5	-53.3	-1004.5	-7344.9
15	210	-328.9	-2160.5	-2021.6	1796.5	1872.3	-79.1
	211	328.9	2160.5	2021.6	-1796.5	3188.4	-5329.4
16	210	1457.3	-1370.3	-76.9	396.1	-286.6	2611.1
	211	-1457.3	1370.3	76.9	-396.1	-15.3	-8604.2
17	210	686.8	-1764.0	-243.0	624.2	515.1	-133.8
	211	-686.8	1764.0	243.0	-624.2	-1405.5	-7161.1

Comb.	Nodo	N [kg]	T1-2 [kg]	T1-3 [kg]	Mt [kgm]	M1-3 [kgm]	M1-2 [kgm]
1	211	-678.9	716.2	-146.7	-1629.0	536.3	2712.1
	212	678.9	-716.2	146.7	1629.0	-169.7	-921.6
2	211	-1111.9	1017.5	-371.5	-2864.6	1347.5	3329.2
	212	1111.9	-1017.5	371.5	2864.6	-418.8	-785.5
3	211	-711.5	592.5	-203.1	-1647.4	664.4	2632.5
	212	711.5	-592.5	203.1	1647.4	-156.7	-1151.2
4	211	-513.0	3683.4	370.3	74.0	-900.5	9192.8
	212	513.0	-3683.4	-370.3	-74.0	-25.1	15.6
5	211	23.6	-1355.4	103.7	202.6	-764.6	-2644.1
	212	-23.6	1355.4	-103.7	-202.6	120.5	-746.5
6	211	-196.9	623.7	-42.7	-172.1	-264.6	1730.4
	212	196.9	-623.7	42.7	172.1	-302.3	-165.5
7	211	-444.2	543.5	-59.4	-1056.2	247.1	1997.8
	212	444.2	-543.5	59.4	1056.2	-98.6	-639.0
8	211	-732.9	744.4	-209.3	-1879.9	787.9	2409.2
	212	732.9	-744.4	209.3	1879.9	-264.6	-548.2
9	211	-465.9	461.1	-97.0	-1068.4	332.5	1944.7
	212	465.9	-461.1	97.0	1068.4	-89.9	-792.0
10	211	-333.6	2521.7	285.2	79.2	-710.8	6318.3
	212	333.6	-2521.7	-285.2	-79.2	-2.2	-14.1
11	211	-19.5	203.7	149.6	175.5	-524.7	1324.9
	212	19.5	-203.7	-149.6	-175.5	150.7	-815.6
12	211	-165.3	299.3	72.2	-237.3	-249.2	1530.9
	212	165.3	-299.3	-72.2	237.3	68.6	-782.7
13	211	32.7	392.3	237.8	205.8	-720.5	1406.3
	212	-32.7	-392.3	-237.8	-205.8	126.1	-425.5
14	211	-85.4	654.7	171.1	154.5	-548.9	2312.7
	212	85.4	-654.7	-171.1	-154.5	121.1	-675.9
15	211	-711.1	826.9	-171.7	-1867.6	702.5	2462.3
	212	711.1	-826.9	171.7	1867.6	-273.3	-395.1
16	211	-103.6	-1515.9	89.2	200.5	-754.1	-3011.5
	212	103.6	1515.9	-89.2	-200.5	122.8	-780.9
17	211	-259.0	635.7	-74.8	-212.2	-204.7	1747.9
	212	259.0	-635.7	74.8	212.2	-336.7	-152.0
1	212	-674.1	880.6	-977.3	-359.6	170.0	944.7
	213	674.1	-880.6	977.3	359.6	2273.3	1256.7
2	212	-1099.4	1121.1	-1756.4	-751.4	419.4	843.6
	213	1099.4	-1121.1	1756.4	751.4	3971.6	1959.1
3	212	-709.6	859.0	-1034.0	-382.7	157.1	1160.1
	213	709.6	-859.0	1034.0	382.7	2427.8	987.3
4	212	-450.2	3499.0	368.5	88.8	25.2	349.8
	213	450.2	-3499.0	-368.5	-88.8	-946.5	8397.8
5	212	-86.3	-1213.1	106.1	199.5	-120.7	552.4
	213	86.3	1213.1	-106.1	-199.5	49.1	-3576.9
6	212	-224.3	659.4	-39.8	-210.6	302.1	196.2
	213	224.3	-659.4	39.8	210.6	578.2	1448.4

Comb.	Nodo	N [kg]	T1-2 [kg]	T1-3 [kg]	Mt [kgm]	M1-3 [kgm]	M1-2 [kgm]
7	212	-440.7	639.9	-613.3	-207.8	98.8	656.4
	213	440.7	-639.9	613.3	207.8	1434.5	943.3
8	212	-724.2	800.2	-1132.7	-469.0	265.0	589.1
	213	724.2	-800.2	1132.7	469.0	2566.7	1411.5
9	212	-464.4	625.5	-651.1	-223.2	90.2	800.0
	213	464.4	-625.5	651.1	223.2	1537.5	763.6
10	212	-291.4	2385.5	283.9	91.2	2.2	259.8
	213	291.4	-2385.5	-283.9	-91.2	-712.0	5703.9
11	212	-24.4	380.4	149.4	179.0	-150.8	794.6
	213	24.4	-380.4	-149.4	-179.0	-222.7	156.4
12	212	-167.8	461.1	-112.7	47.2	-68.6	772.7
	213	167.8	-461.1	112.7	-47.2	350.3	380.0
13	212	32.4	397.6	237.4	216.9	-126.2	427.6
	213	-32.4	-397.6	-237.4	-216.9	-467.3	566.5
14	212	-81.2	778.1	170.7	159.2	-121.2	706.9
	213	81.2	-778.1	-170.7	-159.2	-305.4	1238.5
15	212	-700.5	814.6	-1094.9	-453.6	273.7	445.5
	213	700.5	-814.6	1094.9	453.6	2463.7	1591.1
16	212	-100.5	-1364.1	91.7	195.7	-123.0	569.2
	213	100.5	1364.1	-91.7	-195.7	105.3	-3968.7
17	212	-252.0	676.1	-72.5	-255.8	336.5	184.1
	213	252.0	-676.1	72.5	255.8	688.3	1501.6
1	22	0.9	6056.4	70.3	-0.0	-5.0	2967.5
	25	-0.9	-5812.7	-70.3	0.0	-30.2	-0.2
2	22	0.6	5493.9	86.9	-0.0	-4.1	2686.3
	25	-0.6	-5250.2	-86.9	0.0	-39.3	-0.3
3	22	-0.1	5493.9	53.5	-0.0	-2.0	2686.3
	25	0.1	-5250.2	-53.5	0.0	-24.8	-0.2
4	22	32.7	5493.9	-2933.6	-0.0	1713.6	2686.0
	25	-32.7	-5250.2	2933.6	0.0	-246.9	-0.0
5	22	-54.5	3982.6	-62.4	-0.0	39.9	1944.5
	25	54.5	-3795.1	62.4	0.0	-3.5	-0.3
6	22	-111.2	4008.9	139.5	-0.0	-68.2	1957.6
	25	111.2	-3821.4	-139.5	0.0	4.3	-0.5
7	22	0.8	4466.5	49.9	-0.0	-3.3	2186.5
	25	-0.8	-4279.0	-49.9	0.0	-21.7	-0.2
8	22	0.6	4091.5	61.0	-0.0	-2.7	1999.1
	25	-0.6	-3904.0	-61.0	0.0	-27.7	-0.2
9	22	0.1	4091.5	38.7	-0.0	-1.3	1999.0
	25	-0.1	-3904.0	-38.7	0.0	-18.1	-0.2
10	22	21.9	4091.5	-1952.7	-0.0	1142.4	1998.9
	25	-21.9	-3904.0	1952.7	0.0	-166.1	-0.0
11	22	0.2	4091.5	16.6	-0.0	-0.5	1998.9
	25	-0.2	-3904.0	-16.6	0.0	-7.7	-0.1
12	22	0.2	3966.5	22.7	-0.0	-0.4	1936.5
	25	-0.2	-3779.0	-22.7	0.0	-10.9	-0.1

Comb.	Nodo	N [kg]	T1-2 [kg]	T1-3 [kg]	Mt [kgm]	M1-3 [kgm]	M1-2 [kgm]
13	22	1.2	3966.5	27.2	-0.0	-1.7	1936.4
	25	-1.2	-3779.0	-27.2	0.0	-11.9	-0.1
14	22	4.4	3966.5	-380.0	-0.0	228.6	1936.4
	25	-4.4	-3779.0	380.0	0.0	-38.6	-0.1
15	22	1.2	4466.5	72.1	-0.0	-4.7	2186.6
	25	-1.2	-4279.0	-72.1	0.0	-31.3	-0.2
16	22	-56.3	3979.4	-66.5	-0.0	41.7	1942.9
	25	56.3	-3791.9	66.5	0.0	-2.4	-0.3
17	22	-115.1	3999.1	153.3	-0.0	-76.8	1952.7
	25	115.1	-3811.6	-153.3	0.0	7.2	-0.5
1	28	12.5	-1922.7	487.6	0.0	75.9	-0.2
	31	-12.5	2166.4	-487.6	0.0	-319.7	-1022.1
2	28	20.3	-1922.7	567.4	0.0	119.1	-0.3
	31	-20.3	2166.4	-567.4	0.0	-402.8	-1022.0
3	28	12.1	-1922.7	481.7	0.0	74.0	-0.2
	31	-12.1	2166.4	-481.7	0.0	-314.8	-1022.1
4	28	23.1	-1922.7	-24.6	0.0	183.3	0.1
	31	-23.1	2166.4	24.6	0.0	-171.0	-1022.4
5	28	6.8	-1470.0	592.2	0.0	-1.7	-0.2
	31	-6.8	1657.5	-592.2	0.0	-292.8	-781.9
6	28	54.1	-1452.0	460.3	0.0	27.5	-0.4
	31	-54.1	1639.5	-460.3	0.0	-248.0	-772.9
7	28	8.4	-1479.0	350.1	0.0	51.3	-0.1
	31	-8.4	1666.5	-350.1	0.0	-226.4	-786.3
8	28	13.6	-1479.0	403.3	0.0	80.1	-0.2
	31	-13.6	1666.5	-403.3	0.0	-281.8	-786.2
9	28	8.1	-1479.0	346.2	0.0	50.1	-0.1
	31	-8.1	1666.5	-346.2	0.0	-223.2	-786.3
10	28	15.4	-1479.0	8.7	0.0	122.9	0.1
	31	-15.4	1666.5	-8.7	0.0	-127.2	-786.4
11	28	0.2	-1479.0	244.1	0.0	5.9	0.0
	31	-0.2	1666.5	-244.1	0.0	-127.9	-786.4
12	28	2.8	-1479.0	273.2	0.0	20.4	-0.0
	31	-2.8	1666.5	-273.2	0.0	-157.0	-786.3
13	28	0.5	-1479.0	221.8	0.0	6.6	0.0
	31	-0.5	1666.5	-221.8	0.0	-117.5	-786.4
14	28	3.2	-1479.0	194.3	0.0	28.9	0.0
	31	-3.2	1666.5	-194.3	0.0	-126.1	-786.4
15	28	13.9	-1479.0	407.3	0.0	81.4	-0.2
	31	-13.9	1666.5	-407.3	0.0	-285.0	-786.2
16	28	5.6	-1471.8	617.1	0.0	-2.3	-0.2
	31	-5.6	1659.3	-617.1	0.0	-304.4	-782.8
17	28	51.5	-1458.1	478.4	0.0	29.3	-0.4
	31	-51.5	1645.6	-478.4	0.0	-258.0	-775.9
1	23	-1.6	7065.7	182.1	-0.0	-121.2	3471.5

Comb.	Nodo	N [kg]	T1-2 [kg]	T1-3 [kg]	Mt [kgm]	M1-3 [kgm]	M1-2 [kgm]
	26	1.6	-6822.0	-182.1	0.0	30.2	0.4
2	23	1.5	6503.2	449.4	-0.0	-244.5	3190.2
	26	-1.5	-6259.5	-449.4	0.0	19.8	0.5
3	23	-0.9	6503.2	194.7	-0.0	-134.9	3190.3
	26	0.9	-6259.5	-194.7	0.0	37.6	0.4
4	23	-30.1	6503.2	317.6	0.0	-54.4	3190.3
	26	30.1	-6259.5	-317.6	-0.0	-104.4	0.3
5	23	-56.5	4727.9	127.1	0.0	-87.8	2316.9
	26	56.5	-4540.4	-127.1	-0.0	18.5	0.1
6	23	-126.3	4698.8	151.0	0.0	-113.1	2302.4
	26	126.3	-4511.3	-151.0	-0.0	-14.9	0.2
7	23	-1.6	5242.9	107.0	-0.0	-76.0	2574.3
	26	1.6	-5055.4	-107.0	0.0	22.5	0.3
8	23	0.5	4867.9	285.2	-0.0	-158.2	2386.7
	26	-0.5	-4680.4	-285.2	0.0	15.6	0.3
9	23	-1.1	4867.9	115.4	-0.0	-85.2	2386.8
	26	1.1	-4680.4	-115.4	0.0	27.5	0.3
10	23	-20.6	4867.9	197.3	0.0	-31.5	2386.8
	26	20.6	-4680.4	-197.3	-0.0	-67.1	0.2
11	23	-3.9	4867.9	-136.2	0.0	32.8	2386.9
	26	3.9	-4680.4	136.2	-0.0	35.4	0.2
12	23	-2.9	4742.9	-48.9	-0.0	-7.7	2324.4
	26	2.9	-4555.4	48.9	0.0	32.2	0.2
13	23	-4.3	4742.9	-129.5	0.0	40.6	2324.4
	26	4.3	-4555.4	129.5	-0.0	24.2	0.2
14	23	-7.1	4742.9	-66.4	0.0	17.6	2324.4
	26	7.1	-4555.4	66.4	-0.0	15.6	0.2
15	23	-0.0	5242.9	276.8	-0.0	-149.1	2574.2
	26	0.0	-5055.4	-276.8	0.0	10.7	0.3
16	23	-59.6	4754.9	143.2	0.0	-96.4	2330.4
	26	59.6	-4567.4	-143.2	-0.0	18.0	0.1
17	23	-139.2	4777.3	176.3	0.0	-127.7	2341.6
	26	139.2	-4589.8	-176.3	-0.0	-18.7	0.2
1	32	7.0	3175.7	140.4	0.0	-227.8	1526.6
	29	-7.0	-2932.0	-140.4	0.0	157.6	0.3
2	32	8.0	3175.7	133.7	0.0	-317.6	1526.6
	29	-8.0	-2932.0	-133.7	0.0	250.7	0.3
3	32	7.0	3175.7	195.1	0.0	-249.8	1526.7
	29	-7.0	-2932.0	-195.1	0.0	152.2	0.3
4	32	-23.9	3175.7	1301.2	0.0	-701.2	1526.8
	29	23.9	-2932.0	-1301.2	0.0	50.6	0.1
5	32	32.5	2454.8	381.3	0.0	-220.6	1180.4
	29	-32.5	-2267.3	-381.3	0.0	42.5	0.3
6	32	67.3	2470.0	194.6	0.0	-147.1	1188.0
	29	-67.3	-2282.5	-194.6	0.0	71.0	0.3
7	32	5.0	2442.9	97.5	0.0	-155.3	1174.3

Comb.	Nodo	N [kg]	T1-2 [kg]	T1-3 [kg]	Mt [kgm]	M1-3 [kgm]	M1-2 [kgm]
	29	-5.0	-2255.4	-97.5	0.0	106.5	0.2
8	32	5.7	2442.9	93.1	0.0	-215.1	1174.3
	29	-5.7	-2255.4	-93.1	0.0	168.6	0.2
9	32	5.0	2442.9	134.0	0.0	-169.9	1174.4
	29	-5.0	-2255.4	-134.0	0.0	102.9	0.2
10	32	-15.6	2442.9	871.4	0.0	-470.8	1174.5
	29	15.6	-2255.4	-871.4	0.0	35.1	0.1
11	32	3.6	2442.9	130.8	0.0	-73.6	1174.4
	29	-3.6	-2255.4	-130.8	0.0	8.2	0.1
12	32	4.0	2442.9	129.7	0.0	-104.3	1174.4
	29	-4.0	-2255.4	-129.7	0.0	39.4	0.2
13	32	3.0	2442.9	59.8	0.0	-41.8	1174.4
	29	-3.0	-2255.4	-59.8	0.0	11.9	0.1
14	32	-0.3	2442.9	285.4	0.0	-155.4	1174.4
	29	0.3	-2255.4	-285.4	0.0	12.7	0.1
15	32	5.6	2442.9	56.6	0.0	-200.5	1174.3
	29	-5.6	-2255.4	-56.6	0.0	172.2	0.2
16	32	35.1	2440.6	405.3	0.0	-234.1	1173.3
	29	-35.1	-2253.1	-405.3	0.0	44.9	0.3
17	32	74.7	2423.7	207.0	0.0	-155.8	1164.8
	29	-74.7	-2236.2	-207.0	0.0	76.0	0.3
1	24	0.7	1253.0	-252.4	-0.0	128.4	565.8
	27	-0.7	-1009.3	252.4	0.0	-2.2	-0.2
2	24	-2.2	1253.0	-536.3	-0.0	277.1	565.8
	27	2.2	-1009.3	536.3	0.0	-8.9	-0.2
3	24	1.0	1253.0	-248.2	-0.0	125.9	565.7
	27	-1.0	-1009.3	248.2	0.0	-1.8	-0.2
4	24	-2.5	1253.0	2616.0	0.0	-1274.4	565.9
	27	2.5	-1009.3	-2616.0	-0.0	-33.6	-0.3
5	24	-0.8	956.8	-320.2	-0.0	150.2	431.6
	27	0.8	-769.3	320.2	0.0	5.7	0.2
6	24	-26.2	942.7	-317.3	-0.0	145.4	424.6
	27	26.2	-755.2	317.3	0.0	-19.6	0.4
7	24	0.9	963.9	-156.9	-0.0	79.0	435.2
	27	-0.9	-776.4	156.9	0.0	-0.6	-0.1
8	24	-1.1	963.9	-346.2	-0.0	178.2	435.2
	27	1.1	-776.4	346.2	0.0	-5.1	-0.1
9	24	1.0	963.9	-154.1	-0.0	77.4	435.2
	27	-1.0	-776.4	154.1	0.0	-0.3	-0.1
10	24	-1.3	963.9	1755.3	0.0	-856.2	435.3
	27	1.3	-776.4	-1755.3	-0.0	-21.5	-0.2
11	24	3.7	963.9	119.7	0.0	-66.5	435.2
	27	-3.7	-776.4	-119.7	-0.0	6.6	-0.1
12	24	2.7	963.9	26.2	0.0	-17.4	435.2
	27	-2.7	-776.4	-26.2	-0.0	4.3	-0.1
13	24	3.1	963.9	102.3	0.0	-57.6	435.2

Comb.	Nodo	N [kg]	T1-2 [kg]	T1-3 [kg]	Mt [kgm]	M1-3 [kgm]	M1-2 [kgm]
	27	-3.1	-776.4	-102.3	-0.0	6.4	-0.1
14	24	2.7	963.9	446.5	0.0	-224.3	435.2
	27	-2.7	-776.4	-446.5	-0.0	1.0	-0.1
15	24	-1.2	963.9	-348.9	-0.0	179.8	435.2
	27	1.2	-776.4	348.9	0.0	-5.3	-0.1
16	24	-1.1	968.1	-348.5	-0.0	164.2	437.3
	27	1.1	-780.6	348.5	0.0	5.9	0.2
17	24	-27.1	980.1	-360.3	-0.0	166.6	443.3
	27	27.1	-792.6	360.3	0.0	-21.6	0.4
1	30	-19.5	-1009.3	-628.0	0.0	98.6	0.4
	33	19.5	1253.0	628.0	0.0	215.4	-566.0
2	30	-28.4	-1009.3	-701.2	0.0	137.4	0.6
	33	28.4	1253.0	701.2	0.0	213.1	-566.2
3	30	-19.1	-1009.3	-676.8	0.0	97.6	0.4
	33	19.1	1253.0	676.8	0.0	240.7	-566.0
4	30	0.8	-1009.3	-1276.6	0.0	11.8	-0.0
	33	-0.8	1253.0	1276.6	0.0	626.5	-565.6
5	30	0.2	-781.9	-881.3	0.0	57.8	0.5
	33	-0.2	969.4	881.3	0.0	396.0	-439.0
6	30	20.5	-798.1	-573.2	0.0	60.1	0.7
	33	-20.5	985.6	573.2	0.0	264.5	-446.3
7	30	-13.4	-776.4	-447.7	0.0	68.2	0.3
	33	13.4	963.9	447.7	0.0	155.7	-435.4
8	30	-19.3	-776.4	-496.4	0.0	94.1	0.4
	33	19.3	963.9	496.4	0.0	154.1	-435.5
9	30	-13.1	-776.4	-480.2	0.0	67.5	0.3
	33	13.1	963.9	480.2	0.0	172.5	-435.4
10	30	0.1	-776.4	-880.0	0.0	10.3	0.0
	33	-0.1	963.9	880.0	0.0	429.7	-435.1
11	30	-3.8	-776.4	-375.0	0.0	25.7	0.1
	33	3.8	963.9	375.0	0.0	161.8	-435.2
12	30	-6.8	-776.4	-402.9	0.0	39.0	0.2
	33	6.8	963.9	402.9	0.0	162.5	-435.2
13	30	-3.6	-776.4	-281.7	0.0	22.9	0.1
	33	3.6	963.9	281.7	0.0	117.9	-435.2
14	30	-2.9	-776.4	-479.6	0.0	22.2	0.1
	33	2.9	963.9	479.6	0.0	217.6	-435.2
15	30	-19.5	-776.4	-463.9	0.0	94.7	0.4
	33	19.5	963.9	463.9	0.0	137.3	-435.5
16	30	0.2	-770.0	-935.3	0.0	61.0	0.5
	33	-0.2	957.5	935.3	0.0	421.1	-433.0
17	30	21.6	-758.4	-599.5	0.0	64.1	0.7
	33	-21.6	945.9	599.5	0.0	278.0	-426.5
1	34	-1093.0	-9676.6	-275.0	87.8	1744.5	-23708.3
	39	1093.0	9676.6	275.0	-87.8	-933.3	-4837.8

Comb.	Nodo	N [kg]	T1-2 [kg]	T1-3 [kg]	Mt [kgm]	M1-3 [kgm]	M1-2 [kgm]
2	34	-2158.1	-13089.4	-452.8	146.8	2880.9	-33758.5
	39	2158.1	13089.4	452.8	-146.8	-1545.2	-4855.3
3	34	-1100.1	-9453.4	-267.7	85.7	1709.9	-23334.1
	39	1100.1	9453.4	267.7	-85.7	-920.2	-4553.5
4	34	-2174.1	-3774.3	4026.5	2234.0	-5430.4	-8156.6
	39	2174.1	3774.3	-4026.5	-2234.0	-6447.6	-2977.7
5	34	422.1	-2287.4	-2.7	299.7	0.1	-4382.1
	39	-422.1	2287.4	2.7	-299.7	17.9	-2351.1
6	34	-209.2	-4036.7	-59.6	466.5	416.0	-9228.3
	39	209.2	4036.7	59.6	-466.5	-238.1	-2689.5
7	34	-699.8	-6675.5	-183.3	60.0	1165.6	-16220.9
	39	699.8	6675.5	183.3	-60.0	-624.7	-3472.0
8	34	-1409.9	-8950.7	-301.9	99.3	1923.2	-22921.1
	39	1409.9	8950.7	301.9	-99.3	-1032.7	-3483.6
9	34	-704.6	-6526.7	-178.5	58.6	1142.5	-15971.4
	39	704.6	6526.7	178.5	-58.6	-616.0	-3282.4
10	34	-1420.5	-2740.7	2684.3	1490.8	-3617.7	-5853.1
	39	1420.5	2740.7	-2684.3	-1490.8	-4300.9	-2231.9
11	34	321.1	-2669.5	1.9	1.8	-2.3	-5071.4
	39	-321.1	2669.5	-1.9	-1.8	-3.4	-2803.7
12	34	-29.6	-3856.5	-57.6	21.2	377.4	-8515.9
	39	29.6	3856.5	57.6	-21.2	-207.4	-2860.8
13	34	277.7	-2334.9	-2.4	6.8	23.6	-4375.3
	39	-277.7	2334.9	2.4	-6.8	-16.5	-2512.6
14	34	-31.7	-2614.5	539.6	299.5	-730.8	-5102.3
	39	31.7	2614.5	-539.6	-299.5	-861.1	-2610.4
15	34	-1405.1	-9099.6	-306.7	100.7	1946.2	-23170.5
	39	1405.1	9099.6	306.7	-100.7	-1041.4	-3673.2
16	34	436.0	-2290.4	-2.6	323.3	-2.1	-4397.5
	39	-436.0	2290.4	2.6	-323.3	20.1	-2343.2
17	34	-250.1	-4187.0	-64.7	503.7	450.9	-9650.9
	39	250.1	4187.0	64.7	-503.7	-258.3	-2712.2
1	39	-262.7	-2291.2	-270.0	61.0	933.1	-713.6
	40	262.7	2291.2	270.0	-61.0	-136.6	-6045.5
2	39	-937.2	-3782.6	-450.1	101.5	1545.0	-3520.1
	40	937.2	3782.6	450.1	-101.5	-217.1	-7638.7
3	39	-276.8	-2323.6	-263.1	59.1	920.0	-963.2
	40	276.8	2323.6	263.1	-59.1	-143.9	-5891.5
4	39	-1896.1	-286.7	-156.0	522.9	6460.7	1388.6
	40	1896.1	286.7	156.0	-522.9	-6000.6	-2234.3
5	39	551.7	-87.4	-0.1	349.7	-17.9	1715.1
	40	-551.7	87.4	0.1	-349.7	29.8	-1959.5
6	39	96.1	-715.0	-61.4	494.7	238.0	701.6
	40	-96.1	715.0	61.4	-494.7	-59.5	-2807.7
7	39	-135.6	-1531.2	-179.5	42.0	624.6	-287.2
	40	135.6	1531.2	179.5	-42.0	-95.0	-4229.7

Comb.	Nodo	N [kg]	T1-2 [kg]	T1-3 [kg]	Mt [kgm]	M1-3 [kgm]	M1-2 [kgm]
8	39	-585.2	-2525.4	-299.6	69.0	1032.5	-2158.3
	40	585.2	2525.4	299.6	-69.0	-148.7	-5291.8
9	39	-144.9	-1552.8	-174.9	40.7	615.9	-453.7
	40	144.9	1552.8	174.9	-40.7	-99.9	-4127.0
10	39	-1224.5	-194.8	-103.5	349.9	4309.6	1114.2
	40	1224.5	194.8	103.5	-349.9	-4004.4	-1688.9
11	39	464.9	-63.8	7.2	2.1	3.3	2025.8
	40	-464.9	63.8	-7.2	-2.1	-24.5	-2213.9
12	39	247.2	-560.7	-53.1	15.4	207.3	1126.6
	40	-247.2	560.7	53.1	-15.4	-50.8	-2780.5
13	39	396.5	-32.3	2.4	6.5	16.4	1870.4
	40	-396.5	32.3	-2.4	-6.5	-23.4	-1965.9
14	39	119.4	-94.5	-13.8	71.5	862.8	1781.1
	40	-119.4	94.5	13.8	-71.5	-821.9	-2059.9
15	39	-575.9	-2503.8	-304.2	70.3	1041.2	-1991.8
	40	575.9	2503.8	304.2	-70.3	-143.8	-5394.5
16	39	567.6	-92.5	-0.0	377.3	-20.2	1705.0
	40	-567.6	92.5	0.0	-377.3	33.7	-1963.1
17	39	71.7	-772.7	-67.0	534.3	258.1	606.3
	40	-71.7	772.7	67.0	-534.3	-64.2	-2882.4
1	40	185.1	-1580.3	-261.7	42.8	136.6	2144.4
	41	-185.1	1580.3	261.7	-42.8	635.3	-6806.2
2	40	-85.8	-5053.8	-441.7	69.4	217.2	705.4
	41	85.8	5053.8	441.7	-69.4	1085.7	-15614.0
3	40	186.1	-1808.5	-255.1	41.1	144.0	1915.4
	41	-186.1	1808.5	255.1	-41.1	608.5	-7250.6
4	40	-1997.8	1975.1	-4393.0	-1274.2	5989.2	2460.2
	41	1997.8	-1975.1	4393.0	1274.2	6970.1	3366.3
5	40	472.3	1978.9	-33.7	385.5	-29.6	2291.7
	41	-472.3	-1978.9	33.7	-385.5	85.0	3549.1
6	40	164.5	614.1	-70.3	505.7	59.5	1843.5
	41	-164.5	-614.1	70.3	-505.7	145.0	-31.0
7	40	151.4	-822.5	-173.5	29.9	95.1	1678.4
	41	-151.4	822.5	173.5	-29.9	416.7	-4104.9
8	40	-29.2	-3138.2	-293.5	47.6	148.8	719.1
	41	29.2	3138.2	293.5	-47.6	717.0	-9976.8
9	40	152.0	-974.7	-169.1	28.7	99.9	1525.8
	41	-152.0	974.7	169.1	-28.7	398.8	-4401.2
10	40	-1303.9	1547.7	-2927.7	-848.1	3996.7	1888.9
	41	1303.9	-1547.7	2927.7	848.1	4639.9	2676.8
11	40	368.5	2223.5	12.2	3.6	24.5	2603.8
	41	-368.5	-2223.5	-12.2	-3.6	-60.6	3955.4
12	40	284.2	1096.2	-47.9	12.3	50.8	2164.3
	41	-284.2	-1096.2	47.9	-12.3	90.5	1069.6
13	40	297.2	2112.0	6.9	7.3	23.4	2382.8
	41	-297.2	-2112.0	-6.9	-7.3	-43.7	3847.7

Comb.	Nodo	N [kg]	T1-2 [kg]	T1-3 [kg]	Mt [kgm]	M1-3 [kgm]	M1-2 [kgm]
14	40	29.3	2033.4	-574.8	-166.9	820.4	2398.2
	41	-29.3	-2033.4	574.8	166.9	875.1	3600.3
15	40	-29.9	-2986.0	-297.9	48.7	143.9	871.7
	41	29.9	2986.0	297.9	-48.7	734.9	-9680.5
16	40	490.5	1968.4	-37.1	415.7	-33.4	2287.2
	41	-490.5	-1968.4	37.1	-415.7	97.0	3523.1
17	40	155.0	488.3	-77.1	546.1	64.3	1800.7
	41	-155.0	-488.3	77.1	-546.1	162.2	-359.2
1	41	2889.7	-11927.4	-705.1	217.7	528.2	-21100.6
	46	-2889.7	11927.4	705.1	-217.7	1199.3	-8121.5
2	41	4521.4	-16868.0	-972.8	311.3	677.9	-31203.2
	46	-4521.4	16868.0	972.8	-311.3	1705.5	-10123.5
3	41	2909.7	-11763.4	-743.3	226.0	566.3	-20833.5
	46	-2909.7	11763.4	743.3	-226.0	1254.7	-7986.8
4	41	-804.9	-4154.7	2773.5	-1849.9	-6621.6	-5554.2
	46	804.9	4154.7	-2773.5	1849.9	-173.5	-4624.9
5	41	743.3	-2838.3	-220.0	58.7	413.1	-4254.2
	46	-743.3	2838.3	220.0	-58.7	123.9	-2695.8
6	41	1263.6	-5083.0	-269.9	422.7	342.5	-8693.8
	46	-1263.6	5083.0	269.9	-422.7	402.7	-3760.4
7	41	1940.9	-8250.1	-483.9	148.6	370.9	-14524.9
	46	-1940.9	8250.1	483.9	-148.6	814.6	-5687.9
8	41	3028.7	-11543.9	-662.3	210.9	470.7	-21260.0
	46	-3028.7	11543.9	662.3	-210.9	1152.1	-7022.5
9	41	1954.2	-8140.8	-509.3	154.1	396.3	-14346.8
	46	-1954.2	8140.8	509.3	-154.1	851.6	-5598.0
10	41	-522.2	-3068.3	1835.2	-1229.9	-4395.7	-4160.6
	46	522.2	3068.3	-1835.2	1229.9	-100.6	-3356.8
11	41	274.3	-2896.7	-219.2	54.4	232.4	-3944.3
	46	-274.3	2896.7	219.2	-54.4	304.7	-3152.7
12	41	823.5	-4577.3	-311.0	86.2	283.9	-7345.1
	46	-823.5	4577.3	311.0	-86.2	477.9	-3869.2
13	41	190.7	-2680.6	-149.6	37.6	173.5	-3842.6
	46	-190.7	2680.6	149.6	-37.6	193.1	-2724.9
14	41	113.4	-2882.2	188.6	-201.9	-689.4	-3925.3
	46	-113.4	2882.2	-188.6	201.9	227.4	-3136.1
15	41	3015.3	-11653.2	-636.9	205.4	445.2	-21438.1
	46	-3015.3	11653.2	636.9	-205.4	1115.2	-7112.3
16	41	796.3	-2854.9	-230.2	59.4	439.2	-4289.8
	46	-796.3	2854.9	230.2	-59.4	121.4	-2700.5
17	41	1371.6	-5288.5	-285.4	453.8	366.1	-9104.7
	46	-1371.6	5288.5	285.4	-453.8	425.2	-3853.5
1	46	3582.0	-5267.2	-696.7	264.9	-1199.2	3464.1
	47	-3582.0	5267.2	696.7	-264.9	2906.2	-16368.8
2	46	5643.6	-10961.7	-963.1	373.1	-1705.4	2504.3

Comb.	Nodo	N [kg]	T1-2 [kg]	T1-3 [kg]	Mt [kgm]	M1-3 [kgm]	M1-2 [kgm]
	47	-5643.6	10961.7	963.1	-373.1	4064.9	-29360.5
3	46	3596.7	-5341.8	-734.4	275.5	-1254.6	3349.6
	47	-3596.7	5341.8	734.4	-275.5	3053.9	-16437.1
4	46	-685.3	1858.3	20.3	-1019.3	171.7	3900.6
	47	685.3	-1858.3	-20.3	1019.3	-221.3	652.2
5	46	865.6	1038.7	-230.2	62.4	-123.9	2202.2
	47	-865.6	-1038.7	230.2	-62.4	536.9	254.9
6	46	1519.4	-1218.6	-267.9	422.8	-402.7	2045.6
	47	-1519.4	1218.6	267.9	-422.8	1002.5	-5072.3
7	46	2411.5	-3414.3	-478.0	181.0	-814.6	2537.1
	47	-2411.5	3414.3	478.0	-181.0	1985.7	-10902.1
8	46	3786.0	-7210.6	-655.6	253.1	-1152.0	1897.2
	47	-3786.0	7210.6	655.6	-253.1	2758.1	-19563.2
9	46	2421.4	-3464.0	-503.1	188.1	-851.5	2460.7
	47	-2421.4	3464.0	503.1	-188.1	2084.1	-10947.6
10	46	-433.3	1336.1	-0.0	-675.1	99.4	2828.1
	47	433.3	-1336.1	0.0	675.1	-99.3	445.2
11	46	317.7	1818.7	-214.9	71.5	-304.6	2940.8
	47	-317.7	-1818.7	214.9	-71.5	831.1	1515.1
12	46	1009.6	-33.7	-306.1	108.5	-477.9	2674.2
	47	-1009.6	33.7	306.1	-108.5	1227.8	-2756.7
13	46	247.8	1367.7	-146.5	49.4	-193.1	2444.7
	47	-247.8	-1367.7	146.5	-49.4	552.0	906.2
14	46	165.7	1675.7	-175.0	-77.1	-227.6	2860.4
	47	-165.7	-1675.7	175.0	77.1	656.3	1245.0
15	46	3776.1	-7160.9	-630.5	246.0	-1115.1	1973.6
	47	-3776.1	7160.9	630.5	-246.0	2659.7	-19517.7
16	46	923.2	1018.6	-240.9	62.4	-121.5	2187.1
	47	-923.2	-1018.6	240.9	-62.4	539.4	210.3
17	46	1641.7	-1430.8	-283.4	453.1	-425.2	2015.4
	47	-1641.7	1430.8	283.4	-453.1	1054.6	-5568.0
1	35	1055.2	0.0	0.0	0.0	0.0	0.0
	42	-1055.2	0.0	0.0	0.0	0.0	0.0
2	35	1786.1	0.0	0.0	0.0	0.0	0.0
	42	-1786.1	0.0	0.0	0.0	0.0	0.0
3	35	1041.2	0.0	0.0	0.0	0.0	0.0
	42	-1041.2	0.0	0.0	0.0	0.0	0.0
4	35	1663.1	0.0	0.0	0.0	0.0	0.0
	42	-1663.1	0.0	0.0	0.0	0.0	0.0
5	35	-46.4	0.0	0.0	0.0	0.0	0.0
	42	46.4	0.0	0.0	0.0	0.0	0.0
6	35	42.0	0.0	0.0	0.0	0.0	0.0
	42	-42.0	0.0	0.0	0.0	0.0	0.0
7	35	702.8	0.0	0.0	0.0	0.0	0.0
	42	-702.8	0.0	0.0	0.0	0.0	0.0
8	35	1190.0	0.0	0.0	0.0	0.0	0.0

Comb.	Nodo	N [kg]	T1-2 [kg]	T1-3 [kg]	Mt [kgm]	M1-3 [kgm]	M1-2 [kgm]
	42	-1190.0	0.0	0.0	0.0	0.0	0.0
9	35	693.5	0.0	0.0	0.0	0.0	0.0
	42	-693.5	0.0	0.0	0.0	0.0	0.0
10	35	1108.1	0.0	0.0	0.0	0.0	0.0
	42	-1108.1	0.0	0.0	0.0	0.0	0.0
11	35	-33.9	0.0	0.0	0.0	0.0	0.0
	42	33.9	0.0	0.0	0.0	0.0	0.0
12	35	209.4	0.0	0.0	0.0	0.0	0.0
	42	-209.4	0.0	0.0	0.0	0.0	0.0
13	35	-14.4	0.0	0.0	0.0	0.0	0.0
	42	14.4	0.0	0.0	0.0	0.0	0.0
14	35	193.0	0.0	0.0	0.0	0.0	0.0
	42	-193.0	0.0	0.0	0.0	0.0	0.0
15	35	1199.3	0.0	0.0	0.0	0.0	0.0
	42	-1199.3	0.0	0.0	0.0	0.0	0.0
16	35	-47.2	0.0	0.0	0.0	0.0	0.0
	42	47.2	0.0	0.0	0.0	0.0	0.0
17	35	48.5	0.0	0.0	0.0	0.0	0.0
	42	-48.5	0.0	0.0	0.0	0.0	0.0
1	42	228.2	0.0	0.0	0.0	0.0	0.0
	48	-228.2	0.0	0.0	0.0	0.0	0.0
2	42	424.4	0.0	0.0	0.0	0.0	0.0
	48	-424.4	0.0	0.0	0.0	0.0	0.0
3	42	215.5	0.0	0.0	0.0	0.0	0.0
	48	-215.5	0.0	0.0	0.0	0.0	0.0
4	42	2497.9	0.0	0.0	0.0	0.0	0.0
	48	-2497.9	0.0	0.0	0.0	0.0	0.0
5	42	340.0	0.0	0.0	0.0	0.0	0.0
	48	-340.0	0.0	0.0	0.0	0.0	0.0
6	42	-35.5	0.0	0.0	0.0	0.0	0.0
	48	35.5	0.0	0.0	0.0	0.0	0.0
7	42	148.8	0.0	0.0	0.0	0.0	0.0
	48	-148.8	0.0	0.0	0.0	0.0	0.0
8	42	279.6	0.0	0.0	0.0	0.0	0.0
	48	-279.6	0.0	0.0	0.0	0.0	0.0
9	42	140.3	0.0	0.0	0.0	0.0	0.0
	48	-140.3	0.0	0.0	0.0	0.0	0.0
10	42	1661.9	0.0	0.0	0.0	0.0	0.0
	48	-1661.9	0.0	0.0	0.0	0.0	0.0
11	42	-52.3	0.0	0.0	0.0	0.0	0.0
	48	52.3	0.0	0.0	0.0	0.0	0.0
12	42	12.7	0.0	0.0	0.0	0.0	0.0
	48	-12.7	0.0	0.0	0.0	0.0	0.0
13	42	-34.1	0.0	0.0	0.0	0.0	0.0
	48	34.1	0.0	0.0	0.0	0.0	0.0
14	42	289.1	0.0	0.0	0.0	0.0	0.0

Comb.	Nodo	N [kg]	T1-2 [kg]	T1-3 [kg]	Mt [kgm]	M1-3 [kgm]	M1-2 [kgm]
	48	-289.1	0.0	0.0	0.0	0.0	0.0
15	42	288.1	0.0	0.0	0.0	0.0	0.0
	48	-288.1	0.0	0.0	0.0	0.0	0.0
16	42	368.2	0.0	0.0	0.0	0.0	0.0
	48	-368.2	0.0	0.0	0.0	0.0	0.0
17	42	-36.4	0.0	0.0	0.0	0.0	0.0
	48	36.4	0.0	0.0	0.0	0.0	0.0
1	36	817.8	0.0	0.0	0.0	0.0	0.0
	43	-817.8	0.0	0.0	0.0	0.0	0.0
2	36	1393.7	0.0	0.0	0.0	0.0	0.0
	43	-1393.7	0.0	0.0	0.0	0.0	0.0
3	36	812.8	0.0	0.0	0.0	0.0	0.0
	43	-812.8	0.0	0.0	0.0	0.0	0.0
4	36	715.4	0.0	0.0	0.0	0.0	0.0
	43	-715.4	0.0	0.0	0.0	0.0	0.0
5	36	102.8	0.0	0.0	0.0	0.0	0.0
	43	-102.8	0.0	0.0	0.0	0.0	0.0
6	36	-23.8	0.0	0.0	0.0	0.0	0.0
	43	23.8	0.0	0.0	0.0	0.0	0.0
7	36	543.8	0.0	0.0	0.0	0.0	0.0
	43	-543.8	0.0	0.0	0.0	0.0	0.0
8	36	927.7	0.0	0.0	0.0	0.0	0.0
	43	-927.7	0.0	0.0	0.0	0.0	0.0
9	36	540.5	0.0	0.0	0.0	0.0	0.0
	43	-540.5	0.0	0.0	0.0	0.0	0.0
10	36	475.5	0.0	0.0	0.0	0.0	0.0
	43	-475.5	0.0	0.0	0.0	0.0	0.0
11	36	-30.7	0.0	0.0	0.0	0.0	0.0
	43	30.7	0.0	0.0	0.0	0.0	0.0
12	36	160.8	0.0	0.0	0.0	0.0	0.0
	43	-160.8	0.0	0.0	0.0	0.0	0.0
13	36	-19.2	0.0	0.0	0.0	0.0	0.0
	43	19.2	0.0	0.0	0.0	0.0	0.0
14	36	70.3	0.0	0.0	0.0	0.0	0.0
	43	-70.3	0.0	0.0	0.0	0.0	0.0
15	36	931.1	0.0	0.0	0.0	0.0	0.0
	43	-931.1	0.0	0.0	0.0	0.0	0.0
16	36	111.7	0.0	0.0	0.0	0.0	0.0
	43	-111.7	0.0	0.0	0.0	0.0	0.0
17	36	-24.7	0.0	0.0	0.0	0.0	0.0
	43	24.7	0.0	0.0	0.0	0.0	0.0
1	43	1416.4	0.0	0.0	0.0	0.0	0.0
	49	-1416.4	0.0	0.0	0.0	0.0	0.0
2	43	2129.7	0.0	0.0	0.0	0.0	0.0
	49	-2129.7	0.0	0.0	0.0	0.0	0.0

Comb.	Nodo	N [kg]	T1-2 [kg]	T1-3 [kg]	Mt [kgm]	M1-3 [kgm]	M1-2 [kgm]
3	43	1387.7	0.0	0.0	0.0	0.0	0.0
	49	-1387.7	0.0	0.0	0.0	0.0	0.0
4	43	2293.2	0.0	0.0	0.0	0.0	0.0
	49	-2293.2	0.0	0.0	0.0	0.0	0.0
5	43	668.3	0.0	0.0	0.0	0.0	0.0
	49	-668.3	0.0	0.0	0.0	0.0	0.0
6	43	497.9	0.0	0.0	0.0	0.0	0.0
	49	-497.9	0.0	0.0	0.0	0.0	0.0
7	43	966.9	0.0	0.0	0.0	0.0	0.0
	49	-966.9	0.0	0.0	0.0	0.0	0.0
8	43	1442.4	0.0	0.0	0.0	0.0	0.0
	49	-1442.4	0.0	0.0	0.0	0.0	0.0
9	43	947.7	0.0	0.0	0.0	0.0	0.0
	49	-947.7	0.0	0.0	0.0	0.0	0.0
10	43	1551.4	0.0	0.0	0.0	0.0	0.0
	49	-1551.4	0.0	0.0	0.0	0.0	0.0
11	43	207.9	0.0	0.0	0.0	0.0	0.0
	49	-207.9	0.0	0.0	0.0	0.0	0.0
12	43	448.6	0.0	0.0	0.0	0.0	0.0
	49	-448.6	0.0	0.0	0.0	0.0	0.0
13	43	204.3	0.0	0.0	0.0	0.0	0.0
	49	-204.3	0.0	0.0	0.0	0.0	0.0
14	43	470.4	0.0	0.0	0.0	0.0	0.0
	49	-470.4	0.0	0.0	0.0	0.0	0.0
15	43	1461.5	0.0	0.0	0.0	0.0	0.0
	49	-1461.5	0.0	0.0	0.0	0.0	0.0
16	43	705.1	0.0	0.0	0.0	0.0	0.0
	49	-705.1	0.0	0.0	0.0	0.0	0.0
17	43	522.4	0.0	0.0	0.0	0.0	0.0
	49	-522.4	0.0	0.0	0.0	0.0	0.0
1	37	2014.5	0.0	0.0	0.0	0.0	0.0
	44	-2014.5	0.0	0.0	0.0	0.0	0.0
2	37	2873.1	0.0	0.0	0.0	0.0	0.0
	44	-2873.1	0.0	0.0	0.0	0.0	0.0
3	37	1960.1	0.0	0.0	0.0	0.0	0.0
	44	-1960.1	0.0	0.0	0.0	0.0	0.0
4	37	992.4	0.0	0.0	0.0	0.0	0.0
	44	-992.4	0.0	0.0	0.0	0.0	0.0
5	37	674.9	0.0	0.0	0.0	0.0	0.0
	44	-674.9	0.0	0.0	0.0	0.0	0.0
6	37	657.9	0.0	0.0	0.0	0.0	0.0
	44	-657.9	0.0	0.0	0.0	0.0	0.0
7	37	1392.8	0.0	0.0	0.0	0.0	0.0
	44	-1392.8	0.0	0.0	0.0	0.0	0.0
8	37	1965.2	0.0	0.0	0.0	0.0	0.0
	44	-1965.2	0.0	0.0	0.0	0.0	0.0

Comb.	Nodo	N [kg]	T1-2 [kg]	T1-3 [kg]	Mt [kgm]	M1-3 [kgm]	M1-2 [kgm]
9	37	1356.5	0.0	0.0	0.0	0.0	0.0
	44	-1356.5	0.0	0.0	0.0	0.0	0.0
10	37	711.3	0.0	0.0	0.0	0.0	0.0
	44	-711.3	0.0	0.0	0.0	0.0	0.0
11	37	447.1	0.0	0.0	0.0	0.0	0.0
	44	-447.1	0.0	0.0	0.0	0.0	0.0
12	37	739.0	0.0	0.0	0.0	0.0	0.0
	44	-739.0	0.0	0.0	0.0	0.0	0.0
13	37	439.8	0.0	0.0	0.0	0.0	0.0
	44	-439.8	0.0	0.0	0.0	0.0	0.0
14	37	488.2	0.0	0.0	0.0	0.0	0.0
	44	-488.2	0.0	0.0	0.0	0.0	0.0
15	37	2001.5	0.0	0.0	0.0	0.0	0.0
	44	-2001.5	0.0	0.0	0.0	0.0	0.0
16	37	693.5	0.0	0.0	0.0	0.0	0.0
	44	-693.5	0.0	0.0	0.0	0.0	0.0
17	37	675.8	0.0	0.0	0.0	0.0	0.0
	44	-675.8	0.0	0.0	0.0	0.0	0.0
1	44	-741.7	0.0	0.0	0.0	0.0	0.0
	50	741.7	0.0	0.0	0.0	0.0	0.0
2	44	-675.2	0.0	0.0	0.0	0.0	0.0
	50	675.2	0.0	0.0	0.0	0.0	0.0
3	44	-651.0	0.0	0.0	0.0	0.0	0.0
	50	651.0	0.0	0.0	0.0	0.0	0.0
4	44	811.7	0.0	0.0	0.0	0.0	0.0
	50	-811.7	0.0	0.0	0.0	0.0	0.0
5	44	-137.5	0.0	0.0	0.0	0.0	0.0
	50	137.5	0.0	0.0	0.0	0.0	0.0
6	44	-720.3	0.0	0.0	0.0	0.0	0.0
	50	720.3	0.0	0.0	0.0	0.0	0.0
7	44	-552.7	0.0	0.0	0.0	0.0	0.0
	50	552.7	0.0	0.0	0.0	0.0	0.0
8	44	-508.3	0.0	0.0	0.0	0.0	0.0
	50	508.3	0.0	0.0	0.0	0.0	0.0
9	44	-492.2	0.0	0.0	0.0	0.0	0.0
	50	492.2	0.0	0.0	0.0	0.0	0.0
10	44	483.0	0.0	0.0	0.0	0.0	0.0
	50	-483.0	0.0	0.0	0.0	0.0	0.0
11	44	-496.1	0.0	0.0	0.0	0.0	0.0
	50	496.1	0.0	0.0	0.0	0.0	0.0
12	44	-480.9	0.0	0.0	0.0	0.0	0.0
	50	480.9	0.0	0.0	0.0	0.0	0.0
13	44	-512.2	0.0	0.0	0.0	0.0	0.0
	50	512.2	0.0	0.0	0.0	0.0	0.0
14	44	-282.6	0.0	0.0	0.0	0.0	0.0
	50	282.6	0.0	0.0	0.0	0.0	0.0

Comb.	Nodo	N [kg]	T1-2 [kg]	T1-3 [kg]	Mt [kgm]	M1-3 [kgm]	M1-2 [kgm]
15	44	-568.8	0.0	0.0	0.0	0.0	0.0
	50	568.8	0.0	0.0	0.0	0.0	0.0
16	44	-107.8	0.0	0.0	0.0	0.0	0.0
	50	107.8	0.0	0.0	0.0	0.0	0.0
17	44	-738.4	0.0	0.0	0.0	0.0	0.0
	50	738.4	0.0	0.0	0.0	0.0	0.0
1	38	-17397.2	22544.0	-248.0	34.7	1122.9	20925.4
	45	17397.2	30025.0	248.0	-34.7	1071.5	-54029.1
2	38	-21063.0	18308.6	-373.7	59.3	1764.0	8467.7
	45	21063.0	29879.6	373.7	-59.3	1543.0	-59669.5
3	38	-16193.9	20251.5	-256.1	27.4	1131.3	17351.6
	45	16193.9	27936.7	256.1	-27.4	1135.2	-51358.6
4	38	-8869.4	23482.4	-56.9	-220.7	141.4	31987.8
	45	8869.4	24705.9	56.9	220.7	361.8	-37401.8
5	38	-8629.3	17118.6	-73.0	316.0	321.1	23408.8
	45	8629.3	17927.4	73.0	-316.0	325.8	-26987.5
6	38	-9845.8	16142.9	-111.1	499.9	514.8	18960.9
	45	9845.8	18903.1	111.1	-499.9	469.5	-31175.1
7	38	-12429.9	16947.6	-167.7	25.1	755.5	16624.3
	45	12429.9	21992.4	167.7	-25.1	728.7	-38947.8
8	38	-14873.8	14124.0	-251.5	41.5	1182.9	8319.2
	45	14873.8	21895.5	251.5	-41.5	1043.0	-42708.1
9	38	-11627.7	15419.3	-173.1	20.2	761.1	14241.8
	45	11627.7	20600.2	173.1	-20.2	771.1	-37167.5
10	38	-6744.7	17573.2	-40.3	-145.1	101.1	23999.2
	45	6744.7	18446.3	40.3	145.1	255.5	-27862.9
11	38	-7106.2	17514.1	-42.6	-1.9	105.3	23765.6
	45	7106.2	18505.4	42.6	1.9	271.9	-28152.2
12	38	-8423.2	16340.1	-85.1	6.1	320.6	19939.1
	45	8423.2	18705.9	85.1	-6.1	432.2	-30407.3
13	38	-7286.7	17200.5	-27.8	9.1	77.4	23796.4
	45	7286.7	17845.5	27.8	-9.1	168.4	-26650.8
14	38	-6797.4	17030.0	-42.8	-31.3	104.3	23075.1
	45	6797.4	18016.0	42.8	31.3	274.7	-27438.3
15	38	-15676.0	15652.3	-246.1	46.4	1177.3	10701.7
	45	15676.0	23287.7	246.1	-46.4	1000.5	-44488.4
16	38	-8731.2	17108.5	-77.1	340.6	341.8	23362.4
	45	8731.2	17937.5	77.1	-340.6	341.5	-27030.7
17	38	-10047.7	16053.8	-118.2	539.6	551.4	18553.8
	45	10047.7	18992.2	118.2	-539.6	496.0	-31556.8
1	45	7652.3	9417.7	-48.9	-1.9	-49.8	237.8
	51	-7652.3	19688.3	48.9	1.9	289.2	-25401.0
2	45	11467.4	3047.4	-278.9	-15.9	321.4	-13038.9
	51	-11467.4	23633.1	278.9	15.9	1045.3	-37395.9
3	45	7690.5	8554.6	6.6	-8.5	-163.7	76.3

Comb.	Nodo	N [kg]	T1-2 [kg]	T1-3 [kg]	Mt [kgm]	M1-3 [kgm]	M1-2 [kgm]
	51	-7690.5	18125.9	-6.6	8.5	131.5	-23526.2
4	45	2805.7	15331.5	313.9	-296.6	-475.0	16083.8
	51	-2805.7	11349.0	-313.9	296.6	-1062.9	-6326.8
5	45	1945.6	10574.8	15.9	320.1	-241.7	10328.9
	51	-1945.6	8829.2	-15.9	-320.1	50.8	-6052.1
6	45	3045.2	8282.0	-29.2	512.5	-52.7	4906.6
	51	-3045.2	11122.0	29.2	-512.5	166.5	-11865.6
7	45	5186.8	7479.8	-21.8	2.2	-57.1	1368.7
	51	-5186.8	14080.2	21.8	-2.2	164.1	-17539.8
8	45	7730.2	3233.0	-175.2	-7.2	190.4	-7482.4
	51	-7730.2	16710.0	175.2	7.2	668.2	-25536.4
9	45	5212.2	6904.4	15.1	-2.2	-133.0	1261.1
	51	-5212.2	13038.6	-15.1	2.2	59.0	-16289.9
10	45	1955.7	11422.3	220.0	-194.3	-340.6	11932.7
	51	-1955.7	8520.7	-220.0	194.3	-737.3	-4823.6
11	45	1215.4	11882.1	221.8	13.1	-459.8	13078.1
	51	-1215.4	8060.9	-221.8	-13.1	-627.3	-3716.0
12	45	2507.2	9913.4	147.7	8.3	-341.0	8814.7
	51	-2507.2	9490.6	-147.7	-8.3	-383.0	-7778.7
13	45	940.4	11008.0	132.6	21.9	-280.9	11369.0
	51	-940.4	8396.0	-132.6	-21.9	-369.0	-4969.6
14	45	1352.4	11551.3	226.8	-29.1	-447.2	12697.7
	51	-1352.4	7852.7	-226.8	29.1	-664.1	-3636.1
15	45	7704.8	3808.4	-212.2	-2.8	266.3	-7374.7
	51	-7704.8	17751.6	212.2	2.8	773.3	-26786.3
16	45	2035.0	10550.4	8.0	344.1	-242.7	10271.3
	51	-2035.0	8853.6	-8.0	-344.1	79.9	-6114.3
17	45	3218.4	8070.7	-40.8	552.4	-37.3	4408.6
	51	-3218.4	11333.3	40.8	-552.4	205.3	-12403.1
1	52	18649.5	20368.9	-245.9	68.6	1289.9	16656.6
	59	-18649.5	27421.1	245.9	-68.6	886.1	-47862.9
2	52	22944.8	16266.6	-415.4	77.1	2213.5	3487.2
	59	-22944.8	27540.9	415.4	-77.1	1462.4	-53375.9
3	52	17434.7	18226.8	-259.3	59.7	1315.3	13211.9
	59	-17434.7	25580.7	259.3	-59.7	979.1	-45752.7
4	52	11004.7	21526.8	-169.8	-714.7	697.5	29293.5
	59	-11004.7	22280.7	169.8	714.7	805.4	-32629.8
5	52	7902.1	15714.0	60.0	599.7	-219.7	21470.1
	59	-7902.1	16146.0	-60.0	-599.7	-310.4	-23381.6
6	52	9921.4	14741.5	-63.7	604.2	380.0	16728.6
	59	-9921.4	17118.5	63.7	-604.2	192.4	-27249.5
7	52	13316.5	15340.8	-161.5	52.2	848.7	13563.0
	59	-13316.5	20059.2	161.5	-52.2	580.4	-34442.0
8	52	16180.0	12606.0	-274.5	57.8	1464.4	4783.4
	59	-16180.0	20139.0	274.5	-57.8	964.6	-38117.3
9	52	12506.6	13912.8	-170.4	46.2	865.6	11266.5

Comb.	Nodo	N [kg]	T1-2 [kg]	T1-3 [kg]	Mt [kgm]	M1-3 [kgm]	M1-2 [kgm]
	59	-12506.6	18832.2	170.4	-46.2	642.4	-33035.2
10	52	8220.0	16112.7	-110.8	-470.1	453.8	21987.6
	59	-8220.0	16632.3	110.8	470.1	526.6	-24286.6
11	52	7387.1	16045.4	-0.6	37.3	-56.1	21712.8
	59	-7387.1	16699.6	0.6	-37.3	61.1	-24607.3
12	52	8910.5	14896.9	-57.1	40.2	251.6	17625.6
	59	-8910.5	16963.1	57.1	-40.2	253.8	-26768.8
13	52	7620.8	15791.7	14.1	46.3	-80.6	21877.5
	59	-7620.8	16068.3	-14.1	-46.3	-44.6	-23101.2
14	52	7318.5	15598.2	-24.4	-65.4	49.4	21066.4
	59	-7318.5	16261.8	24.4	65.4	166.2	-24002.7
15	52	16989.9	14034.0	-265.5	63.8	1447.5	7079.9
	59	-16989.9	21366.0	265.5	-63.8	902.6	-39524.1
16	52	9083.0	15703.9	63.2	646.2	-229.1	21420.3
	59	-9083.0	16156.1	-63.2	-646.2	-329.7	-23421.8
17	52	10462.7	14652.3	-71.6	650.3	426.9	16291.3
	59	-10462.7	17207.7	71.6	-650.3	216.3	-27602.2
1	59	-6763.4	-4485.7	-235.1	-202.5	44.0	-6785.8
	65	6763.4	4485.7	235.1	202.5	1107.9	-15194.3
2	59	-9502.1	-9477.8	-634.8	-148.5	675.2	-17682.4
	65	9502.1	9477.8	634.8	148.5	2435.3	-28758.6
3	59	-6746.5	-4175.6	-168.1	-242.5	-61.7	-6204.5
	65	6746.5	4175.6	168.1	242.5	885.3	-14255.9
4	59	-705.5	2373.3	270.0	-280.8	-407.3	7528.7
	65	705.5	-2373.3	-270.0	280.8	-915.4	4100.4
5	59	-2320.9	1132.4	124.5	140.4	-547.1	4152.9
	65	2320.9	-1132.4	-124.5	-140.4	85.5	1397.5
6	59	-3206.3	-1077.6	-45.6	295.7	-111.9	-566.0
	65	3206.3	1077.6	45.6	-295.7	422.6	-4718.3
7	59	-4609.0	-2839.3	-144.4	-148.9	-10.7	-4009.9
	65	4609.0	2839.3	144.4	148.9	718.3	-9902.8
8	59	-6434.8	-6167.3	-410.9	-112.9	410.1	-11274.3
	65	6434.8	6167.3	410.9	112.9	1603.2	-18945.6
9	59	-4597.8	-2632.5	-99.7	-175.6	-81.2	-3622.3
	65	4597.8	2632.5	99.7	175.6	569.9	-9277.2
10	59	-570.5	1733.4	192.3	-201.1	-311.6	5533.1
	65	570.5	-1733.4	-192.3	201.1	-630.6	2960.4
11	59	-1568.3	2150.7	269.6	-211.1	-642.6	6594.4
	65	1568.3	-2150.7	-269.6	211.1	-678.2	3943.9
12	59	-2513.5	509.9	139.7	-195.2	-440.0	3037.7
	65	2513.5	-509.9	-139.7	195.2	-244.5	-539.4
13	59	-1211.6	1550.7	158.9	-144.6	-440.1	5097.9
	65	1211.6	-1550.7	-158.9	144.6	-338.5	2500.5
14	59	-1340.7	2090.0	260.3	-212.8	-584.3	6399.2
	65	1340.7	-2090.0	-260.3	212.8	-691.3	3841.8
15	59	-6446.1	-6374.1	-455.5	-86.2	480.5	-11661.9

Comb.	Nodo	N [kg]	T1-2 [kg]	T1-3 [kg]	Mt [kgm]	M1-3 [kgm]	M1-2 [kgm]
	65	6446.1	6374.1	455.5	86.2	1751.7	-19571.2
16	59	-2428.9	1109.1	124.3	-77.6	-560.2	4103.0
	65	2428.9	-1109.1	-124.3	77.6	118.6	1332.8
17	59	-3387.7	-1281.2	-62.1	-485.7	-87.4	-998.1
	65	3387.7	1281.2	62.1	485.7	488.3	-5285.4
1	53	-795.7	0.0	0.0	0.0	0.0	0.0
	60	795.7	0.0	0.0	0.0	0.0	0.0
2	53	-862.0	0.0	0.0	0.0	0.0	0.0
	60	862.0	0.0	0.0	0.0	0.0	0.0
3	53	-754.9	0.0	0.0	0.0	0.0	0.0
	60	754.9	0.0	0.0	0.0	0.0	0.0
4	53	-568.6	0.0	0.0	0.0	0.0	0.0
	60	568.6	0.0	0.0	0.0	0.0	0.0
5	53	-404.0	0.0	0.0	0.0	0.0	0.0
	60	404.0	0.0	0.0	0.0	0.0	0.0
6	53	-516.0	0.0	0.0	0.0	0.0	0.0
	60	516.0	0.0	0.0	0.0	0.0	0.0
7	53	-575.2	0.0	0.0	0.0	0.0	0.0
	60	575.2	0.0	0.0	0.0	0.0	0.0
8	53	-619.5	0.0	0.0	0.0	0.0	0.0
	60	619.5	0.0	0.0	0.0	0.0	0.0
9	53	-548.0	0.0	0.0	0.0	0.0	0.0
	60	548.0	0.0	0.0	0.0	0.0	0.0
10	53	-423.9	0.0	0.0	0.0	0.0	0.0
	60	423.9	0.0	0.0	0.0	0.0	0.0
11	53	-430.2	0.0	0.0	0.0	0.0	0.0
	60	430.2	0.0	0.0	0.0	0.0	0.0
12	53	-458.1	0.0	0.0	0.0	0.0	0.0
	60	458.1	0.0	0.0	0.0	0.0	0.0
13	53	-407.4	0.0	0.0	0.0	0.0	0.0
	60	407.4	0.0	0.0	0.0	0.0	0.0
14	53	-418.9	0.0	0.0	0.0	0.0	0.0
	60	418.9	0.0	0.0	0.0	0.0	0.0
15	53	-646.7	0.0	0.0	0.0	0.0	0.0
	60	646.7	0.0	0.0	0.0	0.0	0.0
16	53	-403.8	0.0	0.0	0.0	0.0	0.0
	60	403.8	0.0	0.0	0.0	0.0	0.0
17	53	-525.6	0.0	0.0	0.0	0.0	0.0
	60	525.6	0.0	0.0	0.0	0.0	0.0
1	60	1544.1	0.0	0.0	0.0	0.0	0.0
	66	-1544.1	0.0	0.0	0.0	0.0	0.0
2	60	1777.7	0.0	0.0	0.0	0.0	0.0
	66	-1777.7	0.0	0.0	0.0	0.0	0.0
3	60	1507.0	0.0	0.0	0.0	0.0	0.0
	66	-1507.0	0.0	0.0	0.0	0.0	0.0

Comb.	Nodo	N [kg]	T1-2 [kg]	T1-3 [kg]	Mt [kgm]	M1-3 [kgm]	M1-2 [kgm]
4	60	1063.7	0.0	0.0	0.0	0.0	0.0
	66	-1063.7	0.0	0.0	0.0	0.0	0.0
5	60	751.2	0.0	0.0	0.0	0.0	0.0
	66	-751.2	0.0	0.0	0.0	0.0	0.0
6	60	844.6	0.0	0.0	0.0	0.0	0.0
	66	-844.6	0.0	0.0	0.0	0.0	0.0
7	60	1097.9	0.0	0.0	0.0	0.0	0.0
	66	-1097.9	0.0	0.0	0.0	0.0	0.0
8	60	1253.6	0.0	0.0	0.0	0.0	0.0
	66	-1253.6	0.0	0.0	0.0	0.0	0.0
9	60	1073.1	0.0	0.0	0.0	0.0	0.0
	66	-1073.1	0.0	0.0	0.0	0.0	0.0
10	60	777.6	0.0	0.0	0.0	0.0	0.0
	66	-777.6	0.0	0.0	0.0	0.0	0.0
11	60	742.9	0.0	0.0	0.0	0.0	0.0
	66	-742.9	0.0	0.0	0.0	0.0	0.0
12	60	831.5	0.0	0.0	0.0	0.0	0.0
	66	-831.5	0.0	0.0	0.0	0.0	0.0
13	60	658.1	0.0	0.0	0.0	0.0	0.0
	66	-658.1	0.0	0.0	0.0	0.0	0.0
14	60	736.3	0.0	0.0	0.0	0.0	0.0
	66	-736.3	0.0	0.0	0.0	0.0	0.0
15	60	1278.3	0.0	0.0	0.0	0.0	0.0
	66	-1278.3	0.0	0.0	0.0	0.0	0.0
16	60	760.9	0.0	0.0	0.0	0.0	0.0
	66	-760.9	0.0	0.0	0.0	0.0	0.0
17	60	861.7	0.0	0.0	0.0	0.0	0.0
	66	-861.7	0.0	0.0	0.0	0.0	0.0
1	61	284.3	0.0	0.0	0.0	0.0	0.0
	54	-284.3	0.0	0.0	0.0	0.0	0.0
2	61	405.1	0.0	0.0	0.0	0.0	0.0
	54	-405.1	0.0	0.0	0.0	0.0	0.0
3	61	276.4	0.0	0.0	0.0	0.0	0.0
	54	-276.4	0.0	0.0	0.0	0.0	0.0
4	61	139.9	0.0	0.0	0.0	0.0	0.0
	54	-139.9	0.0	0.0	0.0	0.0	0.0
5	61	67.1	0.0	0.0	0.0	0.0	0.0
	54	-67.1	0.0	0.0	0.0	0.0	0.0
6	61	43.5	0.0	0.0	0.0	0.0	0.0
	54	-43.5	0.0	0.0	0.0	0.0	0.0
7	61	196.2	0.0	0.0	0.0	0.0	0.0
	54	-196.2	0.0	0.0	0.0	0.0	0.0
8	61	276.7	0.0	0.0	0.0	0.0	0.0
	54	-276.7	0.0	0.0	0.0	0.0	0.0
9	61	190.9	0.0	0.0	0.0	0.0	0.0
	54	-190.9	0.0	0.0	0.0	0.0	0.0

Comb.	Nodo	N [kg]	T1-2 [kg]	T1-3 [kg]	Mt [kgm]	M1-3 [kgm]	M1-2 [kgm]
10	61	99.9	0.0	0.0	0.0	0.0	0.0
	54	-99.9	0.0	0.0	0.0	0.0	0.0
11	61	62.2	0.0	0.0	0.0	0.0	0.0
	54	-62.2	0.0	0.0	0.0	0.0	0.0
12	61	103.4	0.0	0.0	0.0	0.0	0.0
	54	-103.4	0.0	0.0	0.0	0.0	0.0
13	61	60.4	0.0	0.0	0.0	0.0	0.0
	54	-60.4	0.0	0.0	0.0	0.0	0.0
14	61	68.0	0.0	0.0	0.0	0.0	0.0
	54	-68.0	0.0	0.0	0.0	0.0	0.0
15	61	281.9	0.0	0.0	0.0	0.0	0.0
	54	-281.9	0.0	0.0	0.0	0.0	0.0
16	61	66.8	0.0	0.0	0.0	0.0	0.0
	54	-66.8	0.0	0.0	0.0	0.0	0.0
17	61	40.9	0.0	0.0	0.0	0.0	0.0
	54	-40.9	0.0	0.0	0.0	0.0	0.0
1	61	-655.6	0.0	0.0	0.0	0.0	0.0
	67	655.6	0.0	0.0	0.0	0.0	0.0
2	61	-753.8	0.0	0.0	0.0	0.0	0.0
	67	753.8	0.0	0.0	0.0	0.0	0.0
3	61	-689.6	0.0	0.0	0.0	0.0	0.0
	67	689.6	0.0	0.0	0.0	0.0	0.0
4	61	-222.6	0.0	0.0	0.0	0.0	0.0
	67	222.6	0.0	0.0	0.0	0.0	0.0
5	61	-299.2	0.0	0.0	0.0	0.0	0.0
	67	299.2	0.0	0.0	0.0	0.0	0.0
6	61	-321.1	0.0	0.0	0.0	0.0	0.0
	67	321.1	0.0	0.0	0.0	0.0	0.0
7	61	-460.4	0.0	0.0	0.0	0.0	0.0
	67	460.4	0.0	0.0	0.0	0.0	0.0
8	61	-525.9	0.0	0.0	0.0	0.0	0.0
	67	525.9	0.0	0.0	0.0	0.0	0.0
9	61	-483.1	0.0	0.0	0.0	0.0	0.0
	67	483.1	0.0	0.0	0.0	0.0	0.0
10	61	-171.8	0.0	0.0	0.0	0.0	0.0
	67	171.8	0.0	0.0	0.0	0.0	0.0
11	61	-342.7	0.0	0.0	0.0	0.0	0.0
	67	342.7	0.0	0.0	0.0	0.0	0.0
12	61	-380.1	0.0	0.0	0.0	0.0	0.0
	67	380.1	0.0	0.0	0.0	0.0	0.0
13	61	-252.0	0.0	0.0	0.0	0.0	0.0
	67	252.0	0.0	0.0	0.0	0.0	0.0
14	61	-309.3	0.0	0.0	0.0	0.0	0.0
	67	309.3	0.0	0.0	0.0	0.0	0.0
15	61	-503.2	0.0	0.0	0.0	0.0	0.0
	67	503.2	0.0	0.0	0.0	0.0	0.0

Comb.	Nodo	N [kg]	T1-2 [kg]	T1-3 [kg]	Mt [kgm]	M1-3 [kgm]	M1-2 [kgm]
16	61	-303.6	0.0	0.0	0.0	0.0	0.0
	67	303.6	0.0	0.0	0.0	0.0	0.0
17	61	-328.0	0.0	0.0	0.0	0.0	0.0
	67	328.0	0.0	0.0	0.0	0.0	0.0
1	55	-52.7	0.0	0.0	0.0	0.0	0.0
	62	52.7	0.0	0.0	0.0	0.0	0.0
2	55	-6.1	0.0	0.0	0.0	0.0	0.0
	62	6.1	0.0	0.0	0.0	0.0	0.0
3	55	-57.9	0.0	0.0	0.0	0.0	0.0
	62	57.9	0.0	0.0	0.0	0.0	0.0
4	55	99.3	0.0	0.0	0.0	0.0	0.0
	62	-99.3	0.0	0.0	0.0	0.0	0.0
5	55	-197.4	0.0	0.0	0.0	0.0	0.0
	62	197.4	0.0	0.0	0.0	0.0	0.0
6	55	-188.8	0.0	0.0	0.0	0.0	0.0
	62	188.8	0.0	0.0	0.0	0.0	0.0
7	55	-41.3	0.0	0.0	0.0	0.0	0.0
	62	41.3	0.0	0.0	0.0	0.0	0.0
8	55	-10.3	0.0	0.0	0.0	0.0	0.0
	62	10.3	0.0	0.0	0.0	0.0	0.0
9	55	-44.8	0.0	0.0	0.0	0.0	0.0
	62	44.8	0.0	0.0	0.0	0.0	0.0
10	55	60.0	0.0	0.0	0.0	0.0	0.0
	62	-60.0	0.0	0.0	0.0	0.0	0.0
11	55	-81.6	0.0	0.0	0.0	0.0	0.0
	62	81.6	0.0	0.0	0.0	0.0	0.0
12	55	-67.1	0.0	0.0	0.0	0.0	0.0
	62	67.1	0.0	0.0	0.0	0.0	0.0
13	55	-63.5	0.0	0.0	0.0	0.0	0.0
	62	63.5	0.0	0.0	0.0	0.0	0.0
14	55	-53.1	0.0	0.0	0.0	0.0	0.0
	62	53.1	0.0	0.0	0.0	0.0	0.0
15	55	-6.8	0.0	0.0	0.0	0.0	0.0
	62	6.8	0.0	0.0	0.0	0.0	0.0
16	55	-210.0	0.0	0.0	0.0	0.0	0.0
	62	210.0	0.0	0.0	0.0	0.0	0.0
17	55	-200.2	0.0	0.0	0.0	0.0	0.0
	62	200.2	0.0	0.0	0.0	0.0	0.0
1	62	34.9	0.0	0.0	0.0	0.0	0.0
	68	-34.9	0.0	0.0	0.0	0.0	0.0
2	62	7.3	0.0	0.0	0.0	0.0	0.0
	68	-7.3	0.0	0.0	0.0	0.0	0.0
3	62	34.3	0.0	0.0	0.0	0.0	0.0
	68	-34.3	0.0	0.0	0.0	0.0	0.0
4	62	-27.6	0.0	0.0	0.0	0.0	0.0

Comb.	Nodo	N [kg]	T1-2 [kg]	T1-3 [kg]	Mt [kgm]	M1-3 [kgm]	M1-2 [kgm]
	68	27.6	0.0	0.0	0.0	0.0	0.0
5	62	234.4	0.0	0.0	0.0	0.0	0.0
	68	-234.4	0.0	0.0	0.0	0.0	0.0
6	62	168.6	0.0	0.0	0.0	0.0	0.0
	68	-168.6	0.0	0.0	0.0	0.0	0.0
7	62	25.6	0.0	0.0	0.0	0.0	0.0
	68	-25.6	0.0	0.0	0.0	0.0	0.0
8	62	7.1	0.0	0.0	0.0	0.0	0.0
	68	-7.1	0.0	0.0	0.0	0.0	0.0
9	62	25.1	0.0	0.0	0.0	0.0	0.0
	68	-25.1	0.0	0.0	0.0	0.0	0.0
10	62	-16.1	0.0	0.0	0.0	0.0	0.0
	68	16.1	0.0	0.0	0.0	0.0	0.0
11	62	43.3	0.0	0.0	0.0	0.0	0.0
	68	-43.3	0.0	0.0	0.0	0.0	0.0
12	62	35.2	0.0	0.0	0.0	0.0	0.0
	68	-35.2	0.0	0.0	0.0	0.0	0.0
13	62	31.8	0.0	0.0	0.0	0.0	0.0
	68	-31.8	0.0	0.0	0.0	0.0	0.0
14	62	30.5	0.0	0.0	0.0	0.0	0.0
	68	-30.5	0.0	0.0	0.0	0.0	0.0
15	62	7.5	0.0	0.0	0.0	0.0	0.0
	68	-7.5	0.0	0.0	0.0	0.0	0.0
16	62	251.0	0.0	0.0	0.0	0.0	0.0
	68	-251.0	0.0	0.0	0.0	0.0	0.0
17	62	181.0	0.0	0.0	0.0	0.0	0.0
	68	-181.0	0.0	0.0	0.0	0.0	0.0
1	56	2660.9	870.7	343.8	419.7	118.8	-9537.8
	57	-2660.9	-870.7	-343.8	-419.7	-1889.1	14021.9
2	56	4158.4	-1347.4	564.4	466.9	-183.9	-20590.0
	57	-4158.4	1347.4	-564.4	-466.9	-2722.5	13650.8
3	56	2695.4	372.5	301.5	395.4	276.4	-10881.8
	57	-2695.4	-372.5	-301.5	-395.4	-1828.9	12800.0
4	56	-560.4	3594.7	-364.6	-823.8	1623.8	6347.5
	57	560.4	-3594.7	364.6	823.8	253.9	12165.2
5	56	1096.1	1656.9	171.5	1053.3	-15.0	-246.1
	57	-1096.1	-1656.9	-171.5	-1053.3	-857.3	8625.1
6	56	1353.0	938.4	135.5	845.1	364.5	-4337.8
	57	-1353.0	-938.4	-135.5	-845.1	-958.3	9195.3
7	56	1788.3	849.6	232.8	305.8	104.4	-5928.4
	57	-1788.3	-849.6	-232.8	-305.8	-1303.4	10303.8
8	56	2786.6	-629.2	379.9	337.3	-97.3	-13296.6
	57	-2786.6	629.2	-379.9	-337.3	-1859.0	10056.4
9	56	1811.3	517.4	204.6	289.6	209.5	-6824.4
	57	-1811.3	-517.4	-204.6	-289.6	-1263.3	9489.2
10	56	-359.2	2665.6	-239.4	-523.2	1107.8	4661.8

Comb.	Nodo	N [kg]	T1-2 [kg]	T1-3 [kg]	Mt [kgm]	M1-3 [kgm]	M1-2 [kgm]
	57	359.2	-2665.6	239.4	523.2	125.3	9066.0
11	56	272.7	2380.3	-19.4	221.8	483.3	3509.4
	57	-272.7	-2380.3	19.4	-221.8	-383.5	8749.3
12	56	776.4	1680.4	54.5	239.8	385.6	-94.9
	57	-776.4	-1680.4	-54.5	-239.8	-666.5	8749.0
13	56	182.9	2453.9	21.4	221.3	277.8	4017.0
	57	-182.9	-2453.9	-21.4	-221.3	-388.0	8620.7
14	56	147.3	2339.4	-69.3	67.7	626.6	3496.8
	57	-147.3	-2339.4	69.3	-67.7	-269.6	8551.0
15	56	2763.6	-297.0	408.1	353.5	-202.4	-12400.6
	57	-2763.6	297.0	-408.1	-353.5	-1899.1	10871.0
16	56	1188.6	1590.2	186.5	1121.4	-38.2	-600.8
	57	-1188.6	-1590.2	-186.5	-1121.4	-183.8	8627.1
17	56	1469.2	814.5	147.2	896.3	381.0	-5020.6
	57	-1469.2	-814.5	-147.2	-896.3	-792.2	9249.3
1	57	1871.9	-10442.7	-672.9	-307.1	1805.5	-14260.4
	63	-1871.9	10442.7	672.9	307.1	684.1	-24377.6
2	57	2807.4	-11670.2	-1012.9	-319.5	2618.9	-13992.5
	63	-2807.4	11670.2	1012.9	319.5	1128.9	-29187.4
3	57	1920.5	-9986.7	-654.4	-299.1	1749.2	-13042.4
	63	-1920.5	9986.7	654.4	299.1	672.2	-23908.5
4	57	-400.2	-7235.3	65.9	-417.9	-256.3	-12223.2
	63	400.2	7235.3	-65.9	417.9	12.6	-14547.4
5	57	1107.5	-5225.4	-31.8	-411.8	815.4	-8701.8
	63	-1107.5	5225.4	31.8	411.8	-266.5	-10544.0
6	57	1405.4	-6426.3	-237.3	-525.2	940.7	-9327.7
	63	-1405.4	6426.3	237.3	525.2	104.0	-14478.7
7	57	1265.2	-7535.4	-459.8	-220.9	1244.0	-10468.9
	63	-1265.2	7535.4	459.8	220.9	457.1	-17412.0
8	57	1888.9	-8353.7	-686.5	-229.2	1786.3	-10290.3
	63	-1888.9	8353.7	686.5	229.2	753.7	-20618.5
9	57	1297.6	-7231.4	-447.5	-215.5	1206.5	-9656.9
	63	-1297.6	7231.4	447.5	215.5	449.2	-17099.3
10	57	-249.5	-5397.1	32.7	-294.7	-130.5	-9110.7
	63	249.5	5397.1	-32.7	294.7	9.4	-10858.6
11	57	319.0	-5409.9	-95.1	-179.2	350.5	-8810.3
	63	-319.0	5409.9	95.1	179.2	1.2	-11206.2
12	57	635.6	-5885.1	-209.8	-186.0	626.4	-8844.8
	63	-635.6	5885.1	209.8	186.0	149.9	-12929.9
13	57	211.5	-5130.6	-98.8	-157.0	355.7	-8673.0
	63	-211.5	5130.6	98.8	157.0	9.8	-10310.4
14	57	207.9	-5293.7	-66.0	-199.1	243.0	-8608.9
	63	-207.9	5293.7	66.0	199.1	1.0	-10977.9
15	57	1856.5	-8657.7	-698.8	-234.5	1823.9	-11102.3
	63	-1856.5	8657.7	698.8	234.5	761.6	-20931.3
16	57	1194.6	-5235.9	-22.9	-438.9	175.1	-8705.4

Comb.	Nodo	N [kg]	T1-2 [kg]	T1-3 [kg]	Mt [kgm]	M1-3 [kgm]	M1-2 [kgm]
	63	-1194.6	5235.9	22.9	438.9	-289.7	-10575.5
17	57	1508.2	-6532.4	-248.2	-557.7	785.7	-9386.4
	63	-1508.2	6532.4	248.2	557.7	113.6	-14824.0
1	63	-961.6	-4023.1	111.0	210.3	-384.5	-4169.2
	69	961.6	4023.1	-111.0	-210.3	-159.6	-15543.8
2	63	-1571.6	-8409.0	210.9	236.2	-625.3	-12477.9
	69	1571.6	8409.0	-210.9	-236.2	-408.0	-28726.2
3	63	-807.9	-3840.2	97.6	261.7	-361.1	-3865.4
	69	807.9	3840.2	-97.6	-261.7	-117.1	-14951.7
4	63	-548.1	3135.2	28.5	-158.8	200.2	9179.9
	69	548.1	-3135.2	-28.5	158.8	-340.0	6182.8
5	63	-367.3	-475.9	-4.4	318.0	-334.2	1069.9
	69	367.3	475.9	4.4	-318.0	281.2	-3412.3
6	63	220.0	-2015.0	99.8	285.1	-424.4	-1716.9
	69	-220.0	2015.0	-99.8	-285.1	-91.3	-8174.1
7	63	-666.1	-2505.1	73.9	138.5	-262.1	-2206.4
	69	666.1	2505.1	-73.9	-138.5	-100.1	-10068.5
8	63	-1072.7	-5429.0	140.5	155.7	-422.7	-7745.5
	69	1072.7	5429.0	-140.5	-155.7	-265.7	-18856.8
9	63	-563.6	-2383.2	65.0	172.8	-246.5	-2003.9
	69	563.6	2383.2	-65.0	-172.8	-71.8	-9673.8
10	63	-390.4	2267.1	18.9	-107.6	127.6	6693.0
	69	390.4	-2267.1	-18.9	107.6	-220.4	4415.9
11	63	38.9	1891.7	-30.7	123.6	-7.4	5893.0
	69	-38.9	-1891.7	30.7	-123.6	158.0	3376.4
12	63	-163.6	442.1	2.1	134.8	-87.5	3169.2
	69	163.6	-442.1	-2.1	-134.8	77.2	-1003.1
13	63	-134.7	1553.5	-11.0	38.5	-34.6	5038.0
	69	134.7	-1553.5	11.0	-38.5	88.6	2574.4
14	63	-27.1	1981.3	-22.2	82.1	22.6	6056.9
	69	27.1	-1981.3	22.2	-82.1	86.3	3651.5
15	63	-1175.2	-5550.9	149.5	121.5	-438.3	-7948.1
	69	1175.2	5550.9	-149.5	-121.5	-294.0	-19251.5
16	63	-393.6	-631.9	-4.5	345.1	-357.7	767.3
	69	393.6	631.9	4.5	-345.1	298.4	-3876.2
17	63	280.3	-2293.8	108.4	307.7	-455.3	-2243.3
	69	-280.3	2293.8	-108.4	-307.7	-105.1	-9018.9
1	58	-4108.7	-3646.0	-161.2	3.8	661.0	-14619.3
	64	4108.7	3646.0	161.2	-3.8	-64.5	1129.2
2	58	-6877.3	-6181.2	-271.5	9.2	1140.6	-24898.2
	64	6877.3	6181.2	271.5	-9.2	-136.2	2027.8
3	58	-4131.4	-3622.2	-165.2	6.8	674.2	-14527.8
	64	4131.4	3622.2	165.2	-6.8	-63.0	1125.5
4	58	1653.2	474.6	-139.4	-953.7	234.3	2065.7
	64	-1653.2	-474.6	139.4	953.7	281.3	-309.8

Comb.	Nodo	N [kg]	T1-2 [kg]	T1-3 [kg]	Mt [kgm]	M1-3 [kgm]	M1-2 [kgm]
5	58	-1435.2	-1215.0	51.3	656.1	-125.5	-4870.1
	64	1435.2	1215.0	-51.3	-656.1	-233.1	-84.7
6	58	-2308.8	-2476.4	-192.0	444.9	484.4	-10059.8
	64	2308.8	2476.4	192.0	-444.9	-320.6	802.1
7	58	-2734.2	-2412.9	-105.5	0.2	430.4	-9660.7
	64	2734.2	2412.9	105.5	-0.2	-40.2	732.8
8	58	-4580.0	-4103.1	-179.0	3.7	750.2	-16513.3
	64	4580.0	4103.1	179.0	-3.7	-88.0	1331.9
9	58	-2749.4	-2397.1	-108.1	2.2	439.2	-9599.7
	64	2749.4	2397.1	108.1	-2.2	-39.2	730.4
10	58	1107.0	334.1	-90.9	-638.2	146.0	1462.7
	64	-1107.0	-334.1	90.9	638.2	190.3	-226.5
11	58	15.9	144.9	4.1	-5.9	-45.2	700.9
	64	-15.9	-144.9	-4.1	5.9	30.0	-164.8
12	58	-906.6	-700.9	-32.9	-3.8	115.2	-2727.8
	64	906.6	700.9	32.9	3.8	6.4	134.4
13	58	35.9	128.3	10.9	-12.6	-65.5	631.2
	64	-35.9	-128.3	-10.9	12.6	25.2	-156.4
14	58	230.8	186.5	-15.2	-132.2	-5.6	867.4
	64	-230.8	-186.5	15.2	132.2	62.0	-177.3
15	58	-4564.8	-4118.9	-176.3	1.8	741.4	-16574.3
	64	4564.8	4118.9	176.3	-1.8	-89.0	1334.3
16	58	-1555.5	-1322.2	54.3	713.4	-129.8	-5310.4
	64	1555.5	1322.2	-54.3	-713.4	-254.3	-75.7
17	58	-2505.3	-2684.5	-209.0	483.0	530.3	-10917.2
	64	2505.3	2684.5	209.0	-483.0	-350.4	892.8
1	64	-2249.4	-3646.0	-214.8	3.8	64.5	-1129.2
	71	2249.4	3646.0	214.8	-3.8	988.0	-16736.2
2	64	-3667.8	-6181.2	-362.8	9.2	136.2	-2027.8
	71	3667.8	6181.2	362.8	-9.2	1641.8	-28260.1
3	64	-2307.3	-3622.2	-214.4	6.8	63.0	-1125.5
	71	2307.3	3622.2	214.4	-6.8	987.8	-16623.4
4	64	897.7	474.6	239.8	-953.7	-281.3	309.8
	71	-897.7	-474.6	-239.8	953.7	-893.9	2015.5
5	64	63.0	-1215.0	-207.2	656.1	233.1	84.7
	71	-63.0	1215.0	207.2	-656.1	790.1	-5583.0
6	64	-1265.1	-2476.4	-250.6	444.9	320.6	-802.1
	71	1265.1	2476.4	250.6	-444.9	928.5	-11247.7
7	64	-1503.1	-2412.9	-142.0	0.2	40.2	-732.8
	71	1503.1	2412.9	142.0	-0.2	655.5	-11090.6
8	64	-2448.7	-4103.1	-240.7	3.7	88.0	-1331.9
	71	2448.7	4103.1	240.7	-3.7	1091.4	-18773.2
9	64	-1541.7	-2397.1	-141.8	2.2	39.2	-730.4
	71	1541.7	2397.1	141.8	-2.2	655.4	-11015.5
10	64	595.0	334.1	161.1	-638.2	-190.3	226.5
	71	-595.0	-334.1	-161.1	638.2	-599.1	1410.5

Comb.	Nodo	N [kg]	T1-2 [kg]	T1-3 [kg]	Mt [kgm]	M1-3 [kgm]	M1-2 [kgm]
11	64	-118.2	144.9	7.1	-5.9	-30.0	164.8
	71	118.2	-144.9	-7.1	5.9	-4.9	545.2
12	64	-591.6	-700.9	-42.3	-3.8	-6.4	-134.4
	71	591.6	700.9	42.3	3.8	213.7	-3300.2
13	64	-50.0	128.3	7.8	-12.6	-25.2	156.4
	71	50.0	-128.3	-7.8	12.6	-13.2	472.3
14	64	17.1	186.5	38.0	-132.2	-62.0	177.3
	71	-17.1	-186.5	-38.0	132.2	-124.4	736.5
15	64	-2410.2	-4118.9	-240.9	1.8	89.0	-1334.3
	71	2410.2	4118.9	240.9	-1.8	1091.5	-18848.4
16	64	72.4	-1322.2	-224.7	713.4	254.3	75.7
	71	-72.4	1322.2	224.7	-713.4	855.5	-6065.9
17	64	-1378.4	-2684.5	-271.6	483.0	350.4	-892.8
	71	1378.4	2684.5	271.6	-483.0	1004.6	-12183.1
1	72	1669.2	-1.8	0.3	0.1	2.2	-42.2
	85	-1669.2	86.2	-0.3	-0.1	-3.2	-87.5
2	72	2887.5	-22.0	-0.3	0.4	5.3	-71.1
	85	-2887.5	106.4	0.3	-0.4	-4.3	-118.2
3	72	1697.7	-1.4	0.3	0.1	2.1	-41.7
	85	-1697.7	85.8	-0.3	-0.1	-3.1	-86.9
4	72	22.8	27.4	284.8	45.3	-391.9	-0.5
	85	-22.8	56.9	-63.6	-45.3	-122.0	-43.0
5	72	-17.4	25.6	-0.5	-0.2	0.6	6.0
	85	17.4	39.3	0.5	0.2	1.0	-26.3
6	72	454.7	16.2	0.6	0.5	-1.9	-7.3
	85	-454.7	48.7	-0.6	-0.5	-1.3	-40.5
7	72	1109.3	2.5	0.3	0.1	1.4	-26.9
	85	-1109.3	62.4	-0.3	-0.1	-2.2	-61.4
8	72	1921.5	-11.0	-0.2	0.2	3.4	-46.2
	85	-1921.5	75.9	0.2	-0.2	-2.9	-81.9
9	72	1128.3	2.8	0.3	0.1	1.3	-26.6
	85	-1128.3	62.1	-0.3	-0.1	-2.1	-61.0
10	72	11.8	22.0	190.0	30.2	-261.4	0.9
	85	-11.8	42.9	-42.5	-30.2	-81.4	-31.8
11	72	-63.7	24.4	0.9	-0.1	-1.6	4.3
	85	63.7	40.5	-0.9	0.1	-0.9	-28.1
12	72	339.5	17.5	0.6	-0.1	-0.6	-5.6
	85	-339.5	47.4	-0.6	0.1	-1.3	-38.6
13	72	-60.3	25.7	0.7	-0.1	-1.2	6.2
	85	60.3	39.2	-0.7	0.1	-0.9	-26.1
14	72	-42.5	24.1	38.7	5.9	-53.5	3.8
	85	42.5	40.8	-9.2	-5.9	-17.0	-28.6
15	72	1902.5	-11.2	-0.2	0.2	3.5	-46.6
	85	-1902.5	76.1	0.2	-0.2	-3.0	-82.3
16	72	-13.7	25.5	-0.5	-0.2	0.6	6.0
	85	13.7	39.4	0.5	0.2	1.0	-26.4

Comb.	Nodo	N [kg]	T1-2 [kg]	T1-3 [kg]	Mt [kgm]	M1-3 [kgm]	M1-2 [kgm]
17	72	498.1	15.4	0.7	0.5	-2.1	-8.4
	85	-498.1	49.5	-0.7	-0.5	-1.4	-41.8
1	85	359.0	-9.3	-0.3	-0.2	3.1	-55.7
	86	-359.0	93.6	0.3	0.2	-2.4	-96.1
2	85	968.8	-41.0	-0.4	-0.3	4.2	-102.4
	86	-968.8	125.3	0.4	0.3	-3.1	-142.9
3	85	401.1	-9.6	-0.2	-0.2	3.0	-56.2
	86	-401.1	94.0	0.2	0.2	-2.3	-96.6
4	85	-431.8	34.8	109.9	2.5	125.2	9.2
	86	431.8	49.6	111.4	-2.5	-122.9	-31.1
5	85	-138.0	30.2	0.6	0.4	-1.0	12.3
	86	138.0	34.7	-0.6	-0.4	0.8	-19.0
6	85	-5.0	16.5	0.4	-0.7	1.2	-8.0
	86	5.0	48.4	-0.4	0.7	-0.8	-39.2
7	85	217.8	-1.9	-0.2	-0.1	2.2	-35.2
	86	-217.8	66.8	0.2	0.1	-1.7	-66.3
8	85	624.4	-23.1	-0.3	-0.2	2.9	-66.3
	86	-624.4	88.0	0.3	0.2	-2.1	-97.5
9	85	245.9	-2.2	-0.2	-0.2	2.1	-35.5
	86	-245.9	67.1	0.2	0.2	-1.6	-66.6
10	85	-309.4	27.4	73.2	1.7	83.5	8.1
	86	309.4	37.5	74.3	-1.7	-82.0	-22.9
11	85	-297.4	30.0	-0.0	-0.1	0.9	11.9
	86	297.4	34.9	0.0	0.1	-0.8	-19.2
12	85	-101.5	19.4	-0.1	-0.1	1.3	-3.7
	86	101.5	45.5	0.1	0.1	-1.1	-34.9
13	85	-256.5	30.9	-0.0	-0.0	0.8	13.4
	86	256.5	34.0	0.0	0.0	-0.8	-17.8
14	85	-288.2	29.5	14.6	0.3	17.4	11.2
	86	288.2	35.4	14.9	-0.3	-17.0	-20.0
15	85	596.3	-22.8	-0.3	-0.2	3.0	-66.0
	86	-596.3	87.7	0.3	0.2	-2.2	-97.1
16	85	-128.5	30.1	-0.4	0.4	-1.0	12.2
	86	128.5	34.8	0.4	-0.4	0.8	-19.1
17	85	15.6	15.2	0.1	-0.8	1.3	-9.8
	86	-15.6	49.7	-0.1	0.8	-0.8	-41.0
1	86	-277.3	10.4	-0.6	-0.1	2.3	-27.1
	87	277.3	74.0	0.6	0.1	-0.5	-66.7
2	86	-273.9	-15.4	-0.3	-0.2	2.9	-65.9
	87	273.9	99.7	0.3	0.2	-2.1	-103.9
3	86	-259.0	9.6	-0.5	-0.1	2.2	-28.2
	87	259.0	74.7	0.5	0.1	-0.7	-67.8
4	86	-250.5	45.5	-55.9	-42.8	120.0	25.7
	87	250.5	38.9	277.2	42.8	371.3	-16.0
5	86	-63.0	35.6	1.2	0.7	-0.7	20.8

Comb.	Nodo	N [kg]	T1-2 [kg]	T1-3 [kg]	Mt [kgm]	M1-3 [kgm]	M1-2 [kgm]
	87	63.0	29.3	-1.2	-0.7	-2.8	-11.5
6	86	-128.1	25.0	0.3	-0.4	0.8	4.7
	87	128.1	39.9	-0.3	0.4	-1.3	-26.8
7	86	-186.9	11.7	-0.5	-0.0	1.6	-15.2
	87	186.9	53.2	0.5	0.0	-0.2	-46.0
8	86	-184.6	-5.5	-0.3	-0.1	2.0	-41.1
	87	184.6	70.4	0.3	0.1	-1.3	-70.8
9	86	-174.8	11.2	-0.4	-0.1	1.5	-16.0
	87	174.8	53.7	0.4	0.1	-0.4	-46.7
10	86	-169.1	35.1	-37.3	-28.5	80.1	19.9
	87	169.1	29.8	184.8	28.5	247.6	-12.2
11	86	-130.1	36.4	-0.6	0.1	0.8	21.9
	87	130.1	28.5	0.6	-0.1	1.0	-10.3
12	86	-134.3	27.9	-0.5	0.0	1.0	9.1
	87	134.3	37.0	0.5	-0.0	0.5	-22.6
13	86	-87.6	36.5	-0.6	0.1	0.8	22.1
	87	87.6	28.4	0.6	-0.1	1.0	-10.2
14	86	-131.2	36.0	-7.9	-5.7	16.7	21.3
	87	131.2	28.9	37.4	5.7	50.3	-10.9
15	86	-196.8	-5.0	-0.3	-0.1	2.1	-40.3
	87	196.8	69.9	0.3	0.1	-1.1	-70.0
16	86	-61.8	35.5	1.3	0.7	-0.8	20.7
	87	61.8	29.4	-1.3	-0.7	-3.0	-11.6
17	86	-132.5	24.0	0.4	-0.5	0.8	3.3
	87	132.5	40.9	-0.4	0.5	-1.5	-28.2
1	87	-562.9	-26.3	2.2	0.1	-8.3	-59.7
	88	562.9	96.4	-2.2	-0.1	3.0	-90.6
2	87	-782.4	-62.3	3.3	0.2	-12.6	-103.1
	88	782.4	132.4	-3.3	-0.2	4.6	-135.4
3	87	-562.5	-26.3	2.0	0.2	-8.1	-59.7
	88	562.5	96.3	-2.0	-0.2	3.2	-90.5
4	87	-215.2	23.1	222.9	6.8	-200.9	-0.1
	88	215.2	47.0	-39.2	-6.8	-120.2	-29.2
5	87	-56.4	20.0	-1.3	0.1	2.0	2.6
	88	56.4	33.9	1.3	-0.1	2.0	-19.7
6	87	-192.8	4.7	0.9	0.7	-2.8	-15.8
	88	192.8	49.2	-0.9	-0.7	1.8	-38.7
7	87	-375.5	-14.7	1.5	0.1	-5.7	-39.2
	88	375.5	68.6	-1.5	-0.1	2.0	-62.8
8	87	-521.9	-38.7	2.2	0.1	-8.6	-68.2
	88	521.9	92.6	-2.2	-0.1	3.1	-92.6
9	87	-375.3	-14.6	1.4	0.1	-5.6	-39.2
	88	375.3	68.6	-1.4	-0.1	2.1	-62.7
10	87	-143.7	18.3	148.7	4.5	-134.1	0.5
	88	143.7	35.6	-26.2	-4.5	-80.1	-21.9
11	87	-116.2	21.4	0.3	0.1	-1.1	4.3

Comb.	Nodo	N [kg]	T1-2 [kg]	T1-3 [kg]	Mt [kgm]	M1-3 [kgm]	M1-2 [kgm]
	88	116.2	32.5	-0.3	-0.1	0.4	-17.9
12	87	-193.7	9.4	0.7	0.1	-2.6	-10.2
	88	193.7	44.5	-0.7	-0.1	1.0	-32.8
13	87	-65.5	21.4	0.4	0.0	-1.2	4.4
	88	65.5	32.5	-0.4	-0.0	0.2	-17.9
14	87	-118.1	20.8	29.9	1.0	-27.7	3.6
	88	118.1	33.1	-5.4	-1.0	-15.6	-18.7
15	87	-522.1	-38.7	2.3	0.1	-8.7	-68.2
	88	522.1	92.6	-2.3	-0.1	2.9	-92.7
16	87	-56.5	19.8	-1.4	-0.4	2.1	2.5
	88	56.5	34.1	1.4	0.4	1.9	-19.9
17	87	-204.2	3.3	1.0	-0.9	-2.9	-17.4
	88	204.2	50.6	-1.0	0.9	1.8	-40.4
1	88	-1764.5	-8.1	-2.0	1.1	-2.9	-40.4
	74	1764.5	78.2	2.0	-1.1	7.8	-65.4
2	88	-2728.8	-39.2	-1.5	1.5	-4.6	-79.6
	74	2728.8	109.3	1.5	-1.5	8.2	-102.2
3	88	-1755.5	-8.2	-2.3	1.2	-3.1	-40.5
	74	1755.5	78.3	2.3	-1.2	8.8	-65.4
4	88	-433.2	32.8	-45.6	-14.8	119.8	11.2
	74	433.2	37.3	229.3	14.8	217.0	-16.8
5	88	-184.8	25.1	0.4	0.7	-2.0	8.6
	74	184.8	28.8	-0.4	-0.7	0.5	-13.1
6	88	-633.6	12.4	-0.1	1.0	-1.7	-7.4
	74	633.6	41.5	0.1	-1.0	0.5	-28.1
7	88	-1191.3	-2.1	-1.4	0.8	-1.9	-25.8
	74	1191.3	56.0	1.4	-0.8	5.4	-45.3
8	88	-1834.2	-22.8	-1.1	1.0	-3.0	-51.9
	74	1834.2	76.7	1.1	-1.0	5.7	-69.9
9	88	-1185.3	-2.1	-1.6	0.8	-2.1	-25.8
	74	1185.3	56.0	1.6	-0.8	6.1	-45.4
10	88	-303.7	25.2	-30.5	-9.8	79.9	8.6
	74	303.7	28.7	153.0	9.8	144.9	-12.9
11	88	-189.9	27.9	-1.9	0.4	-0.4	12.1
	74	189.9	26.0	1.9	-0.4	4.9	-9.7
12	88	-514.8	17.7	-1.7	0.5	-0.9	-0.8
	74	514.8	36.2	1.7	-0.5	5.2	-21.9
13	88	-159.5	26.7	-1.1	0.3	-0.1	10.6
	74	159.5	27.2	1.1	-0.3	2.9	-11.2
14	88	-208.7	27.3	-7.6	-1.6	15.6	11.3
	74	208.7	26.6	32.1	1.6	33.0	-10.5
15	88	-1840.2	-22.7	-0.9	1.0	-2.9	-51.9
	74	1840.2	76.6	0.9	-1.0	5.0	-69.9
16	88	-187.6	25.0	0.3	0.7	-1.9	8.5
	74	187.6	28.9	-0.3	-0.7	0.5	-13.2
17	88	-674.0	11.3	-0.1	1.1	-1.8	-8.9

Comb.	Nodo	N [kg]	T1-2 [kg]	T1-3 [kg]	Mt [kgm]	M1-3 [kgm]	M1-2 [kgm]
	74	674.0	42.6	0.1	-1.1	0.2	-29.5
1	89	469.2	18.3	-0.2	0.2	3.9	-32.8
	106	-469.2	104.5	0.2	-0.2	-3.2	-94.4
2	89	1022.5	-1.6	-1.1	0.5	7.6	-61.8
	106	-1022.5	124.3	1.1	-0.5	-4.5	-124.0
3	89	500.2	18.6	-0.2	0.2	3.7	-32.3
	106	-500.2	104.1	0.2	-0.2	-3.1	-93.8
4	89	-233.6	47.1	459.8	40.8	-572.1	9.2
	106	233.6	75.6	-17.3	-40.8	-131.7	-51.3
5	89	-46.7	40.5	-1.2	-0.2	1.7	13.3
	106	46.7	53.9	1.2	0.2	1.7	-33.2
6	89	62.1	31.3	0.4	0.5	-1.7	0.0
	106	-62.1	63.1	-0.4	-0.5	-1.3	-46.8
7	89	302.9	17.9	-0.1	0.1	2.5	-19.7
	106	-302.9	76.5	0.1	-0.1	-2.2	-66.9
8	89	671.8	4.6	-0.6	0.3	5.0	-39.0
	106	-671.8	89.8	0.6	-0.3	-3.1	-86.7
9	89	323.6	18.1	-0.1	0.1	2.4	-19.3
	106	-323.6	76.3	0.1	-0.1	-2.2	-66.6
10	89	-165.6	37.1	306.6	27.2	-381.5	8.3
	106	165.6	57.3	-11.6	-27.2	-87.9	-38.2
11	89	-179.1	39.3	0.7	-0.2	-1.2	11.6
	106	179.1	55.1	-0.7	0.2	-0.8	-34.9
12	89	-0.3	32.5	0.4	-0.1	0.0	1.7
	106	0.3	61.9	-0.4	0.1	-1.2	-45.0
13	89	-146.9	40.6	0.5	-0.1	-0.9	13.5
	106	146.9	53.8	-0.5	0.1	-0.8	-33.0
14	89	-167.7	39.0	61.9	5.3	-77.2	11.2
	106	167.7	55.4	-2.9	-5.3	-18.2	-35.3
15	89	651.1	4.4	-0.7	0.3	5.1	-39.3
	106	-651.1	90.0	0.7	-0.3	-3.1	-87.0
16	89	-38.8	40.4	-1.2	-0.2	1.7	13.3
	106	38.8	54.0	1.2	0.2	1.7	-33.2
17	89	79.1	30.5	0.4	0.5	-1.9	-1.2
	106	-79.1	63.9	-0.4	-0.5	-1.4	-48.0
1	106	462.8	12.1	-0.3	-0.3	3.2	-42.5
	107	-462.8	110.6	0.3	0.3	-2.2	-102.9
2	106	984.6	-18.1	-0.5	-0.4	4.5	-87.0
	107	-984.6	140.9	0.5	0.4	-3.0	-147.6
3	106	490.6	11.7	-0.3	-0.3	3.1	-43.0
	107	-490.6	111.0	0.3	0.3	-2.1	-103.5
4	106	-197.2	54.2	221.0	2.4	129.3	19.5
	107	197.2	68.6	221.5	-2.4	-128.6	-40.7
5	106	-27.1	44.9	0.8	0.3	-1.7	19.7
	107	27.1	49.6	-0.8	-0.3	1.4	-26.6

Comb.	Nodo	N [kg]	T1-2 [kg]	T1-3 [kg]	Mt [kgm]	M1-3 [kgm]	M1-2 [kgm]
6	106	75.9	31.8	0.6	-0.8	1.3	0.5
	107	-75.9	62.6	-0.6	0.8	-0.7	-46.0
7	106	301.5	14.2	-0.2	-0.2	2.2	-25.4
	107	-301.5	80.2	0.2	0.2	-1.5	-71.9
8	106	649.4	-5.9	-0.3	-0.3	3.1	-55.1
	107	-649.4	100.3	0.3	0.3	-2.1	-101.6
9	106	320.0	14.0	-0.2	-0.2	2.2	-25.7
	107	-320.0	80.4	0.2	0.2	-1.5	-72.2
10	106	-138.5	42.3	147.3	1.6	86.3	15.9
	107	138.5	52.1	147.7	-1.6	-85.8	-30.4
11	106	-153.9	44.6	-0.1	-0.1	0.8	19.4
	107	153.9	49.8	0.1	0.1	-0.6	-26.9
12	106	14.7	34.5	-0.1	-0.2	1.2	4.5
	107	-14.7	59.9	0.1	0.2	-0.9	-41.9
13	106	-121.9	45.6	-0.0	-0.1	0.8	20.8
	107	121.9	48.8	0.0	0.1	-0.6	-25.5
14	106	-142.9	44.2	29.4	0.2	17.9	18.7
	107	142.9	50.2	29.6	-0.2	-17.6	-27.6
15	106	630.8	-5.7	-0.3	-0.2	3.1	-54.7
	107	-630.8	100.1	0.3	0.2	-2.1	-101.3
16	106	-19.6	44.8	-0.5	0.3	-1.7	19.6
	107	19.6	49.6	0.5	-0.3	1.4	-26.7
17	106	91.9	30.6	0.2	-0.8	1.4	-1.3
	107	-91.9	63.8	-0.2	0.8	-0.7	-47.7
1	107	331.3	28.9	-0.6	-0.1	2.2	-17.8
	108	-331.3	93.8	0.6	0.1	-0.3	-77.8
2	107	804.9	3.2	-0.5	-0.3	2.9	-56.0
	108	-804.9	119.5	0.5	0.3	-1.4	-115.7
3	107	361.6	28.2	-0.6	-0.1	2.1	-19.0
	108	-361.6	94.6	0.6	0.1	-0.4	-79.0
4	107	-258.2	64.0	-7.7	-38.5	130.8	34.1
	108	258.2	58.7	450.2	38.5	544.6	-26.3
5	107	-68.9	49.9	2.0	0.6	-1.4	27.2
	108	68.9	44.5	-2.0	-0.6	-4.5	-19.3
6	107	22.0	39.2	0.8	-0.5	0.6	11.4
	108	-22.0	55.2	-0.8	0.5	-2.2	-34.9
7	107	210.9	26.0	-0.5	-0.1	1.5	-8.2
	108	-210.9	68.4	0.5	0.1	-0.1	-54.4
8	107	526.6	8.8	-0.4	-0.2	2.0	-33.6
	108	-526.6	85.6	0.4	0.2	-0.9	-79.6
9	107	231.1	25.5	-0.4	-0.1	1.5	-9.0
	108	-231.1	69.0	0.4	0.1	-0.2	-55.2
10	107	-182.1	49.4	-5.2	-25.7	87.3	26.4
	108	182.1	45.1	300.2	25.7	363.1	-20.0
11	107	-188.9	50.6	-0.5	0.0	0.6	28.3
	108	188.9	43.8	0.5	-0.0	0.8	-18.2

Comb.	Nodo	N [kg]	T1-2 [kg]	T1-3 [kg]	Mt [kgm]	M1-3 [kgm]	M1-2 [kgm]
12	107	-37.0	42.1	-0.4	-0.0	0.9	15.7
	108	37.0	52.3	0.4	0.0	0.4	-30.7
13	107	-152.1	50.8	-0.5	0.0	0.6	28.5
	108	152.1	43.6	0.5	-0.0	0.8	-18.0
14	107	-178.7	50.2	-1.4	-5.1	17.9	27.7
	108	178.7	44.2	60.4	5.1	73.2	-18.8
15	107	506.5	9.3	-0.4	-0.2	2.1	-32.9
	108	-506.5	85.1	0.4	0.2	-0.8	-78.9
16	107	-62.4	49.8	2.2	0.6	-1.5	27.1
	108	62.4	44.6	-2.2	-0.6	-4.8	-19.4
17	107	36.0	38.3	0.9	-0.5	0.7	10.0
	108	-36.0	56.1	-0.9	0.5	-2.4	-36.4
1	108	-776.2	-9.9	1.6	0.2	-8.1	-54.0
	109	776.2	111.8	-1.6	-0.2	4.2	-95.1
2	108	-1081.0	-45.6	2.4	0.2	-12.2	-98.0
	109	1081.0	147.5	-2.4	-0.2	6.3	-138.6
3	108	-759.2	-9.9	1.5	0.2	-8.0	-54.1
	109	759.2	111.9	-1.5	-0.2	4.4	-95.1
4	108	-306.1	39.3	357.2	6.2	-287.0	6.5
	109	306.1	62.6	10.3	-6.2	-138.1	-35.1
5	108	-132.0	32.4	-2.0	-0.4	2.7	7.7
	109	132.0	46.0	2.0	0.4	3.0	-24.4
6	108	-316.0	17.3	0.8	-0.8	-2.7	-10.9
	109	316.0	61.1	-0.8	0.8	2.7	-42.8
7	108	-526.2	-2.1	1.1	0.1	-5.5	-34.7
	109	526.2	80.5	-1.1	-0.1	2.8	-66.4
8	108	-729.4	-25.9	1.7	0.1	-8.3	-64.0
	109	729.4	104.3	-1.7	-0.1	4.2	-95.4
9	108	-514.8	-2.1	1.0	0.2	-5.5	-34.8
	109	514.8	80.5	-1.0	-0.2	3.0	-66.4
10	108	-212.8	30.7	238.2	4.2	-191.5	5.6
	109	212.8	47.7	6.8	-4.2	-92.0	-26.4
11	108	-167.0	33.7	0.2	0.1	-1.3	9.3
	109	167.0	44.7	-0.2	-0.1	0.8	-22.8
12	108	-273.4	21.8	0.5	0.1	-2.6	-5.4
	109	273.4	56.6	-0.5	-0.1	1.5	-37.3
13	108	-129.7	33.8	0.3	0.1	-1.2	9.5
	109	129.7	44.6	-0.3	-0.1	0.5	-22.6
14	108	-170.1	33.1	47.8	0.9	-39.3	8.5
	109	170.1	45.3	1.2	-0.9	-17.7	-23.5
15	108	-740.7	-25.8	1.7	0.1	-8.3	-64.0
	109	740.7	104.2	-1.7	-0.1	4.1	-95.3
16	108	-132.8	32.3	-2.0	-0.4	2.9	7.5
	109	132.8	46.1	2.0	0.4	2.9	-24.5
17	108	-332.4	15.9	0.9	-0.8	-2.9	-12.6
	109	332.4	62.5	-0.9	0.8	2.8	-44.5

Comb.	Nodo	N [kg]	T1-2 [kg]	T1-3 [kg]	Mt [kgm]	M1-3 [kgm]	M1-2 [kgm]
1	109	-628.5	9.1	-1.6	1.2	-4.2	-31.1
	95	628.5	92.8	1.6	-1.2	8.2	-71.4
2	109	-847.0	-21.2	-1.1	1.5	-6.2	-68.8
	95	847.0	123.1	1.1	-1.5	9.0	-108.1
3	109	-612.9	9.0	-2.0	1.2	-4.4	-31.3
	95	612.9	92.9	2.0	-1.2	9.3	-71.5
4	109	-273.5	49.1	-3.1	-14.1	138.1	18.4
	95	273.5	52.8	370.6	14.1	319.6	-23.0
5	109	-113.1	37.5	1.0	0.7	-3.0	13.9
	95	113.1	40.9	-1.0	-0.7	-0.3	-18.0
6	109	-256.3	25.2	0.2	1.0	-2.6	-1.4
	95	256.3	53.3	-0.2	-1.0	-0.0	-33.0
7	109	-425.7	11.1	-1.2	0.8	-2.8	-18.9
	95	425.7	67.3	1.2	-0.8	5.6	-50.0
8	109	-571.4	-9.1	-0.8	1.0	-4.2	-44.0
	95	571.4	87.6	0.8	-1.0	6.2	-74.5
9	109	-415.4	11.0	-1.4	0.8	-3.0	-19.0
	95	415.4	67.4	1.4	-0.8	6.4	-50.1
10	109	-189.1	37.7	-2.1	-9.4	92.0	14.1
	95	189.1	40.7	247.1	9.4	213.3	-17.8
11	109	-153.9	40.3	-1.7	0.4	-0.8	17.3
	95	153.9	38.1	1.7	-0.4	4.9	-14.7
12	109	-231.5	30.3	-1.5	0.6	-1.5	4.9
	95	231.5	48.1	1.5	-0.6	5.3	-26.8
13	109	-115.1	39.1	-0.9	0.3	-0.5	15.8
	95	115.1	39.3	0.9	-0.3	2.8	-16.1
14	109	-155.1	39.7	-1.8	-1.5	17.7	16.5
	95	155.1	38.7	50.8	1.5	46.7	-15.4
15	109	-581.8	-9.1	-0.5	1.0	-4.1	-43.9
	95	581.8	87.5	0.5	-1.0	5.4	-74.4
16	109	-113.7	37.4	0.9	0.7	-2.9	13.8
	95	113.7	41.0	-0.9	-0.7	-0.2	-18.1
17	109	-268.7	24.0	0.2	1.1	-2.8	-2.8
	95	268.7	54.4	-0.2	-1.1	-0.2	-34.4
1	111	205.7	18.4	-0.5	0.3	5.1	-33.2
	128	-205.7	104.4	0.5	-0.3	-3.6	-93.7
2	111	586.8	-1.4	-1.3	0.6	9.1	-62.3
	128	-586.8	124.2	1.3	-0.6	-5.2	-123.0
3	111	232.7	18.7	-0.5	0.2	5.0	-32.7
	128	-232.7	104.0	0.5	-0.2	-3.5	-93.2
4	111	-245.5	47.1	513.0	31.8	-677.2	9.2
	128	245.5	75.6	-70.5	-31.8	-183.5	-51.1
5	111	-92.2	40.5	-1.6	0.4	4.1	13.3
	128	92.2	53.9	1.6	-0.4	2.2	-33.2
6	111	-40.6	31.3	0.3	0.6	3.0	-0.2

Comb.	Nodo	N [kg]	T1-2 [kg]	T1-3 [kg]	Mt [kgm]	M1-3 [kgm]	M1-2 [kgm]
	128	40.6	63.1	-0.3	-0.6	-1.4	-46.7
7	111	128.4	17.9	-0.3	0.2	3.4	-19.9
	128	-128.4	76.5	0.3	-0.2	-2.5	-66.5
8	111	382.5	4.7	-0.8	0.4	6.0	-39.3
	128	-382.5	89.7	0.8	-0.4	-3.6	-86.0
9	111	146.4	18.1	-0.3	0.2	3.3	-19.6
	128	-146.4	76.3	0.3	-0.2	-2.4	-66.2
10	111	-172.5	37.1	342.0	21.2	-451.5	8.3
	128	172.5	57.3	-47.0	-21.2	-122.4	-38.1
11	111	-182.0	39.2	0.5	-0.2	-0.7	11.5
	128	182.0	55.2	-0.5	0.2	-0.7	-34.9
12	111	-60.8	32.5	0.2	-0.1	0.6	1.5
	128	60.8	61.9	-0.2	0.1	-1.3	-44.9
13	111	-142.9	40.6	0.4	-0.1	-0.5	13.5
	128	142.9	53.8	-0.4	0.1	-0.7	-32.9
14	111	-171.8	39.0	68.8	4.1	-90.9	11.1
	128	171.8	55.4	-9.8	-4.1	-25.0	-35.3
15	111	364.4	4.5	-0.9	0.4	6.1	-39.7
	128	-364.4	89.9	0.9	-0.4	-3.6	-86.3
16	111	-88.5	40.4	-1.6	0.5	4.2	13.2
	128	88.5	54.0	1.6	-0.5	2.2	-33.2
17	111	-32.7	30.5	0.3	0.7	3.2	-1.3
	128	32.7	63.9	-0.3	-0.7	-1.5	-47.8
1	128	261.2	12.9	-0.5	-0.4	3.6	-41.1
	129	-261.2	109.8	0.5	0.4	-2.0	-101.8
2	128	681.4	-16.7	-0.8	-0.5	5.3	-84.6
	129	-681.4	139.4	0.8	0.5	-2.9	-145.6
3	128	286.6	12.5	-0.6	-0.4	3.5	-41.7
	129	-286.6	110.2	0.6	0.4	-1.9	-102.4
4	128	-238.3	54.2	221.5	2.1	179.3	19.7
	129	238.3	68.5	221.0	-2.1	-180.2	-40.8
5	128	-79.6	44.7	-1.2	0.2	-2.2	19.6
	129	79.6	49.7	1.2	-0.2	1.9	-26.9
6	128	-16.5	31.9	-0.9	-0.8	1.4	0.8
	129	16.5	62.5	0.9	0.8	-0.5	-45.8
7	128	165.8	14.8	-0.4	-0.2	2.5	-24.5
	129	-165.8	79.6	0.4	0.2	-1.4	-71.2
8	128	445.9	-5.0	-0.6	-0.3	3.6	-53.5
	129	-445.9	99.4	0.6	0.3	-2.0	-100.3
9	128	182.7	14.5	-0.4	-0.3	2.4	-24.9
	129	-182.7	79.9	0.4	0.3	-1.3	-71.6
10	128	-167.3	42.3	147.7	1.4	119.6	16.0
	129	167.3	52.1	147.3	-1.4	-120.2	-30.5
11	128	-183.9	44.5	-0.1	-0.2	0.7	19.3
	129	183.9	49.9	0.1	0.2	-0.4	-27.2
12	128	-49.8	34.6	-0.2	-0.2	1.3	4.7

Comb.	Nodo	N [kg]	T1-2 [kg]	T1-3 [kg]	Mt [kgm]	M1-3 [kgm]	M1-2 [kgm]
	129	49.8	59.8	0.2	0.2	-0.7	-41.9
13	128	-141.8	45.5	-0.1	-0.1	0.7	20.7
	129	141.8	48.9	0.1	0.1	-0.5	-25.8
14	128	-172.4	44.1	29.5	0.1	24.5	18.6
	129	172.4	50.3	29.5	-0.1	-24.3	-27.9
15	128	429.0	-4.7	-0.5	-0.3	3.6	-53.1
	129	-429.0	99.1	0.5	0.3	-2.0	-99.9
16	128	-75.0	44.7	-0.7	0.3	-2.2	19.5
	129	75.0	49.7	0.7	-0.3	2.0	-27.0
17	128	-6.6	30.8	0.3	-0.8	1.5	-0.9
	129	6.6	63.6	-0.3	0.8	-0.6	-47.5
1	129	283.6	28.6	-0.7	-0.2	1.9	-17.9
	130	-283.6	94.1	0.7	0.2	-0.0	-78.7
2	129	726.8	2.9	-0.7	-0.3	2.8	-55.7
	130	-726.8	119.8	0.7	0.3	-0.7	-116.7
3	129	310.5	27.8	-0.6	-0.2	1.9	-19.1
	130	-310.5	94.9	0.6	0.2	-0.1	-79.8
4	129	-246.4	63.7	-59.3	-30.0	184.1	33.6
	130	246.4	59.0	501.8	30.0	643.5	-26.7
5	129	-79.3	49.6	2.8	0.5	-2.0	26.8
	130	79.3	44.8	-2.8	-0.5	-6.0	-19.6
6	129	-7.6	39.0	1.2	-0.5	0.5	11.1
	130	7.6	55.4	-1.2	0.5	-3.1	-35.4
7	129	179.8	25.7	-0.5	-0.1	1.4	-8.3
	130	-179.8	68.7	0.5	0.1	0.0	-55.0
8	129	475.3	8.6	-0.5	-0.2	1.9	-33.5
	130	-475.3	85.8	0.5	0.2	-0.4	-80.4
9	129	197.7	25.2	-0.4	-0.1	1.3	-9.1
	130	-197.7	69.2	0.4	0.1	-0.0	-55.8
10	129	-173.5	49.1	-39.6	-20.0	122.8	26.0
	130	173.5	45.3	334.6	20.0	429.0	-20.4
11	129	-191.0	50.4	-0.3	0.0	0.4	27.9
	130	191.0	44.0	0.3	-0.0	0.6	-18.5
12	129	-49.3	41.9	-0.4	-0.0	0.7	15.4
	130	49.3	52.5	0.4	0.0	0.3	-31.1
13	129	-149.5	50.5	-0.3	0.0	0.4	28.1
	130	149.5	43.9	0.3	-0.0	0.6	-18.3
14	129	-179.1	50.0	-8.2	-4.0	24.9	27.3
	130	179.1	44.4	67.2	4.0	86.2	-19.1
15	129	457.3	9.1	-0.6	-0.2	2.0	-32.8
	130	-457.3	85.3	0.6	0.2	-0.4	-79.6
16	129	-73.9	49.6	2.9	0.5	-2.0	26.7
	130	73.9	44.9	-2.9	-0.5	-6.4	-19.7
17	129	3.8	38.0	1.3	-0.6	0.5	9.7
	130	-3.8	56.4	-1.3	0.6	-3.3	-36.9

Comb.	Nodo	N [kg]	T1-2 [kg]	T1-3 [kg]	Mt [kgm]	M1-3 [kgm]	M1-2 [kgm]
1	130	-180.1	-10.1	1.1	0.3	-8.1	-54.8
	131	180.1	112.1	-1.1	-0.3	5.3	-94.9
2	130	-77.8	-46.0	1.7	0.2	-11.9	-99.2
	131	77.8	147.9	-1.7	-0.2	7.8	-138.3
3	130	-147.8	-10.3	1.1	0.3	-8.2	-55.0
	131	147.8	112.2	-1.1	-0.3	5.4	-95.1
4	130	-244.1	39.2	397.3	6.0	-332.7	6.4
	131	244.1	62.7	-29.8	-6.0	-190.5	-35.1
5	130	-120.3	32.4	-2.4	0.1	3.2	7.6
	131	120.3	46.0	2.4	-0.1	3.8	-24.3
6	130	-157.9	17.2	0.9	-0.6	-2.9	-11.2
	131	157.9	61.2	-0.9	0.6	3.4	-42.8
7	130	-127.3	-2.2	0.8	0.2	-5.5	-35.2
	131	127.3	80.6	-0.8	-0.2	3.6	-66.3
8	130	-59.1	-26.1	1.1	0.2	-8.1	-64.8
	131	59.1	104.5	-1.1	-0.2	5.3	-95.2
9	130	-105.8	-2.3	0.8	0.2	-5.6	-35.4
	131	105.8	80.7	-0.8	-0.2	3.7	-66.4
10	130	-170.0	30.7	264.9	4.0	-222.0	5.5
	131	170.0	47.7	-19.9	-4.0	-127.0	-26.4
11	130	-157.4	33.6	0.2	0.2	-1.6	9.1
	131	157.4	44.8	-0.2	-0.2	1.0	-22.9
12	130	-128.9	21.6	0.4	0.2	-2.9	-5.7
	131	128.9	56.8	-0.4	-0.2	1.9	-37.4
13	130	-126.7	33.8	0.2	0.1	-1.4	9.4
	131	126.7	44.6	-0.2	-0.1	0.8	-22.6
14	130	-151.1	33.0	53.2	1.0	-45.7	8.3
	131	151.1	45.4	-4.2	-1.0	-24.5	-23.6
15	130	-80.7	-26.0	1.2	0.1	-8.1	-64.7
	131	80.7	104.4	-1.2	-0.1	5.2	-95.1
16	130	-120.6	32.3	-2.4	0.1	3.4	7.5
	131	120.6	46.1	2.4	-0.1	3.7	-24.5
17	130	-162.6	15.8	1.0	-0.6	-3.1	-12.9
	131	162.6	62.6	-1.0	0.6	3.5	-44.4
1	131	-113.8	9.4	-1.4	1.2	-5.3	-30.5
	117	113.8	92.5	1.4	-1.2	8.7	-71.3
2	131	19.1	-20.8	-0.8	1.5	-7.8	-67.9
	117	-19.1	122.8	0.8	-1.5	9.7	-108.1
3	131	-82.4	9.2	-1.8	1.2	-5.4	-30.8
	117	82.4	92.7	1.8	-1.2	9.9	-71.5
4	131	-220.7	49.2	-49.8	-13.2	190.8	18.6
	117	220.7	52.7	417.3	13.2	381.4	-22.9
5	131	-110.0	37.5	1.6	0.7	-3.8	14.0
	117	110.0	40.9	-1.6	-0.7	-1.0	-18.1
6	131	-128.9	25.2	0.5	1.0	-3.4	-1.3
	117	128.9	53.2	-0.5	-1.0	-0.6	-33.1

Comb.	Nodo	N [kg]	T1-2 [kg]	T1-3 [kg]	Mt [kgm]	M1-3 [kgm]	M1-2 [kgm]
7	131	-82.2	11.2	-1.0	0.8	-3.6	-18.5
	117	82.2	67.2	1.0	-0.8	5.9	-50.0
8	131	6.3	-8.9	-0.5	1.0	-5.3	-43.4
	117	-6.3	87.3	0.5	-1.0	6.6	-74.5
9	131	-61.3	11.1	-1.3	0.8	-3.7	-18.7
	117	61.3	67.3	1.3	-0.8	6.8	-50.1
10	131	-153.5	37.8	-33.2	-8.8	127.1	14.2
	117	153.5	40.6	278.2	8.8	254.5	-17.7
11	131	-145.8	40.3	-1.6	0.4	-1.0	17.3
	117	145.8	38.1	1.6	-0.4	5.0	-14.7
12	131	-106.9	30.3	-1.5	0.5	-1.9	5.0
	117	106.9	48.1	1.5	-0.5	5.5	-26.8
13	131	-116.9	39.1	-0.8	0.3	-0.8	15.9
	117	116.9	39.3	0.8	-0.3	2.7	-16.1
14	131	-138.8	39.7	-8.0	-1.4	24.6	16.6
	117	138.8	38.7	57.0	1.4	55.0	-15.4
15	131	-14.6	-8.8	-0.2	1.0	-5.2	-43.2
	117	14.6	87.2	0.2	-1.0	5.8	-74.3
16	131	-110.1	37.4	1.4	0.7	-3.6	13.8
	117	110.1	41.0	-1.4	-0.7	-0.8	-18.2
17	131	-131.2	24.0	0.5	1.1	-3.5	-2.7
	117	131.2	54.4	-0.5	-1.1	-0.7	-34.5
1	132	89.0	17.8	-0.6	0.3	5.9	-33.8
	149	-89.0	104.9	0.6	-0.3	-4.2	-94.6
2	132	395.4	-2.1	-1.2	0.8	9.9	-63.0
	149	-395.4	124.8	1.2	-0.8	-6.5	-124.1
3	132	107.2	18.1	-0.5	0.3	5.8	-33.3
	149	-107.2	104.6	0.5	-0.3	-4.2	-94.2
4	132	-247.4	46.9	550.8	19.6	-751.9	8.9
	149	247.4	75.8	-108.3	-19.6	-220.4	-51.6
5	132	-127.5	40.3	-1.9	0.4	5.1	13.1
	149	127.5	54.1	1.9	-0.4	2.4	-33.4
6	132	-98.0	31.1	0.2	0.6	4.0	-0.5
	149	98.0	63.3	-0.2	-0.6	-1.5	-47.1
7	132	51.4	17.6	-0.4	0.2	3.9	-20.3
	149	-51.4	76.8	0.4	-0.2	-2.9	-67.1
8	132	255.7	4.3	-0.7	0.5	6.6	-39.8
	149	-255.7	90.1	0.7	-0.5	-4.4	-86.8
9	132	63.5	17.8	-0.3	0.2	3.8	-20.0
	149	-63.5	76.6	0.3	-0.2	-2.9	-66.8
10	132	-172.9	36.9	367.3	13.1	-501.3	8.1
	149	172.9	57.5	-72.3	-13.1	-147.0	-38.4
11	132	-189.5	39.0	0.3	-0.2	-0.2	11.2
	149	189.5	55.4	-0.3	0.2	-0.6	-35.3
12	132	-93.3	32.2	0.1	-0.1	1.1	1.2
	149	93.3	62.2	-0.1	0.1	-1.3	-45.4

Comb.	Nodo	N [kg]	T1-2 [kg]	T1-3 [kg]	Mt [kgm]	M1-3 [kgm]	M1-2 [kgm]
13	132	-140.1	40.4	0.2	-0.1	-0.1	13.3
	149	140.1	54.0	-0.2	0.1	-0.6	-33.2
14	132	-179.0	38.8	73.7	2.4	-100.4	10.8
	149	179.0	55.6	-14.7	-2.4	-29.9	-35.7
15	132	243.6	4.1	-0.8	0.5	6.7	-40.2
	149	-243.6	90.3	0.8	-0.5	-4.4	-87.1
16	132	-111.6	40.3	-1.9	0.5	5.3	13.0
	149	111.6	54.1	1.9	-0.5	2.4	-33.5
17	132	-90.6	30.3	0.2	0.7	4.2	-1.7
	149	90.6	64.1	-0.2	-0.7	-1.7	-48.3
1	149	39.5	12.3	-0.9	-0.4	4.2	-42.1
	150	-39.5	110.5	0.9	0.4	-1.7	-102.7
2	149	358.4	-17.5	-1.3	-0.5	6.5	-86.0
	150	-358.4	140.3	1.3	0.5	-2.6	-146.8
3	149	57.9	11.8	-0.9	-0.5	4.2	-42.7
	150	-57.9	110.9	0.9	0.5	-1.6	-103.4
4	149	-305.0	53.9	222.0	1.6	214.3	19.2
	150	305.0	68.8	220.5	-1.6	-216.5	-41.1
5	149	-141.9	44.6	-1.3	0.1	-2.4	19.3
	150	141.9	49.8	1.3	-0.1	2.4	-27.1
6	149	-118.1	31.6	-1.1	-0.8	1.5	0.3
	150	118.1	62.8	1.1	0.8	-0.4	-46.2
7	149	15.4	14.3	-0.6	-0.3	2.9	-25.2
	150	-15.4	80.1	0.6	0.3	-1.2	-71.8
8	149	228.0	-5.5	-0.9	-0.4	4.4	-54.4
	150	-228.0	100.0	0.9	0.4	-1.8	-101.2
9	149	27.7	14.0	-0.6	-0.3	2.9	-25.6
	150	-27.7	80.4	0.6	0.3	-1.1	-72.2
10	149	-214.2	42.1	148.0	1.1	143.0	15.7
	150	214.2	52.3	147.0	-1.1	-144.4	-30.7
11	149	-231.1	44.3	-0.1	-0.2	0.6	18.9
	150	231.1	50.1	0.1	0.2	-0.2	-27.5
12	149	-131.5	34.3	-0.3	-0.2	1.3	4.2
	150	131.5	60.1	0.3	0.2	-0.5	-42.3
13	149	-173.3	45.3	-0.1	-0.1	0.6	20.4
	150	173.3	49.1	0.1	0.1	-0.3	-26.0
14	149	-219.9	43.8	29.5	0.1	29.1	18.2
	150	219.9	50.6	29.5	-0.1	-29.0	-28.2
15	149	215.7	-5.3	-0.9	-0.3	4.4	-54.0
	150	-215.7	99.7	0.9	0.3	-1.8	-100.7
16	149	-140.0	44.5	-1.2	0.2	-2.3	19.2
	150	140.0	49.9	1.2	-0.2	2.4	-27.2
17	149	-114.0	30.5	-1.1	-0.9	1.7	-1.4
	150	114.0	63.9	1.1	0.9	-0.4	-47.9
1	150	98.0	28.1	-0.7	-0.2	1.7	-18.7

Comb.	Nodo	N [kg]	T1-2 [kg]	T1-3 [kg]	Mt [kgm]	M1-3 [kgm]	M1-2 [kgm]
	151	-98.0	94.6	0.7	0.2	0.3	-79.3
2	150	416.7	2.2	-0.9	-0.4	2.5	-56.8
	151	-416.7	120.5	0.9	0.4	-0.0	-117.6
3	150	115.9	27.3	-0.6	-0.2	1.5	-19.9
	151	-115.9	95.4	0.6	0.2	0.2	-80.6
4	150	-251.9	63.5	-95.7	-18.3	222.2	33.4
	151	251.9	59.2	538.2	18.3	712.8	-27.0
5	150	-108.2	49.5	3.3	0.3	-2.4	26.6
	151	108.2	44.9	-3.3	-0.3	-7.0	-19.8
6	150	-79.0	38.7	1.5	-0.5	0.3	10.8
	151	79.0	55.7	-1.5	0.5	-3.8	-35.8
7	150	57.1	25.4	-0.5	-0.1	1.1	-8.9
	151	-57.1	69.0	0.5	0.1	0.2	-55.5
8	150	269.6	8.1	-0.6	-0.3	1.7	-34.3
	151	-269.6	86.3	0.6	0.3	0.0	-81.0
9	150	69.0	24.8	-0.4	-0.2	1.1	-9.7
	151	-69.0	69.6	0.4	0.2	0.2	-56.3
10	150	-176.1	49.0	-63.8	-12.2	148.2	25.8
	151	176.1	45.4	358.8	12.2	475.3	-20.6
11	150	-195.2	50.2	-0.2	-0.0	0.2	27.6
	151	195.2	44.2	0.2	0.0	0.4	-18.8
12	150	-95.0	41.6	-0.3	-0.1	0.5	15.0
	151	95.0	52.8	0.3	0.1	0.3	-31.5
13	150	-144.1	50.4	-0.2	0.0	0.3	27.9
	151	144.1	44.0	0.2	-0.0	0.4	-18.5
14	150	-184.2	49.8	-12.9	-2.4	29.8	27.0
	151	184.2	44.6	71.9	2.4	95.4	-19.4
15	150	257.6	8.7	-0.6	-0.2	1.8	-33.4
	151	-257.6	85.7	0.6	0.2	0.1	-80.2
16	150	-105.9	49.4	3.4	0.3	-2.5	26.5
	151	105.9	45.0	-3.4	-0.3	-7.5	-20.0
17	150	-74.0	37.7	1.6	-0.6	0.4	9.3
	151	74.0	56.7	-1.6	0.6	-4.1	-37.2
1	151	559.5	-10.6	0.9	0.3	-8.4	-55.4
	152	-559.5	112.6	-0.9	-0.3	6.2	-95.6
2	151	1140.1	-46.7	1.1	0.3	-11.9	-100.0
	152	-1140.1	148.7	-1.1	-0.3	9.2	-139.4
3	151	610.8	-10.9	1.0	0.4	-8.7	-55.7
	152	-610.8	112.8	-1.0	-0.4	6.2	-95.9
4	151	-144.1	39.1	434.9	5.6	-375.7	6.2
	152	144.1	62.8	-67.4	-5.6	-239.7	-35.2
5	151	-83.8	32.3	-2.5	0.2	3.2	7.5
	152	83.8	46.1	2.5	-0.2	4.3	-24.4
6	151	84.7	17.0	1.1	-0.5	-3.3	-11.5
	152	-84.7	61.4	-1.1	0.5	4.0	-43.0
7	151	369.2	-2.6	0.6	0.2	-5.8	-35.6

Comb.	Nodo	N [kg]	T1-2 [kg]	T1-3 [kg]	Mt [kgm]	M1-3 [kgm]	M1-2 [kgm]
	152	-369.2	81.0	-0.6	-0.2	4.2	-66.7
8	151	756.3	-26.6	0.7	0.2	-8.1	-65.4
	152	-756.3	105.0	-0.7	-0.2	6.3	-95.9
9	151	403.5	-2.7	0.7	0.3	-6.0	-35.9
	152	-403.5	81.2	-0.7	-0.3	4.2	-66.9
10	151	-99.8	30.6	290.0	3.7	-250.7	5.4
	152	99.8	47.8	-45.0	-3.7	-159.7	-26.5
11	151	-121.2	33.4	0.5	0.3	-2.3	8.9
	152	121.2	45.0	-0.5	-0.3	1.0	-23.1
12	151	66.1	21.4	0.6	0.3	-3.5	-6.0
	152	-66.1	57.0	-0.6	-0.3	2.1	-37.7
13	151	-103.8	33.7	0.3	0.1	-1.7	9.3
	152	103.8	44.7	-0.3	-0.1	0.9	-22.7
14	151	-105.1	32.8	58.4	1.0	-52.0	8.1
	152	105.1	45.6	-9.4	-1.0	-31.1	-23.8
15	151	722.1	-26.5	0.7	0.1	-7.9	-65.2
	152	-722.1	104.9	-0.7	-0.1	6.2	-95.7
16	151	-82.3	32.2	-2.4	0.2	3.4	7.4
	152	82.3	46.2	2.4	-0.2	4.1	-24.6
17	151	100.7	15.6	1.2	-0.5	-3.5	-13.2
	152	-100.7	62.8	-1.2	0.5	4.1	-44.7
1	152	440.7	9.5	-1.3	1.1	-6.2	-30.6
	138	-440.7	92.4	1.3	-1.1	9.3	-70.9
2	152	935.3	-20.7	-0.5	1.5	-9.3	-68.1
	138	-935.3	122.7	0.5	-1.5	10.5	-107.6
3	152	493.1	9.3	-1.9	1.2	-6.2	-30.9
	138	-493.1	92.6	1.9	-1.2	10.8	-71.2
4	152	-151.2	49.2	-93.5	-11.9	240.0	18.6
	138	151.2	52.7	461.0	11.9	439.2	-22.8
5	152	-94.0	37.5	1.9	0.6	-4.3	13.9
	138	94.0	40.9	-1.9	-0.6	-0.0	-18.1
6	152	45.7	25.1	0.7	1.0	-4.0	-1.5
	138	-45.7	53.3	-0.7	-1.0	3.7	-33.1
7	152	288.5	11.3	-0.9	0.8	-4.2	-18.6
	138	-288.5	67.1	0.9	-0.8	6.4	-49.7
8	152	618.2	-8.9	-0.4	1.0	-6.3	-43.6
	138	-618.2	87.3	0.4	-1.0	7.2	-74.2
9	152	323.4	11.2	-1.3	0.8	-4.2	-18.8
	138	-323.4	67.2	1.3	-0.8	7.3	-49.9
10	152	-106.1	37.8	-62.4	-7.9	159.9	14.2
	138	106.1	40.6	307.4	7.9	293.0	-17.7
11	152	-119.5	40.3	-1.8	0.4	-1.0	17.3
	138	119.5	38.1	1.8	-0.4	5.3	-14.6
12	152	39.7	30.3	-1.5	0.5	-2.1	5.0
	138	-39.7	48.1	1.5	-0.5	5.8	-26.7
13	152	-108.6	39.1	-0.8	0.3	-0.9	15.8

Comb.	Nodo	N [kg]	T1-2 [kg]	T1-3 [kg]	Mt [kgm]	M1-3 [kgm]	M1-2 [kgm]
	138	108.6	39.3	0.8	-0.3	2.8	-16.1
14	152	-105.2	39.7	-13.9	-1.3	31.2	16.5
	138	105.2	38.7	62.9	1.3	63.0	-15.4
15	152	583.3	-8.7	0.0	1.0	-6.3	-43.4
	138	-583.3	87.1	-0.0	-1.0	6.2	-74.0
16	152	-92.8	37.4	1.6	0.7	-4.1	13.8
	138	92.8	41.0	-1.6	-0.7	0.3	-18.2
17	152	58.8	23.9	0.7	1.0	-4.1	-2.9
	138	-58.8	54.5	-0.7	-1.0	4.0	-34.5
1	153	-495.1	-2.5	-0.4	0.4	6.3	-44.1
	162	495.1	86.9	0.4	-0.4	-5.1	-87.7
2	153	-457.1	-22.5	-0.6	0.8	10.0	-73.2
	162	457.1	106.9	0.6	-0.8	-8.1	-117.7
3	153	-496.2	-2.2	-0.4	0.3	6.2	-43.6
	162	496.2	86.5	0.4	-0.3	-5.1	-87.3
4	153	-432.6	27.0	461.5	5.0	-736.8	-1.3
	162	432.6	57.4	-240.3	-5.0	-298.4	-43.6
5	153	-207.9	25.2	-2.0	0.5	-3.5	5.4
	162	207.9	39.7	2.0	-0.5	2.2	-26.8
6	153	-328.6	15.8	0.1	0.6	2.1	-8.2
	162	328.6	49.1	-0.1	-0.6	-1.8	-41.0
7	153	-343.6	2.0	-0.3	0.2	4.3	-28.2
	162	343.6	62.9	0.3	-0.2	-3.5	-61.6
8	153	-318.2	-11.3	-0.4	0.5	6.7	-47.6
	162	318.2	76.2	0.4	-0.5	-5.5	-81.5
9	153	-344.3	2.2	-0.2	0.2	4.2	-27.9
	162	344.3	62.7	0.2	-0.2	-3.5	-61.3
10	153	-301.9	21.7	307.7	3.3	-491.2	0.3
	162	301.9	43.2	-160.2	-3.3	-199.0	-32.2
11	153	-310.5	23.7	0.0	-0.2	0.4	3.4
	162	310.5	41.2	-0.0	0.2	-0.5	-29.1
12	153	-305.8	16.9	-0.0	-0.1	1.6	-6.6
	162	305.8	48.0	0.0	0.1	-1.5	-39.3
13	153	-216.6	25.3	0.1	-0.1	0.3	5.6
	162	216.6	39.6	-0.1	0.1	-0.5	-26.7
14	153	-302.5	23.5	61.6	0.5	-98.0	3.0
	162	302.5	41.4	-32.1	-0.5	-40.2	-29.4
15	153	-317.5	-11.5	-0.4	0.6	6.8	-47.9
	162	317.5	76.4	0.4	-0.6	-5.5	-81.8
16	153	-208.8	25.2	-2.0	0.6	6.3	5.4
	162	208.8	39.7	2.0	-0.6	2.2	-26.9
17	153	-339.8	14.9	0.2	0.7	5.3	-9.4
	162	339.8	50.0	-0.2	-0.7	-2.0	-42.2
1	162	-18.1	-8.8	-1.3	-0.5	5.1	-54.8
	163	18.1	93.2	1.3	0.5	-1.3	-95.7

Comb.	Nodo	N [kg]	T1-2 [kg]	T1-3 [kg]	Mt [kgm]	M1-3 [kgm]	M1-2 [kgm]
2	162	167.3	-39.5	-2.0	-0.6	8.0	-99.9
	163	-167.3	123.9	2.0	0.6	-2.2	-141.2
3	162	-17.8	-9.3	-1.3	-0.5	5.0	-55.5
	163	17.8	93.7	1.3	0.5	-1.2	-96.5
4	162	-194.6	34.2	111.8	1.1	281.8	8.5
	163	194.6	50.2	109.4	-1.1	-285.3	-32.1
5	162	-105.2	29.6	-1.4	0.0	-2.3	11.5
	163	105.2	35.3	1.4	-0.0	2.5	-19.9
6	162	-123.5	16.2	-1.2	-0.8	1.8	-8.3
	163	123.5	48.7	1.2	0.8	-0.3	-39.8
7	162	-16.1	-1.7	-0.9	-0.3	3.4	-34.6
	163	16.1	66.6	0.9	0.3	-0.9	-66.1
8	162	107.5	-22.2	-1.3	-0.4	5.4	-64.7
	163	-107.5	87.1	1.3	0.4	-1.5	-96.4
9	162	-16.0	-2.0	-0.9	-0.4	3.4	-35.1
	163	16.0	66.9	0.9	0.4	-0.8	-66.7
10	162	-133.8	27.0	74.5	0.8	187.9	7.5
	163	133.8	37.9	73.0	-0.8	-190.3	-23.7
11	162	-157.4	29.2	-0.2	-0.2	0.5	10.8
	163	157.4	35.7	0.2	0.2	-0.0	-20.5
12	162	-100.5	18.9	-0.4	-0.3	1.5	-4.3
	163	100.5	46.0	0.4	0.3	-0.3	-35.7
13	162	-101.0	30.3	-0.1	-0.1	0.5	12.6
	163	101.0	34.6	0.1	0.1	-0.2	-18.8
14	162	-148.7	28.7	14.8	-0.0	38.0	10.1
	163	148.7	36.2	14.7	0.0	-38.0	-21.2
15	162	107.3	-21.8	-1.3	-0.4	5.4	-64.2
	163	-107.3	86.7	1.3	0.4	-1.6	-95.9
16	162	-106.6	29.5	-1.2	0.0	-2.2	11.4
	163	106.6	35.4	1.2	-0.0	2.5	-20.0
17	162	-126.8	15.0	-1.3	-0.9	2.0	-10.0
	163	126.8	49.9	1.3	0.9	-0.3	-41.5
1	163	152.3	8.5	-0.7	-0.3	1.3	-29.1
	164	-152.3	75.8	0.7	0.3	0.7	-70.2
2	163	533.8	-17.7	-1.0	-0.4	2.2	-68.1
	164	-533.8	102.1	1.0	0.4	0.7	-108.7
3	163	161.7	7.6	-0.6	-0.3	1.2	-30.4
	164	-161.7	76.7	0.6	0.3	0.6	-71.5
4	163	-285.7	44.4	-226.3	-4.2	300.9	24.1
	164	285.7	40.0	447.5	4.2	693.0	-17.6
5	163	-157.5	34.8	3.6	0.1	-2.7	19.5
	164	157.5	30.1	-3.6	-0.1	-7.6	-12.6
6	163	-91.1	23.8	1.7	-0.6	0.2	3.3
	164	91.1	41.1	-1.7	0.6	-4.3	-28.6
7	163	89.7	10.4	-0.5	-0.2	0.9	-16.7
	164	-89.7	54.5	0.5	0.2	0.5	-48.4

Comb.	Nodo	N [kg]	T1-2 [kg]	T1-3 [kg]	Mt [kgm]	M1-3 [kgm]	M1-2 [kgm]
8	163	344.1	-7.1	-0.7	-0.3	1.5	-42.7
	164	-344.1	72.1	0.7	0.3	0.5	-74.1
9	163	96.0	9.8	-0.4	-0.2	0.8	-17.6
	164	-96.0	55.1	0.4	0.2	0.4	-49.3
10	163	-202.3	34.3	-150.9	-2.8	200.6	18.7
	164	202.3	30.6	298.4	2.8	462.0	-13.4
11	163	-231.7	35.5	-0.1	-0.0	-0.1	20.5
	164	231.7	29.4	0.1	0.0	0.3	-11.6
12	163	-110.5	26.8	-0.2	-0.1	0.2	7.6
	164	110.5	38.1	0.2	0.1	0.3	-24.4
13	163	-172.3	35.7	-0.1	-0.0	0.1	20.9
	164	172.3	29.2	0.1	0.0	0.3	-11.3
14	163	-219.8	35.0	-30.2	-0.6	40.1	19.9
	164	219.8	29.9	59.7	0.6	92.7	-12.2
15	163	337.8	-6.5	-0.7	-0.3	1.6	-41.8
	164	-337.8	71.4	0.7	0.3	0.6	-73.2
16	163	-157.3	34.7	3.7	0.1	-2.8	19.4
	164	157.3	30.2	-3.7	-0.1	-8.0	-12.7
17	163	-85.1	22.8	1.9	-0.6	0.2	1.8
	164	85.1	42.1	-1.9	0.6	-4.7	-30.1
1	164	1099.1	-27.5	0.9	0.3	-9.0	-62.4
	165	-1099.1	97.6	-0.9	-0.3	6.8	-90.8
2	164	1980.6	-64.3	0.6	0.3	-11.9	-107.5
	165	-1980.6	134.4	-0.6	-0.3	10.4	-135.9
3	164	1172.9	-27.9	1.2	0.4	-9.5	-62.9
	165	-1172.9	98.0	-1.2	-0.4	6.6	-91.3
4	164	-37.7	23.0	374.7	3.8	-374.5	-0.5
	165	37.7	47.0	-190.9	-3.8	-318.3	-28.9
5	164	-58.9	19.9	-2.3	0.3	2.8	2.4
	165	58.9	34.0	2.3	-0.3	4.4	-19.6
6	164	232.8	4.3	1.3	-0.4	-3.8	-16.7
	165	-232.8	49.6	-1.3	0.4	4.3	-38.7
7	164	729.4	-15.5	0.6	0.2	-6.2	-41.0
	165	-729.4	69.4	-0.6	-0.2	4.6	-62.9
8	164	1317.1	-40.0	0.4	0.2	-8.1	-71.1
	165	-1317.1	93.9	-0.4	-0.2	7.1	-93.0
9	164	778.6	-15.7	0.8	0.3	-6.5	-41.4
	165	-778.6	69.6	-0.8	-0.3	4.5	-63.2
10	164	-28.4	18.2	249.8	2.5	-249.8	0.3
	165	28.4	35.7	-127.3	-2.5	-212.1	-21.7
11	164	-57.5	21.0	1.0	0.3	-3.2	3.7
	165	57.5	32.9	-1.0	-0.3	0.8	-18.2
12	164	231.3	8.8	0.9	0.3	-4.2	-11.3
	165	-231.3	45.1	-0.9	-0.3	2.0	-33.2
13	164	-77.8	21.4	0.5	0.1	-2.1	4.2
	165	77.8	32.5	-0.5	-0.1	0.9	-17.8

Comb.	Nodo	N [kg]	T1-2 [kg]	T1-3 [kg]	Mt [kgm]	M1-3 [kgm]	M1-2 [kgm]
14	164	-37.8	20.4	50.8	0.7	-52.5	2.9
	165	37.8	33.5	-26.3	-0.7	-41.8	-18.9
15	164	1267.9	-39.8	0.3	0.1	-7.8	-70.8
	165	-1267.9	93.7	-0.3	-0.1	7.1	-92.7
16	164	-56.7	19.8	-2.2	0.3	3.0	2.2
	165	56.7	34.1	2.2	-0.3	4.2	-19.8
17	164	259.6	2.9	1.5	-0.4	-4.0	-18.5
	165	-259.6	51.0	-1.5	0.4	4.4	-40.5
1	165	1466.9	-6.6	-1.3	1.1	-6.9	-38.2
	166	-1466.9	76.7	1.3	-1.1	10.1	-63.8
2	165	2614.6	-37.4	-0.4	1.4	-10.6	-76.9
	166	-2614.6	107.4	0.4	-1.4	11.6	-100.5
3	165	1542.4	-6.9	-2.0	1.1	-6.8	-38.6
	166	-1542.4	77.0	2.0	-1.1	11.8	-64.2
4	165	-5.2	33.4	-222.6	-8.9	319.6	12.1
	166	5.2	36.6	406.4	8.9	451.0	-16.1
5	165	-20.9	25.2	2.0	0.6	-4.4	8.7
	166	20.9	28.7	-2.0	-0.6	0.0	-13.0
6	165	376.5	12.7	0.9	0.9	-4.3	-7.0
	166	-376.5	41.2	-0.9	-0.9	4.2	-28.0
7	165	980.5	-1.1	-0.9	0.7	-4.7	-24.4
	166	-980.5	55.0	0.9	-0.7	6.9	-44.3
8	165	1745.6	-21.6	-0.3	1.0	-7.2	-50.1
	166	-1745.6	75.5	0.3	-1.0	7.9	-68.8
9	165	1030.8	-1.3	-1.4	0.8	-4.7	-24.6
	166	-1030.8	55.2	1.4	-0.8	8.0	-44.6
10	165	-0.9	25.6	-148.4	-5.9	212.9	9.2
	166	0.9	28.3	270.9	5.9	300.8	-12.5
11	165	-56.0	28.2	-2.0	0.4	-0.9	12.4
	166	56.0	25.7	2.0	-0.4	5.7	-9.4
12	165	319.8	18.1	-1.7	0.5	-2.1	-0.3
	166	-319.8	35.8	1.7	-0.5	6.3	-21.5
13	165	-58.1	26.8	-0.8	0.3	-1.0	10.8
	166	58.1	27.1	0.8	-0.3	2.9	-11.0
14	165	-29.5	27.5	-31.3	-0.9	41.9	11.6
	166	29.5	26.4	55.8	0.9	64.9	-10.2
15	165	1695.3	-21.4	0.2	0.9	-7.3	-49.9
	166	-1695.3	75.3	-0.2	-0.9	6.8	-68.6
16	165	-17.6	25.1	1.7	0.7	-4.2	8.6
	166	17.6	28.8	-1.7	-0.7	0.4	-13.1
17	165	413.6	11.5	0.9	1.0	-4.4	-8.5
	166	-413.6	42.4	-0.9	-1.0	4.5	-29.4
1	167	-52.4	9821.2	-1003.6	-0.0	300.2	4852.6
	171	52.4	-9577.4	1003.6	0.0	201.6	-2.9
2	167	-63.1	7571.2	-2432.2	-0.0	987.0	3729.4

Comb.	Nodo	N [kg]	T1-2 [kg]	T1-3 [kg]	Mt [kgm]	M1-3 [kgm]	M1-2 [kgm]
	171	63.1	-7327.4	2432.2	0.0	229.1	-4.8
3	167	-55.1	7571.2	-1108.9	-0.0	337.9	3727.6
	171	55.1	-7327.4	1108.9	0.0	216.5	-2.9
4	167	51.7	7571.2	-2078.7	0.0	1481.7	3724.5
	171	-51.7	-7327.4	2078.7	-0.0	-442.4	0.1
5	167	-169.7	4787.3	-460.7	0.0	73.3	2350.6
	171	169.7	-4599.8	460.7	-0.0	164.9	-0.9
6	167	-336.9	4775.1	-109.9	0.0	-102.9	2353.2
	171	336.9	-4587.6	109.9	-0.0	174.3	-1.7
7	167	-36.9	6785.5	-624.6	-0.0	169.3	3347.8
	171	36.9	-6598.0	624.6	0.0	143.0	-2.0
8	167	-44.1	5285.5	-1577.0	-0.0	627.1	2599.1
	171	44.1	-5098.0	1577.0	0.0	161.4	-3.2
9	167	-38.8	5285.5	-694.8	-0.0	194.4	2597.8
	171	38.8	-5098.0	694.8	0.0	153.0	-2.0
10	167	32.4	5285.5	-1341.4	0.0	956.9	2595.8
	171	-32.4	-5098.0	1341.4	-0.0	-286.3	0.1
11	167	-25.7	5285.5	594.7	-0.0	-412.4	2596.0
	171	25.7	-5098.0	-594.7	0.0	115.1	-0.1
12	167	-29.6	4785.5	134.0	-0.0	-192.4	2346.6
	171	29.6	-4598.0	-134.0	0.0	125.4	-0.7
13	167	-19.8	4785.5	527.8	-0.0	-349.5	2346.0
	171	19.8	-4598.0	-527.8	0.0	85.6	-0.1
14	167	-14.2	4785.5	181.1	0.0	-126.4	2346.0
	171	14.2	-4598.0	-181.1	-0.0	35.9	-0.1
15	167	-42.3	6785.5	-1506.8	-0.0	602.0	3349.1
	171	42.3	-6598.0	1506.8	0.0	151.4	-3.2
16	167	-186.5	4788.0	-550.1	0.0	112.2	2347.0
	171	186.5	-4600.5	550.1	-0.0	172.4	-1.0
17	167	-370.4	4775.9	-173.8	0.0	-76.8	2340.6
	171	370.4	-4588.4	173.8	-0.0	183.6	-1.8
1	176	0.6	-9577.4	3971.6	0.0	-127.5	-2.9
	180	-0.6	9894.3	-3971.6	0.0	-2454.1	-6325.4
2	176	6.8	-7327.4	3298.7	0.0	-115.0	-4.6
	180	-6.8	7644.3	-3298.7	0.0	-2029.1	-4861.2
3	176	-0.2	-7327.4	5059.2	0.0	-150.1	-2.9
	180	0.2	7644.3	-5059.2	0.0	-3138.4	-4863.0
4	176	25.3	-7327.4	8648.2	0.0	95.0	0.0
	180	-25.3	7644.3	-8648.2	0.0	-5716.3	-4865.9
5	176	147.0	-4606.6	1276.9	0.0	-27.6	-0.9
	180	-147.0	4850.4	-1276.9	0.0	-783.1	-3067.5
6	176	311.9	-4614.2	1501.1	0.0	-12.6	-1.7
	180	-311.9	4858.0	-1501.1	0.0	-931.0	-3058.6
7	176	0.1	-6598.0	2742.2	0.0	-89.2	-1.9
	180	-0.1	6841.8	-2742.2	0.0	-1693.2	-4366.0
8	176	4.2	-5098.0	2293.6	0.0	-81.0	-3.1

Comb.	Nodo	N [kg]	T1-2 [kg]	T1-3 [kg]	Mt [kgm]	M1-3 [kgm]	M1-2 [kgm]
	180	-4.2	5341.8	-2293.6	0.0	-1409.9	-3389.8
9	176	-0.5	-5098.0	3467.3	0.0	-104.3	-1.9
	180	0.5	5341.8	-3467.3	0.0	-2149.4	-3391.0
10	176	16.5	-5098.0	5859.9	0.0	59.0	0.0
	180	-16.5	5341.8	-5859.9	0.0	-3868.0	-3392.9
11	176	-5.9	-5098.0	3630.7	0.0	-102.7	-0.1
	180	5.9	5341.8	-3630.7	0.0	-2257.2	-3392.8
12	176	-3.9	-4598.0	3463.0	0.0	-100.1	-0.7
	180	3.9	4841.8	-3463.0	0.0	-2150.8	-3067.2
13	176	-4.0	-4598.0	1813.9	0.0	-60.5	-0.1
	180	4.0	4841.8	-1813.9	0.0	-1118.6	-3067.8
14	176	-1.5	-4598.0	4176.2	0.0	-72.1	-0.1
	180	1.5	4841.8	-4176.2	0.0	-2642.4	-3067.8
15	176	4.8	-6598.0	1568.6	0.0	-65.9	-3.1
	180	-4.8	6841.8	-1568.6	0.0	-953.7	-4364.8
16	176	163.7	-4605.7	1278.5	0.0	-24.7	-1.0
	180	-163.7	4849.5	-1278.5	0.0	-783.0	-3073.0
17	176	345.3	-4612.3	1526.2	0.0	-8.2	-1.8
	180	-345.3	4856.0	-1526.2	0.0	-946.6	-3077.5
1	168	39.6	11118.8	-8986.9	0.0	4061.4	5495.1
	172	-39.6	-10875.1	8986.9	-0.0	432.0	3.3
2	168	36.9	8868.8	-8263.9	0.0	3599.7	4368.2
	172	-36.9	-8625.1	8263.9	-0.0	532.3	5.3
3	168	45.5	8868.8	-9613.1	0.0	4368.0	4370.2
	172	-45.5	-8625.1	9613.1	-0.0	438.5	3.3
4	168	-19.0	8868.8	-6845.5	-0.0	3653.9	4373.3
	172	19.0	-8625.1	6845.5	0.0	-231.2	0.2
5	168	-138.1	5768.3	-5038.1	-0.0	2278.0	2837.6
	172	138.1	-5580.8	5038.1	0.0	319.3	0.6
6	168	-315.1	5748.9	-4916.1	-0.0	2310.6	2828.2
	172	315.1	-5561.4	4916.1	0.0	351.1	1.2
7	168	28.4	7783.7	-6567.6	0.0	2977.6	3842.8
	172	-28.4	-7596.2	6567.6	-0.0	306.2	2.2
8	168	26.6	6283.7	-6085.6	0.0	2669.8	3091.5
	172	-26.6	-6096.2	6085.6	-0.0	373.0	3.5
9	168	32.3	6283.7	-6985.0	0.0	3182.0	3092.8
	172	-32.3	-6096.2	6985.0	-0.0	310.5	2.2
10	168	-10.7	6283.7	-5140.0	-0.0	2705.9	3094.9
	172	10.7	-6096.2	5140.0	0.0	-136.0	0.1
11	168	31.8	6283.7	-7052.1	0.0	3332.5	3094.8
	172	-31.8	-6096.2	7052.1	-0.0	193.5	0.2
12	168	31.3	5783.7	-6884.0	0.0	3213.2	2844.1
	172	-31.3	-5596.2	6884.0	-0.0	228.8	0.8
13	168	21.6	5783.7	-5538.8	0.0	2604.4	2844.9
	172	-21.6	-5596.2	5538.8	-0.0	164.9	0.1
14	168	23.8	5783.7	-6694.9	-0.0	3220.4	2844.8

Comb.	Nodo	N [kg]	T1-2 [kg]	T1-3 [kg]	Mt [kgm]	M1-3 [kgm]	M1-2 [kgm]
	172	-23.8	-5596.2	6694.9	0.0	127.0	0.2
15	168	22.7	7783.7	-5668.1	0.0	2465.4	3841.5
	172	-22.7	-7596.2	5668.1	-0.0	368.7	3.5
16	168	-153.4	5766.6	-5022.2	-0.0	2263.7	2836.8
	172	153.4	-5579.1	5022.2	0.0	332.5	0.7
17	168	-346.3	5744.3	-4886.4	-0.0	2297.0	2826.0
	172	346.3	-5556.8	4886.4	0.0	366.7	1.4
1	177	21.8	-10875.1	-3167.7	0.0	208.4	2.7
	181	-21.8	11192.0	3167.7	0.0	1850.6	-7174.5
2	177	19.3	-8625.1	-3542.0	0.0	237.7	4.8
	181	-19.3	8942.0	3542.0	0.0	2064.6	-5714.1
3	177	26.7	-8625.1	-3928.8	0.0	247.8	2.9
	181	-26.7	8942.0	3928.8	0.0	2305.8	-5712.2
4	177	-4.8	-8625.1	-3927.8	0.0	303.0	-0.2
	181	4.8	8942.0	3927.8	0.0	2250.1	-5709.1
5	177	158.9	-5621.9	-224.2	0.0	34.9	0.4
	181	-158.9	5865.6	224.2	0.0	79.6	-3733.1
6	177	329.1	-5658.3	-665.0	0.0	97.1	1.0
	181	-329.1	5902.0	665.0	0.0	337.7	-3756.6
7	177	15.1	-7596.2	-2100.7	0.0	141.0	1.8
	181	-15.1	7840.0	2100.7	0.0	1224.5	-5018.6
8	177	13.4	-6096.2	-2350.2	0.0	160.5	3.2
	181	-13.4	6340.0	2350.2	0.0	1367.2	-4045.0
9	177	18.4	-6096.2	-2608.1	0.0	167.2	1.9
	181	-18.4	6340.0	2608.1	0.0	1528.0	-4043.7
10	177	-2.7	-6096.2	-2607.4	0.0	204.0	-0.1
	181	2.7	6340.0	2607.4	0.0	1490.8	-4041.7
11	177	18.2	-6096.2	-1898.9	0.0	119.8	-0.1
	181	-18.2	6340.0	1898.9	0.0	1114.4	-4041.7
12	177	17.7	-5596.2	-2060.8	0.0	131.6	0.6
	181	-17.7	5840.0	2060.8	0.0	1207.9	-3717.4
13	177	9.6	-5596.2	-655.4	0.0	54.5	-0.1
	181	-9.6	5840.0	655.4	0.0	371.5	-3716.7
14	177	14.4	-5596.2	-2112.3	0.0	140.3	-0.0
	181	-14.4	5840.0	2112.3	0.0	1232.7	-3716.7
15	177	10.2	-7596.2	-1842.8	0.0	134.2	3.1
	181	-10.2	7840.0	1842.8	0.0	1063.6	-5019.9
16	177	173.3	-5622.7	-214.5	0.0	33.8	0.5
	181	-173.3	5866.5	214.5	0.0	70.6	-3733.6
17	177	358.5	-5660.8	-697.7	0.0	101.7	1.1
	181	-358.5	5904.6	697.7	0.0	355.6	-3758.1
1	169	332.6	1753.2	9874.6	-0.0	-4105.8	833.9
	173	-332.6	-1509.5	-9874.6	0.0	-831.5	-18.2
2	169	497.2	1753.1	10555.7	-0.0	-4128.9	840.4
	173	-497.2	-1509.4	-10555.7	0.0	-1148.9	-24.8

Comb.	Nodo	N [kg]	T1-2 [kg]	T1-3 [kg]	Mt [kgm]	M1-3 [kgm]	M1-2 [kgm]
3	169	330.6	1753.5	10627.6	-0.0	-4445.6	834.0
	173	-330.6	-1509.7	-10627.6	0.0	-868.2	-18.2
4	169	44.3	1759.4	8690.3	-0.0	-4007.5	824.3
	173	-44.3	-1515.7	-8690.3	0.0	-337.6	-5.5
5	169	104.8	1342.1	4920.9	0.0	-2101.2	633.9
	173	-104.8	-1154.6	-4920.9	-0.0	-284.1	-9.7
6	169	143.6	1338.3	5158.9	0.0	-1855.7	640.6
	173	-143.6	-1150.8	-5158.9	-0.0	-373.8	-12.5
7	169	229.3	1348.7	7102.1	-0.0	-2976.7	640.3
	173	-229.3	-1161.2	-7102.1	0.0	-574.4	-12.8
8	169	339.1	1348.6	7556.2	-0.0	-2992.1	644.7
	173	-339.1	-1161.1	-7556.2	0.0	-786.0	-17.2
9	169	228.0	1348.8	7604.1	-0.0	-3203.2	640.4
	173	-228.0	-1161.3	-7604.1	0.0	-598.8	-12.9
10	169	37.1	1352.8	6312.6	-0.0	-2911.1	633.9
	173	-37.1	-1165.3	-6312.6	0.0	-245.1	-4.4
11	169	60.9	1349.0	6402.0	-0.0	-2940.7	633.7
	173	-60.9	-1161.5	-6402.0	0.0	-260.3	-6.1
12	169	116.1	1349.0	6686.9	-0.0	-2975.0	635.9
	173	-116.1	-1161.5	-6686.9	0.0	-368.4	-8.3
13	169	60.0	1348.9	4927.3	-0.0	-2269.7	633.3
	173	-60.0	-1161.4	-4927.3	0.0	-193.9	-5.8
14	169	55.7	1349.8	6438.2	-0.0	-2958.8	633.8
	173	-55.7	-1162.3	-6438.2	0.0	-260.2	-5.7
15	169	340.4	1348.5	7054.2	-0.0	-2765.5	644.6
	173	-340.4	-1161.0	-7054.2	0.0	-761.6	-17.2
16	169	111.1	1341.6	4956.2	-0.0	-2091.2	634.0
	173	-111.1	-1154.1	-4956.2	0.0	-301.1	-10.0
17	169	157.6	1337.5	5222.5	-0.0	-1805.3	641.1
	173	-157.6	-1150.0	-5222.5	0.0	-404.2	-13.1
1	178	4.1	-1946.5	-1609.9	0.0	224.6	0.9
	182	-4.1	2263.4	1609.9	0.0	821.8	-1369.1
2	178	12.5	-1946.5	-930.5	0.0	306.8	1.4
	182	-12.5	2263.4	930.5	0.0	298.0	-1369.6
3	178	0.8	-1946.5	-2034.7	0.0	243.3	0.7
	182	-0.8	2263.4	2034.7	0.0	1079.2	-1368.9
4	178	5.8	-1946.5	-3297.1	0.0	163.7	0.1
	182	-5.8	2263.4	3297.1	0.0	1979.4	-1368.3
5	178	7.8	-1504.6	-1036.3	0.0	32.4	-0.1
	182	-7.8	1748.3	1036.3	0.0	516.9	-1057.0
6	178	122.4	-1510.5	-1298.6	0.0	172.0	0.4
	182	-122.4	1754.2	1298.6	0.0	431.8	-1060.6
7	178	2.8	-1497.3	-1171.0	0.0	152.2	0.6
	182	-2.8	1741.1	1171.0	0.0	609.0	-1053.0
8	178	8.4	-1497.3	-718.1	0.0	207.0	0.9
	182	-8.4	1741.1	718.1	0.0	259.8	-1053.4

Comb.	Nodo	N [kg]	T1-2 [kg]	T1-3 [kg]	Mt [kgm]	M1-3 [kgm]	M1-2 [kgm]
9	178	0.6	-1497.3	-1454.2	0.0	164.6	0.4
	182	-0.6	1741.1	1454.2	0.0	780.6	-1052.9
10	178	3.9	-1497.3	-2295.8	0.0	111.6	0.0
	182	-3.9	1741.1	2295.8	0.0	1380.7	-1052.5
11	178	-6.9	-1497.3	-1919.1	0.0	72.3	-0.2
	182	6.9	1741.1	1919.1	0.0	1175.1	-1052.3
12	178	-4.2	-1497.3	-1716.5	0.0	100.9	-0.0
	182	4.2	1741.1	1716.5	0.0	1014.9	-1052.5
13	178	-2.1	-1497.3	-1189.6	0.0	39.4	-0.2
	182	2.1	1741.1	1189.6	0.0	733.8	-1052.3
14	178	-5.1	-1497.3	-2032.0	0.0	81.8	-0.2
	182	5.1	1741.1	2032.0	0.0	1239.0	-1052.3
15	178	10.6	-1497.3	-434.9	0.0	194.5	1.0
	182	-10.6	1741.1	434.9	0.0	88.1	-1053.5
16	178	8.6	-1505.1	-1039.9	0.0	31.9	-0.1
	182	-8.6	1748.9	1039.9	0.0	504.6	-1057.3
17	178	132.9	-1512.1	-1335.4	0.0	183.2	0.4
	182	-132.9	1755.9	1335.4	0.0	405.4	-1061.6
1	170	-319.8	1328.2	130.5	13.3	-6.1	586.1
	174	319.8	-1084.5	-127.8	-13.3	-58.5	17.1
2	170	-471.1	1328.1	155.0	13.7	-5.8	579.6
	174	471.1	-1084.3	-152.3	-13.7	-71.1	23.5
3	170	-321.0	1328.2	109.0	12.7	-6.1	585.9
	174	321.0	-1084.5	-106.4	-12.7	-47.7	17.3
4	170	-77.1	1320.7	248.5	-5.3	-7.0	595.5
	174	77.1	-1077.0	-245.8	5.3	-116.6	3.9
5	170	-67.9	1025.4	37.9	21.3	-4.8	458.6
	174	67.9	-838.0	-35.8	-21.3	-13.5	10.0
6	170	-188.9	1016.9	92.0	15.6	-4.7	454.0
	174	188.9	-829.4	-89.9	-15.6	-40.4	13.0
7	170	-220.7	1021.7	101.3	10.1	-4.8	451.9
	174	220.7	-834.2	-99.3	-10.1	-45.4	12.1
8	170	-321.6	1021.6	117.6	10.4	-4.5	447.6
	174	321.6	-834.1	-115.6	-10.4	-53.8	16.3
9	170	-221.5	1021.7	87.0	9.7	-4.8	451.7
	174	221.5	-834.2	-84.9	-9.7	-38.2	12.2
10	170	-58.9	1016.7	180.0	-2.3	-5.3	458.2
	174	58.9	-829.2	-177.9	2.3	-84.1	3.3
11	170	-67.0	1021.7	66.7	9.2	-5.1	458.3
	174	67.0	-834.2	-64.6	-9.2	-27.7	5.7
12	170	-117.8	1021.7	74.4	9.3	-5.0	456.1
	174	117.8	-834.2	-72.3	-9.3	-31.7	7.8
13	170	-61.8	1021.6	95.0	9.6	-5.1	458.6
	174	61.8	-834.1	-92.9	-9.6	-41.9	5.3
14	170	-65.3	1020.7	86.9	6.8	-5.1	458.2
	174	65.3	-833.2	-84.8	-6.8	-37.8	5.2

Comb.	Nodo	N [kg]	T1-2 [kg]	T1-3 [kg]	Mt [kgm]	M1-3 [kgm]	M1-2 [kgm]
15	170	-320.8	1021.6	132.0	10.8	-4.5	447.7
	174	320.8	-834.1	-129.9	-10.8	-60.9	16.2
16	170	-68.5	1025.8	32.3	22.2	-4.8	458.6
	174	68.5	-838.3	-30.2	-22.2	-10.7	10.4
17	170	-199.3	1016.9	91.3	16.1	-4.7	453.6
	174	199.3	-829.4	-89.3	-16.1	-40.1	13.6
1	179	-26.5	-648.8	806.0	0.0	58.9	-0.7
	183	26.5	965.7	-806.0	0.0	-582.8	-524.0
2	179	-38.7	-648.8	1173.8	0.0	100.4	-1.6
	183	38.7	965.7	-1173.8	0.0	-863.3	-523.1
3	179	-27.3	-648.8	904.2	0.0	57.4	-0.7
	183	27.3	965.7	-904.2	0.0	-645.1	-524.0
4	179	-26.2	-648.8	-1423.2	0.0	51.9	0.1
	183	26.2	965.7	1423.2	0.0	873.2	-524.8
5	179	-2.7	-498.6	551.7	0.0	4.7	0.6
	183	2.7	742.4	-551.7	0.0	-406.5	-403.6
6	179	-11.6	-502.7	368.3	0.0	127.2	-0.1
	183	11.6	746.5	-368.3	0.0	-350.3	-406.3
7	179	-18.0	-499.1	529.5	0.0	38.7	-0.4
	183	18.0	742.8	-529.5	0.0	-382.9	-403.2
8	179	-26.0	-499.1	774.7	0.0	66.4	-1.0
	183	26.0	742.8	-774.7	0.0	-569.9	-402.6
9	179	-18.4	-499.1	595.0	0.0	37.7	-0.4
	183	18.4	742.8	-595.0	0.0	-424.5	-403.2
10	179	-17.7	-499.1	-956.7	0.0	34.1	0.1
	183	17.7	742.8	956.7	0.0	587.8	-403.7
11	179	-5.4	-499.1	187.3	0.0	-4.3	0.4
	183	5.4	742.8	-187.3	0.0	-117.4	-404.0
12	179	-9.6	-499.1	314.3	0.0	9.6	0.1
	183	9.6	742.8	-314.3	0.0	-213.9	-403.8
13	179	-3.5	-499.1	31.1	0.0	-3.4	0.4
	183	3.5	742.8	-31.1	0.0	-16.8	-404.0
14	179	-7.9	-499.1	-31.9	0.0	3.1	0.3
	183	7.9	742.8	31.9	0.0	17.7	-404.0
15	179	-25.6	-499.1	709.1	0.0	67.4	-1.0
	183	25.6	742.8	-709.1	0.0	-528.3	-402.6
16	179	-2.7	-498.7	605.7	0.0	5.3	0.6
	183	2.7	742.4	-605.7	0.0	-445.4	-403.5
17	179	-12.7	-503.4	403.6	0.0	137.8	-0.2
	183	12.7	747.1	-403.6	0.0	-381.7	-406.8
1	184	3172.4	-1261.8	-74.3	-19.3	464.3	-2646.0
	195	-3172.4	1261.8	74.3	19.3	-245.2	-1076.3
2	184	4904.6	-1521.6	-109.8	-8.5	707.3	-3343.5
	195	-4904.6	1521.6	109.8	8.5	-383.5	-1145.3
3	184	3135.7	-1256.2	-76.2	-16.9	468.7	-2652.6

Comb.	Nodo	N [kg]	T1-2 [kg]	T1-3 [kg]	Mt [kgm]	M1-3 [kgm]	M1-2 [kgm]
	195	-3135.7	1256.2	76.2	16.9	-244.0	-1053.3
4	184	180.4	-791.4	2255.6	-2525.9	-4410.0	-1479.0
	195	-180.4	791.4	-2255.6	2525.9	-2244.0	-855.7
5	184	215.3	-389.1	-28.2	-58.2	33.0	-714.3
	195	-215.3	389.1	28.2	58.2	25.0	-434.1
6	184	970.2	-593.2	-42.3	-11.3	209.1	-1188.1
	195	-970.2	593.2	42.3	11.3	-93.8	-568.4
7	184	2120.3	-877.6	-50.6	-14.9	315.5	-1829.5
	195	-2120.3	877.6	50.6	14.9	-166.3	-759.5
8	184	3275.1	-1050.8	-74.3	-7.6	477.5	-2294.5
	195	-3275.1	1050.8	74.3	7.6	-258.4	-805.5
9	184	2095.9	-873.9	-51.8	-13.3	318.4	-1833.9
	195	-2095.9	873.9	51.8	13.3	-165.5	-744.1
10	184	125.7	-564.0	1502.7	-1685.9	-2934.1	-1051.5
	195	-125.7	564.0	-1502.7	1685.9	-1498.8	-612.4
11	184	267.9	-524.5	-14.8	-21.0	69.0	-972.7
	195	-267.9	524.5	14.8	21.0	-25.2	-574.5
12	184	856.0	-621.1	-26.8	-17.7	150.7	-1223.4
	195	-856.0	621.1	26.8	17.7	-71.5	-608.7
13	184	183.7	-415.0	-10.9	-19.4	56.0	-754.8
	195	-183.7	415.0	10.9	19.4	-23.9	-469.4
14	184	226.1	-523.7	288.6	-353.4	-531.6	-974.8
	195	-226.1	523.7	-288.6	353.4	-319.6	-570.1
15	184	3299.6	-1054.5	-73.0	-9.3	474.6	-2290.1
	195	-3299.6	1054.5	73.0	9.3	-259.2	-820.8
16	184	219.0	-389.0	-29.6	-61.7	31.1	-714.8
	195	-219.0	389.0	29.6	61.7	28.9	-433.4
17	184	1037.8	-611.8	-45.1	-10.7	223.8	-1230.7
	195	-1037.8	611.8	45.1	10.7	-100.8	-582.1
1	195	2757.5	-790.3	-72.1	-32.4	245.3	-884.3
	196	-2757.5	790.3	72.1	32.4	-32.7	-1446.9
2	195	4313.1	-1289.1	-105.9	-32.6	383.6	-1700.2
	196	-4313.1	1289.1	105.9	32.6	-71.2	-2102.6
3	195	2719.4	-800.5	-73.5	-33.9	244.2	-913.3
	196	-2719.4	800.5	73.5	33.9	-27.2	-1448.2
4	195	30.3	-100.1	151.9	-47.6	2256.4	200.8
	196	-30.3	100.1	-151.9	47.6	-2704.5	-496.1
5	195	147.6	-32.8	-3.8	-45.7	-24.9	138.2
	196	-147.6	32.8	3.8	45.7	31.9	-233.8
6	195	821.5	-244.9	-38.2	-52.5	94.0	-182.8
	196	-821.5	244.9	38.2	52.5	-9.9	-539.5
7	195	1838.0	-528.1	-49.1	-23.2	166.4	-572.6
	196	-1838.0	528.1	49.1	23.2	-21.4	-985.3
8	195	2875.0	-860.6	-71.7	-23.4	258.5	-1116.5
	196	-2875.0	860.6	71.7	23.4	-47.1	-1422.4
9	195	1812.5	-534.9	-50.1	-24.2	165.6	-591.9

Comb.	Nodo	N [kg]	T1-2 [kg]	T1-3 [kg]	Mt [kgm]	M1-3 [kgm]	M1-2 [kgm]
	196	-1812.5	534.9	50.1	24.2	-17.8	-986.2
10	195	19.8	-68.0	100.2	-33.3	1507.1	150.8
	196	-19.8	68.0	-100.2	33.3	-1802.6	-351.5
11	195	177.0	-32.8	-14.7	-21.4	25.3	189.2
	196	-177.0	32.8	14.7	21.4	17.9	-285.9
12	195	704.4	-199.4	-26.1	-21.7	71.7	-78.9
	196	-704.4	199.4	26.1	21.7	5.4	-509.4
13	195	114.7	-17.5	-11.0	-16.5	24.0	175.4
	196	-114.7	17.5	11.0	16.5	8.6	-227.0
14	195	133.4	-40.9	8.2	-23.7	321.4	174.6
	196	-133.4	40.9	-8.2	23.7	-345.7	-295.2
15	195	2900.5	-853.8	-70.7	-22.4	259.3	-1097.2
	196	-2900.5	853.8	70.7	22.4	-50.7	-1421.5
16	195	150.9	-34.3	-3.2	-48.3	-28.8	135.4
	196	-150.9	34.3	3.2	48.3	33.7	-235.3
17	195	881.9	-264.1	-40.8	-55.6	101.1	-212.3
	196	-881.9	264.1	40.8	55.6	-11.4	-566.4
1	196	2489.4	-129.9	-73.1	-35.9	33.0	83.7
	197	-2489.4	129.9	73.1	35.9	182.8	-467.0
2	196	3834.6	-582.0	-106.9	-39.6	71.5	-298.4
	197	-3834.6	582.0	106.9	39.6	244.0	-1418.6
3	196	2443.5	-155.6	-74.7	-38.9	27.5	51.8
	197	-2443.5	155.6	74.7	38.9	192.9	-511.0
4	196	50.1	446.9	-1959.8	2407.6	2692.1	554.2
	197	-50.1	-446.9	1959.8	-2407.6	3089.3	764.3
5	196	170.1	266.3	11.9	-41.1	-31.8	317.7
	197	-170.1	-266.3	-11.9	41.1	3.1	468.4
6	196	764.2	96.4	-34.8	-52.6	9.8	177.0
	197	-764.2	-96.4	34.8	52.6	126.3	105.6
7	196	1662.5	-57.3	-49.9	-25.2	21.6	89.7
	197	-1662.5	57.3	49.9	25.2	125.6	-258.6
8	196	2559.3	-358.7	-72.4	-27.7	47.3	-165.0
	197	-2559.3	358.7	72.4	27.7	166.4	-893.0
9	196	1631.9	-74.4	-51.0	-27.3	18.0	68.4
	197	-1631.9	74.4	51.0	27.3	132.3	-288.0
10	196	36.2	327.3	-1307.7	1603.7	1794.4	403.3
	197	-36.2	-327.3	1307.7	-1603.7	2063.3	562.2
11	196	202.7	328.3	-15.5	-21.1	-17.8	389.1
	197	-202.7	-328.3	15.5	21.1	63.5	579.5
12	196	660.5	183.1	-26.9	-22.6	-5.3	268.5
	197	-660.5	-183.1	26.9	22.6	84.8	271.7
13	196	143.5	292.2	-11.6	-14.7	-8.5	343.9
	197	-143.5	-292.2	11.6	14.7	42.9	518.1
14	196	155.9	320.3	-274.0	303.6	344.1	382.2
	197	-155.9	-320.3	274.0	-303.6	464.1	562.7
15	196	2589.9	-341.5	-71.4	-25.7	50.9	-143.8

Comb.	Nodo	N [kg]	T1-2 [kg]	T1-3 [kg]	Mt [kgm]	M1-3 [kgm]	M1-2 [kgm]
	197	-2589.9	341.5	71.4	25.7	159.6	-863.7
16	196	172.9	264.7	13.8	-42.9	-33.6	316.1
	197	-172.9	-264.7	-13.8	42.9	-0.6	465.4
17	196	817.3	79.9	-37.1	-55.8	11.3	162.4
	197	-817.3	-79.9	37.1	55.8	134.0	71.4
1	197	8499.7	-1522.3	-58.8	-43.2	-228.7	-2276.1
	198	-8499.7	1522.3	58.8	43.2	372.7	-1453.5
2	197	13439.4	-2197.8	-91.9	-36.0	-297.5	-3412.5
	198	-13439.4	2197.8	91.9	36.0	522.6	-1972.1
3	197	8552.0	-1524.4	-58.0	-52.7	-245.5	-2269.8
	198	-8552.0	1524.4	58.0	52.7	387.5	-1464.9
4	197	1119.1	-540.7	210.5	-824.6	19.6	-688.6
	198	-1119.1	540.7	-210.5	824.6	-535.2	-636.2
5	197	859.6	-315.8	4.2	35.7	-95.7	-436.0
	198	-859.6	315.8	-4.2	-35.7	52.8	-337.3
6	197	2888.3	-613.9	-35.2	14.6	-118.7	-917.9
	198	-2888.3	613.9	35.2	-14.6	145.0	-586.4
7	197	5741.3	-1047.1	-40.0	-30.4	-156.8	-1564.8
	198	-5741.3	1047.1	40.0	30.4	254.9	-1000.4
8	197	9034.5	-1497.4	-62.1	-25.6	-202.7	-2322.4
	198	-9034.5	1497.4	62.1	25.6	354.8	-1346.1
9	197	5776.2	-1048.4	-39.5	-36.7	-168.0	-1560.6
	198	-5776.2	1048.4	39.5	36.7	264.8	-1008.0
10	197	820.9	-392.7	139.5	-551.4	8.7	-506.5
	198	-820.9	392.7	-139.5	551.4	-350.4	-455.5
11	197	783.7	-339.8	-6.2	-39.0	-87.8	-404.5
	198	-783.7	339.8	6.2	39.0	102.9	-428.1
12	197	2436.2	-568.7	-17.2	-37.1	-112.0	-785.5
	198	-2436.2	568.7	17.2	37.1	154.2	-607.7
13	197	659.9	-294.9	-6.7	-22.5	-55.2	-385.8
	198	-659.9	294.9	6.7	22.5	71.7	-336.8
14	197	793.5	-347.7	23.1	-142.3	-69.7	-422.3
	198	-793.5	347.7	-23.1	142.3	13.2	-429.6
15	197	8999.6	-1496.0	-62.6	-19.3	-191.5	-2326.6
	198	-8999.6	1496.0	62.6	19.3	345.0	-1338.6
16	197	877.8	-318.2	5.3	40.2	-102.1	-440.1
	198	-877.8	318.2	-5.3	-40.2	52.2	-338.8
17	197	3079.9	-641.4	-37.7	17.4	-125.8	-963.0
	198	-3079.9	641.4	37.7	-17.4	153.5	-608.8
1	198	8179.4	-809.9	-53.0	-93.0	-372.8	-78.3
	199	-8179.4	809.9	53.0	93.0	502.5	-1905.9
2	198	12901.8	-1705.6	-88.6	-75.9	-522.6	-587.3
	199	-12901.8	1705.6	88.6	75.9	739.7	-3591.4
3	198	8229.0	-809.6	-50.1	-115.5	-387.6	-77.2
	199	-8229.0	809.6	50.1	115.5	510.4	-1906.5

Comb.	Nodo	N [kg]	T1-2 [kg]	T1-3 [kg]	Mt [kgm]	M1-3 [kgm]	M1-2 [kgm]
4	198	1081.5	266.0	-1210.7	724.9	535.5	453.6
	199	-1081.5	-266.0	1210.7	-724.9	2430.7	198.1
5	198	830.0	86.6	17.9	28.7	-53.0	125.8
	199	-830.0	-86.6	-17.9	-28.7	9.2	12.0
6	198	2778.7	-244.6	-26.5	-6.8	-145.0	6.4
	199	-2778.7	244.6	26.5	6.8	201.9	-628.4
7	198	5523.7	-538.3	-36.0	-65.1	-255.0	-39.0
	199	-5523.7	538.3	36.0	65.1	343.2	-1279.7
8	198	8671.9	-1135.4	-59.8	-53.7	-354.9	-378.4
	199	-8671.9	1135.4	59.8	53.7	501.4	-2403.4
9	198	5556.7	-538.1	-34.1	-80.1	-264.9	-38.3
	199	-5556.7	538.1	34.1	80.1	348.5	-1280.1
10	198	791.7	179.0	-807.8	480.2	350.6	315.6
	199	-791.7	-179.0	807.8	-480.2	1628.6	123.0
11	198	773.2	268.9	0.7	-85.8	-103.0	375.5
	199	-773.2	-268.9	-0.7	85.8	101.2	283.4
12	198	2354.1	-19.8	-11.1	-81.4	-154.3	216.4
	199	-2354.1	19.8	11.1	81.4	181.4	-264.9
13	198	641.5	154.4	-3.3	-47.2	-71.7	251.5
	199	-641.5	-154.4	3.3	47.2	79.8	126.7
14	198	778.1	243.1	-160.7	25.4	-13.2	355.2
	199	-778.1	-243.1	160.7	-25.4	406.8	240.4
15	198	8638.9	-1135.6	-61.7	-38.7	-345.0	-379.1
	199	-8638.9	1135.6	61.7	38.7	496.1	-2403.0
16	198	847.5	82.9	19.6	34.4	-52.4	116.7
	199	-847.5	-82.9	-19.6	-34.4	4.7	5.2
17	198	2962.6	-277.3	-28.6	-4.1	-153.5	-13.5
	199	-2962.6	277.3	28.6	4.1	214.9	-690.9
1	64	-1545.8	-0.0	0.0	0.0	0.0	0.0
	69	1545.8	-0.0	0.0	0.0	0.0	0.0
2	64	-2667.7	-0.0	0.0	0.0	0.0	0.0
	69	2667.7	-0.0	0.0	0.0	0.0	0.0
3	64	-1514.6	-0.0	0.0	0.0	0.0	0.0
	69	1514.6	-0.0	0.0	0.0	0.0	0.0
4	64	843.4	0.0	-0.0	0.0	0.0	0.0
	69	-843.4	-0.0	0.0	0.0	0.0	0.0
5	64	-673.6	-0.0	0.0	0.0	0.0	0.0
	69	673.6	-0.0	0.0	0.0	0.0	0.0
6	64	-935.9	-0.0	0.0	0.0	0.0	0.0
	69	935.9	-0.0	0.0	0.0	0.0	0.0
7	64	-1024.2	-0.0	0.0	0.0	0.0	0.0
	69	1024.2	-0.0	0.0	0.0	0.0	0.0
8	64	-1772.1	-0.0	0.0	0.0	0.0	0.0
	69	1772.1	-0.0	0.0	0.0	0.0	0.0
9	64	-1003.4	-0.0	0.0	0.0	0.0	0.0
	69	1003.4	-0.0	0.0	0.0	0.0	0.0

Comb.	Nodo	N [kg]	T1-2 [kg]	T1-3 [kg]	Mt [kgm]	M1-3 [kgm]	M1-2 [kgm]
10	64	568.6	0.0	-0.0	0.0	0.0	0.0
	69	-568.6	-0.0	0.0	0.0	0.0	0.0
11	64	111.0	-0.0	0.0	0.0	0.0	0.0
	69	-111.0	-0.0	0.0	0.0	0.0	0.0
12	64	-262.1	-0.0	0.0	0.0	0.0	0.0
	69	262.1	-0.0	0.0	0.0	0.0	0.0
13	64	68.0	-0.0	0.0	0.0	0.0	0.0
	69	-68.0	-0.0	0.0	0.0	0.0	0.0
14	64	206.0	0.0	-0.0	0.0	0.0	0.0
	69	-206.0	-0.0	0.0	0.0	0.0	0.0
15	64	-1792.9	-0.0	0.0	0.0	0.0	0.0
	69	1792.9	-0.0	0.0	0.0	0.0	0.0
16	64	-731.9	-0.0	0.0	0.0	0.0	0.0
	69	731.9	-0.0	0.0	0.0	0.0	0.0
17	64	-1017.6	-0.0	0.0	0.0	0.0	0.0
	69	1017.6	-0.0	0.0	0.0	0.0	0.0
1	63	1982.0	0.0	0.0	0.0	0.0	0.0
	71	-1982.0	-0.0	-0.0	0.0	0.0	0.0
2	63	3657.0	0.0	0.0	0.0	0.0	0.0
	71	-3657.0	-0.0	-0.0	0.0	0.0	0.0
3	63	2052.4	0.0	0.0	0.0	0.0	0.0
	71	-2052.4	-0.0	-0.0	0.0	0.0	0.0
4	63	-2803.4	0.0	0.0	0.0	0.0	0.0
	71	2803.4	-0.0	-0.0	0.0	0.0	0.0
5	63	830.9	0.0	0.0	0.0	0.0	0.0
	71	-830.9	-0.0	-0.0	0.0	0.0	0.0
6	63	935.6	-0.0	-0.0	0.0	0.0	0.0
	71	-935.6	-0.0	-0.0	0.0	0.0	0.0
7	63	1280.0	0.0	0.0	0.0	0.0	0.0
	71	-1280.0	-0.0	-0.0	0.0	0.0	0.0
8	63	2396.7	0.0	0.0	0.0	0.0	0.0
	71	-2396.7	-0.0	-0.0	0.0	0.0	0.0
9	63	1327.0	0.0	0.0	0.0	0.0	0.0
	71	-1327.0	-0.0	-0.0	0.0	0.0	0.0
10	63	-1910.2	0.0	0.0	0.0	0.0	0.0
	71	1910.2	-0.0	-0.0	0.0	0.0	0.0
11	63	-314.0	0.0	0.0	0.0	0.0	0.0
	71	314.0	-0.0	-0.0	0.0	0.0	0.0
12	63	240.5	0.0	0.0	0.0	0.0	0.0
	71	-240.5	-0.0	-0.0	0.0	0.0	0.0
13	63	-345.3	0.0	0.0	0.0	0.0	0.0
	71	345.3	-0.0	-0.0	0.0	0.0	0.0
14	63	-620.9	0.0	0.0	0.0	0.0	0.0
	71	620.9	-0.0	-0.0	0.0	0.0	0.0
15	63	2349.8	0.0	0.0	0.0	0.0	0.0
	71	-2349.8	-0.0	-0.0	0.0	0.0	0.0

Comb.	Nodo	N [kg]	T1-2 [kg]	T1-3 [kg]	Mt [kgm]	M1-3 [kgm]	M1-2 [kgm]
16	63	923.2	0.0	0.0	0.0	0.0	0.0
	71	-923.2	-0.0	-0.0	0.0	0.0	0.0
17	63	1055.2	-0.0	-0.0	0.0	0.0	0.0
	71	-1055.2	0.0	0.0	0.0	0.0	0.0
1	63	-63.9	0.0	-0.0	0.0	0.0	0.0
	58	63.9	0.0	0.0	0.0	0.0	0.0
2	63	58.6	0.0	-0.0	0.0	0.0	0.0
	58	-58.6	0.0	0.0	0.0	0.0	0.0
3	63	-19.9	0.0	-0.0	0.0	0.0	0.0
	58	19.9	0.0	0.0	0.0	0.0	0.0
4	63	-2202.3	0.0	0.0	0.0	0.0	0.0
	58	2202.3	0.0	-0.0	0.0	0.0	0.0
5	63	674.5	0.0	0.0	0.0	0.0	0.0
	58	-674.5	0.0	-0.0	0.0	0.0	0.0
6	63	417.5	0.0	-0.0	0.0	0.0	0.0
	58	-417.5	0.0	0.0	0.0	0.0	0.0
7	63	-57.3	0.0	-0.0	0.0	0.0	0.0
	58	57.3	0.0	0.0	0.0	0.0	0.0
8	63	24.3	0.0	-0.0	0.0	0.0	0.0
	58	-24.3	0.0	0.0	0.0	0.0	0.0
9	63	-28.0	0.0	-0.0	0.0	0.0	0.0
	58	28.0	0.0	0.0	0.0	0.0	0.0
10	63	-1483.0	0.0	0.0	0.0	0.0	0.0
	58	1483.0	0.0	-0.0	0.0	0.0	0.0
11	63	-125.2	0.0	-0.0	0.0	0.0	0.0
	58	125.2	0.0	0.0	0.0	0.0	0.0
12	63	-87.2	0.0	-0.0	0.0	0.0	0.0
	58	87.2	0.0	0.0	0.0	0.0	0.0
13	63	-139.5	0.0	-0.0	0.0	0.0	0.0
	58	139.5	0.0	0.0	0.0	0.0	0.0
14	63	-388.7	0.0	0.0	0.0	0.0	0.0
	58	388.7	0.0	-0.0	0.0	0.0	0.0
15	63	-5.0	0.0	-0.0	0.0	0.0	0.0
	58	5.0	0.0	0.0	0.0	0.0	0.0
16	63	754.0	0.0	-0.0	0.0	0.0	0.0
	58	-754.0	0.0	0.0	0.0	0.0	0.0
17	63	468.8	0.0	0.0	0.0	0.0	0.0
	58	-468.8	0.0	-0.0	0.0	0.0	0.0
1	57	1306.8	-0.0	-0.0	0.0	0.0	0.0
	64	-1306.8	0.0	0.0	0.0	0.0	0.0
2	57	2256.5	-0.0	-0.0	0.0	0.0	0.0
	64	-2256.5	0.0	0.0	0.0	0.0	0.0
3	57	1284.5	-0.0	-0.0	0.0	0.0	0.0
	64	-1284.5	0.0	0.0	0.0	0.0	0.0
4	57	-277.6	0.0	0.0	0.0	0.0	0.0

Comb.	Nodo	N [kg]	T1-2 [kg]	T1-3 [kg]	Mt [kgm]	M1-3 [kgm]	M1-2 [kgm]
	64	277.6	-0.0	-0.0	0.0	0.0	0.0
5	57	172.3	0.0	0.0	0.0	0.0	0.0
	64	-172.3	-0.0	-0.0	0.0	0.0	0.0
6	57	300.3	0.0	0.0	0.0	0.0	0.0
	64	-300.3	-0.0	-0.0	0.0	0.0	0.0
7	57	864.5	-0.0	-0.0	0.0	0.0	0.0
	64	-864.5	0.0	0.0	0.0	0.0	0.0
8	57	1497.7	-0.0	-0.0	0.0	0.0	0.0
	64	-1497.7	0.0	0.0	0.0	0.0	0.0
9	57	849.7	-0.0	-0.0	0.0	0.0	0.0
	64	-849.7	0.0	0.0	0.0	0.0	0.0
10	57	-191.7	0.0	0.0	0.0	0.0	0.0
	64	191.7	-0.0	-0.0	0.0	0.0	0.0
11	57	-94.8	-0.0	-0.0	0.0	0.0	0.0
	64	94.8	0.0	0.0	0.0	0.0	0.0
12	57	221.2	-0.0	-0.0	0.0	0.0	0.0
	64	-221.2	0.0	0.0	0.0	0.0	0.0
13	57	-64.3	-0.0	-0.0	0.0	0.0	0.0
	64	64.3	0.0	0.0	0.0	0.0	0.0
14	57	-116.7	0.0	0.0	0.0	0.0	0.0
	64	116.7	-0.0	-0.0	0.0	0.0	0.0
15	57	1512.6	-0.0	-0.0	0.0	0.0	0.0
	64	-1512.6	0.0	0.0	0.0	0.0	0.0
16	57	190.1	0.0	0.0	0.0	0.0	0.0
	64	-190.1	-0.0	-0.0	0.0	0.0	0.0
17	57	332.4	-0.0	-0.0	0.0	0.0	0.0
	64	-332.4	0.0	0.0	0.0	0.0	0.0
1	52	5360.2	0.0	-0.0	0.0	0.0	0.0
	60	-5360.2	0.0	0.0	0.0	0.0	0.0
2	52	6725.6	0.0	-0.0	0.0	0.0	0.0
	60	-6725.6	0.0	0.0	0.0	0.0	0.0
3	52	5058.3	0.0	-0.0	0.0	0.0	0.0
	60	-5058.3	0.0	0.0	0.0	0.0	0.0
4	52	1219.2	0.0	-0.0	0.0	0.0	0.0
	60	-1219.2	0.0	0.0	0.0	0.0	0.0
5	52	2919.5	0.0	0.0	0.0	0.0	0.0
	60	-2919.5	0.0	-0.0	0.0	0.0	0.0
6	52	3023.3	0.0	0.0	0.0	0.0	0.0
	60	-3023.3	0.0	-0.0	0.0	0.0	0.0
7	52	3815.3	0.0	-0.0	0.0	0.0	0.0
	60	-3815.3	0.0	0.0	0.0	0.0	0.0
8	52	4725.6	0.0	-0.0	0.0	0.0	0.0
	60	-4725.6	0.0	0.0	0.0	0.0	0.0
9	52	3614.1	0.0	-0.0	0.0	0.0	0.0
	60	-3614.1	0.0	0.0	0.0	0.0	0.0
10	52	1054.6	0.0	-0.0	0.0	0.0	0.0

Comb.	Nodo	N [kg]	T1-2 [kg]	T1-3 [kg]	Mt [kgm]	M1-3 [kgm]	M1-2 [kgm]
	60	-1054.6	0.0	0.0	0.0	0.0	0.0
11	52	2033.4	0.0	-0.0	0.0	0.0	0.0
	60	-2033.4	0.0	0.0	0.0	0.0	0.0
12	52	2512.4	0.0	-0.0	0.0	0.0	0.0
	60	-2512.4	0.0	0.0	0.0	0.0	0.0
13	52	2077.9	0.0	-0.0	0.0	0.0	0.0
	60	-2077.9	0.0	0.0	0.0	0.0	0.0
14	52	1778.2	0.0	-0.0	0.0	0.0	0.0
	60	-1778.2	0.0	0.0	0.0	0.0	0.0
15	52	4926.8	0.0	-0.0	0.0	0.0	0.0
	60	-4926.8	0.0	0.0	0.0	0.0	0.0
16	52	2999.9	0.0	0.0	0.0	0.0	0.0
	60	-2999.9	0.0	-0.0	0.0	0.0	0.0
17	52	3105.6	0.0	0.0	0.0	0.0	0.0
	60	-3105.6	0.0	-0.0	0.0	0.0	0.0
1	60	-359.9	0.0	0.0	0.0	0.0	0.0
	54	359.9	-0.0	-0.0	0.0	0.0	0.0
2	60	-454.8	0.0	0.0	0.0	0.0	0.0
	54	454.8	-0.0	-0.0	0.0	0.0	0.0
3	60	-426.4	0.0	0.0	0.0	0.0	0.0
	54	426.4	-0.0	-0.0	0.0	0.0	0.0
4	60	1594.9	0.0	0.0	0.0	0.0	0.0
	54	-1594.9	-0.0	-0.0	0.0	0.0	0.0
5	60	-950.4	-0.0	-0.0	0.0	0.0	0.0
	54	950.4	0.0	0.0	0.0	0.0	0.0
6	60	-646.0	0.0	0.0	0.0	0.0	0.0
	54	646.0	-0.0	-0.0	0.0	0.0	0.0
7	60	-242.6	0.0	0.0	0.0	0.0	0.0
	54	242.6	-0.0	-0.0	0.0	0.0	0.0
8	60	-305.8	0.0	0.0	0.0	0.0	0.0
	54	305.8	-0.0	-0.0	0.0	0.0	0.0
9	60	-286.9	0.0	0.0	0.0	0.0	0.0
	54	286.9	-0.0	-0.0	0.0	0.0	0.0
10	60	1060.6	0.0	0.0	0.0	0.0	0.0
	54	-1060.6	-0.0	-0.0	0.0	0.0	0.0
11	60	-170.6	-0.0	-0.0	0.0	0.0	0.0
	54	170.6	0.0	0.0	0.0	0.0	0.0
12	60	-204.6	0.0	0.0	0.0	0.0	0.0
	54	204.6	-0.0	-0.0	0.0	0.0	0.0
13	60	-71.9	-0.0	-0.0	0.0	0.0	0.0
	54	71.9	0.0	0.0	0.0	0.0	0.0
14	60	68.7	-0.0	-0.0	0.0	0.0	0.0
	54	-68.7	0.0	0.0	0.0	0.0	0.0
15	60	-261.5	0.0	0.0	0.0	0.0	0.0
	54	261.5	-0.0	-0.0	0.0	0.0	0.0
16	60	-1042.3	-0.0	-0.0	0.0	0.0	0.0

Comb.	Nodo	N [kg]	T1-2 [kg]	T1-3 [kg]	Mt [kgm]	M1-3 [kgm]	M1-2 [kgm]
	54	1042.3	0.0	0.0	0.0	0.0	0.0
17	60	-712.9	0.0	0.0	0.0	0.0	0.0
	54	712.9	-0.0	-0.0	0.0	0.0	0.0
1	54	1319.0	0.0	-0.0	0.0	0.0	0.0
	62	-1319.0	0.0	0.0	0.0	0.0	0.0
2	54	2128.1	0.0	0.0	0.0	0.0	0.0
	62	-2128.1	0.0	-0.0	0.0	0.0	0.0
3	54	1399.6	0.0	0.0	0.0	0.0	0.0
	62	-1399.6	0.0	-0.0	0.0	0.0	0.0
4	54	-1745.4	0.0	0.0	0.0	0.0	0.0
	62	1745.4	0.0	-0.0	0.0	0.0	0.0
5	54	882.7	0.0	0.0	0.0	0.0	0.0
	62	-882.7	0.0	-0.0	0.0	0.0	0.0
6	54	581.2	0.0	-0.0	0.0	0.0	0.0
	62	-581.2	0.0	0.0	0.0	0.0	0.0
7	54	874.0	0.0	-0.0	0.0	0.0	0.0
	62	-874.0	0.0	0.0	0.0	0.0	0.0
8	54	1413.4	0.0	0.0	0.0	0.0	0.0
	62	-1413.4	0.0	-0.0	0.0	0.0	0.0
9	54	927.7	0.0	-0.0	0.0	0.0	0.0
	62	-927.7	0.0	0.0	0.0	0.0	0.0
10	54	-1168.9	0.0	0.0	0.0	0.0	0.0
	62	1168.9	0.0	-0.0	0.0	0.0	0.0
11	54	105.4	0.0	-0.0	0.0	0.0	0.0
	62	-105.4	0.0	0.0	0.0	0.0	0.0
12	54	376.6	0.0	-0.0	0.0	0.0	0.0
	62	-376.6	0.0	0.0	0.0	0.0	0.0
13	54	2.5	0.0	-0.0	0.0	0.0	0.0
	62	-2.5	0.0	0.0	0.0	0.0	0.0
14	54	-139.9	0.0	-0.0	0.0	0.0	0.0
	62	139.9	0.0	0.0	0.0	0.0	0.0
15	54	1359.7	0.0	0.0	0.0	0.0	0.0
	62	-1359.7	0.0	-0.0	0.0	0.0	0.0
16	54	976.1	0.0	0.0	0.0	0.0	0.0
	62	-976.1	0.0	-0.0	0.0	0.0	0.0
17	54	651.6	0.0	0.0	0.0	0.0	0.0
	62	-651.6	0.0	-0.0	0.0	0.0	0.0
1	62	-1175.9	0.0	0.0	0.0	0.0	0.0
	56	1175.9	-0.0	-0.0	0.0	0.0	0.0
2	62	-1839.6	0.0	0.0	0.0	0.0	0.0
	56	1839.6	-0.0	-0.0	0.0	0.0	0.0
3	62	-1274.3	0.0	0.0	0.0	0.0	0.0
	56	1274.3	-0.0	-0.0	0.0	0.0	0.0
4	62	1127.8	0.0	0.0	0.0	0.0	0.0
	56	-1127.8	-0.0	-0.0	0.0	0.0	0.0

Comb.	Nodo	N [kg]	T1-2 [kg]	T1-3 [kg]	Mt [kgm]	M1-3 [kgm]	M1-2 [kgm]
5	62	-759.8	-0.0	-0.0	0.0	0.0	0.0
	56	759.8	0.0	0.0	0.0	0.0	0.0
6	62	-590.1	-0.0	-0.0	0.0	0.0	0.0
	56	590.1	0.0	0.0	0.0	0.0	0.0
7	62	-784.4	0.0	0.0	0.0	0.0	0.0
	56	784.4	-0.0	-0.0	0.0	0.0	0.0
8	62	-1226.8	0.0	0.0	0.0	0.0	0.0
	56	1226.8	-0.0	-0.0	0.0	0.0	0.0
9	62	-850.0	0.0	0.0	0.0	0.0	0.0
	56	850.0	-0.0	-0.0	0.0	0.0	0.0
10	62	751.4	0.0	0.0	0.0	0.0	0.0
	56	-751.4	-0.0	-0.0	0.0	0.0	0.0
11	62	-172.9	0.0	0.0	0.0	0.0	0.0
	56	172.9	-0.0	-0.0	0.0	0.0	0.0
12	62	-395.7	0.0	0.0	0.0	0.0	0.0
	56	395.7	-0.0	-0.0	0.0	0.0	0.0
13	62	-50.7	0.0	0.0	0.0	0.0	0.0
	56	50.7	-0.0	-0.0	0.0	0.0	0.0
14	62	-0.0	0.0	0.0	0.0	0.0	0.0
	56	0.0	-0.0	-0.0	0.0	0.0	0.0
15	62	-1161.2	0.0	0.0	0.0	0.0	0.0
	56	1161.2	-0.0	-0.0	0.0	0.0	0.0
16	62	-840.4	-0.0	-0.0	0.0	0.0	0.0
	56	840.4	0.0	0.0	0.0	0.0	0.0
17	62	-662.0	-0.0	-0.0	0.0	0.0	0.0
	56	662.0	0.0	0.0	0.0	0.0	0.0
1	59	-2853.2	-0.0	-0.0	0.0	0.0	0.0
	66	2853.2	0.0	0.0	0.0	0.0	0.0
2	59	-3984.8	-0.0	-0.0	0.0	0.0	0.0
	66	3984.8	0.0	0.0	0.0	0.0	0.0
3	59	-2789.3	-0.0	-0.0	0.0	0.0	0.0
	66	2789.3	0.0	0.0	0.0	0.0	0.0
4	59	66.7	-0.0	-0.0	0.0	0.0	0.0
	66	-66.7	0.0	0.0	0.0	0.0	0.0
5	59	-1411.2	-0.0	-0.0	0.0	0.0	0.0
	66	1411.2	0.0	0.0	0.0	0.0	0.0
6	59	-1288.9	-0.0	-0.0	0.0	0.0	0.0
	66	1288.9	0.0	0.0	0.0	0.0	0.0
7	59	-1981.2	-0.0	-0.0	0.0	0.0	0.0
	66	1981.2	0.0	0.0	0.0	0.0	0.0
8	59	-2735.6	-0.0	-0.0	0.0	0.0	0.0
	66	2735.6	0.0	0.0	0.0	0.0	0.0
9	59	-1938.6	-0.0	-0.0	0.0	0.0	0.0
	66	1938.6	0.0	0.0	0.0	0.0	0.0
10	59	-34.6	-0.0	-0.0	0.0	0.0	0.0
	66	34.6	0.0	0.0	0.0	0.0	0.0

Comb.	Nodo	N [kg]	T1-2 [kg]	T1-3 [kg]	Mt [kgm]	M1-3 [kgm]	M1-2 [kgm]
11	59	-730.1	-0.0	-0.0	0.0	0.0	0.0
	66	730.1	0.0	0.0	0.0	0.0	0.0
12	59	-1115.8	-0.0	-0.0	0.0	0.0	0.0
	66	1115.8	0.0	0.0	0.0	0.0	0.0
13	59	-699.1	-0.0	-0.0	0.0	0.0	0.0
	66	699.1	0.0	0.0	0.0	0.0	0.0
14	59	-575.6	-0.0	-0.0	0.0	0.0	0.0
	66	575.6	0.0	0.0	0.0	0.0	0.0
15	59	-2778.3	-0.0	-0.0	0.0	0.0	0.0
	66	2778.3	0.0	0.0	0.0	0.0	0.0
16	59	-1501.2	0.0	0.0	0.0	0.0	0.0
	66	1501.2	-0.0	-0.0	0.0	0.0	0.0
17	59	-1349.0	-0.0	-0.0	0.0	0.0	0.0
	66	1349.0	0.0	0.0	0.0	0.0	0.0
1	66	390.1	0.0	0.0	0.0	0.0	0.0
	61	-390.1	-0.0	-0.0	0.0	0.0	0.0
2	66	715.2	0.0	0.0	0.0	0.0	0.0
	61	-715.2	-0.0	-0.0	0.0	0.0	0.0
3	66	432.1	0.0	0.0	0.0	0.0	0.0
	61	-432.1	-0.0	-0.0	0.0	0.0	0.0
4	66	-1215.5	0.0	0.0	0.0	0.0	0.0
	61	1215.5	0.0	0.0	0.0	0.0	0.0
5	66	565.0	-0.0	-0.0	0.0	0.0	0.0
	61	-565.0	-0.0	-0.0	0.0	0.0	0.0
6	66	337.8	0.0	0.0	0.0	0.0	0.0
	61	-337.8	-0.0	-0.0	0.0	0.0	0.0
7	66	248.2	0.0	0.0	0.0	0.0	0.0
	61	-248.2	-0.0	-0.0	0.0	0.0	0.0
8	66	465.0	0.0	0.0	0.0	0.0	0.0
	61	-465.0	-0.0	-0.0	0.0	0.0	0.0
9	66	276.2	0.0	0.0	0.0	0.0	0.0
	61	-276.2	-0.0	-0.0	0.0	0.0	0.0
10	66	-822.2	0.0	0.0	0.0	0.0	0.0
	61	822.2	0.0	0.0	0.0	0.0	0.0
11	66	-44.8	-0.0	-0.0	0.0	0.0	0.0
	61	44.8	0.0	0.0	0.0	0.0	0.0
12	66	63.1	0.0	0.0	0.0	0.0	0.0
	61	-63.1	-0.0	-0.0	0.0	0.0	0.0
13	66	-84.3	-0.0	-0.0	0.0	0.0	0.0
	61	84.3	0.0	0.0	0.0	0.0	0.0
14	66	-194.3	-0.0	-0.0	0.0	0.0	0.0
	61	194.3	0.0	0.0	0.0	0.0	0.0
15	66	437.0	0.0	0.0	0.0	0.0	0.0
	61	-437.0	-0.0	-0.0	0.0	0.0	0.0
16	66	644.9	-0.0	-0.0	0.0	0.0	0.0
	61	-644.9	-0.0	-0.0	0.0	0.0	0.0

Comb.	Nodo	N [kg]	T1-2 [kg]	T1-3 [kg]	Mt [kgm]	M1-3 [kgm]	M1-2 [kgm]
17	66	380.1	-0.0	-0.0	0.0	0.0	0.0
	61	-380.1	-0.0	-0.0	0.0	0.0	0.0
1	61	94.8	-0.0	-0.0	0.0	0.0	0.0
	68	-94.8	0.0	0.0	0.0	0.0	0.0
2	61	132.0	-0.0	-0.0	0.0	0.0	0.0
	68	-132.0	0.0	0.0	0.0	0.0	0.0
3	61	-2.6	-0.0	-0.0	0.0	0.0	0.0
	68	2.6	0.0	0.0	0.0	0.0	0.0
4	61	896.5	-0.0	-0.0	0.0	0.0	0.0
	68	-896.5	0.0	0.0	0.0	0.0	0.0
5	61	-609.3	-0.0	-0.0	0.0	0.0	0.0
	68	609.3	0.0	0.0	0.0	0.0	0.0
6	61	-302.1	0.0	0.0	0.0	0.0	0.0
	68	302.1	-0.0	-0.0	0.0	0.0	0.0
7	61	75.9	-0.0	-0.0	0.0	0.0	0.0
	68	-75.9	0.0	0.0	0.0	0.0	0.0
8	61	100.7	-0.0	-0.0	0.0	0.0	0.0
	68	-100.7	0.0	0.0	0.0	0.0	0.0
9	61	11.0	-0.0	-0.0	0.0	0.0	0.0
	68	-11.0	0.0	0.0	0.0	0.0	0.0
10	61	610.4	-0.0	-0.0	0.0	0.0	0.0
	68	-610.4	0.0	0.0	0.0	0.0	0.0
11	61	-28.3	0.0	0.0	0.0	0.0	0.0
	68	28.3	-0.0	-0.0	0.0	0.0	0.0
12	61	-15.7	-0.0	-0.0	0.0	0.0	0.0
	68	15.7	0.0	0.0	0.0	0.0	0.0
13	61	72.9	0.0	0.0	0.0	0.0	0.0
	68	-72.9	-0.0	-0.0	0.0	0.0	0.0
14	61	86.3	0.0	0.0	0.0	0.0	0.0
	68	-86.3	-0.0	-0.0	0.0	0.0	0.0
15	61	165.7	-0.0	-0.0	0.0	0.0	0.0
	68	-165.7	0.0	0.0	0.0	0.0	0.0
16	61	-693.9	-0.0	-0.0	0.0	0.0	0.0
	68	693.9	0.0	0.0	0.0	0.0	0.0
17	61	-342.3	-0.0	-0.0	0.0	0.0	0.0
	68	342.3	0.0	0.0	0.0	0.0	0.0
1	68	-1396.0	0.0	0.0	0.0	0.0	0.0
	63	1396.0	-0.0	-0.0	0.0	0.0	0.0
2	68	-2140.4	0.0	0.0	0.0	0.0	0.0
	63	2140.4	-0.0	-0.0	0.0	0.0	0.0
3	68	-1314.1	0.0	0.0	0.0	0.0	0.0
	63	1314.1	-0.0	-0.0	0.0	0.0	0.0
4	68	-1449.0	0.0	0.0	0.0	0.0	0.0
	63	1449.0	-0.0	-0.0	0.0	0.0	0.0
5	68	530.8	-0.0	-0.0	0.0	0.0	0.0

Comb.	Nodo	N [kg]	T1-2 [kg]	T1-3 [kg]	Mt [kgm]	M1-3 [kgm]	M1-2 [kgm]
	63	-530.8	-0.0	-0.0	0.0	0.0	0.0
6	68	126.0	-0.0	-0.0	0.0	0.0	0.0
	63	-126.0	-0.0	-0.0	0.0	0.0	0.0
7	68	-956.6	0.0	0.0	0.0	0.0	0.0
	63	956.6	-0.0	-0.0	0.0	0.0	0.0
8	68	-1452.8	0.0	0.0	0.0	0.0	0.0
	63	1452.8	-0.0	-0.0	0.0	0.0	0.0
9	68	-901.9	0.0	0.0	0.0	0.0	0.0
	63	901.9	-0.0	-0.0	0.0	0.0	0.0
10	68	-991.8	0.0	0.0	0.0	0.0	0.0
	63	991.8	-0.0	-0.0	0.0	0.0	0.0
11	68	-138.9	0.0	0.0	0.0	0.0	0.0
	63	138.9	-0.0	-0.0	0.0	0.0	0.0
12	68	-389.1	0.0	0.0	0.0	0.0	0.0
	63	389.1	-0.0	-0.0	0.0	0.0	0.0
13	68	-202.2	0.0	0.0	0.0	0.0	0.0
	63	202.2	-0.0	-0.0	0.0	0.0	0.0
14	68	-296.9	0.0	0.0	0.0	0.0	0.0
	63	296.9	-0.0	-0.0	0.0	0.0	0.0
15	68	-1507.5	0.0	0.0	0.0	0.0	0.0
	63	1507.5	-0.0	-0.0	0.0	0.0	0.0
16	68	624.2	-0.0	-0.0	0.0	0.0	0.0
	63	-624.2	-0.0	-0.0	0.0	0.0	0.0
17	68	172.7	-0.0	-0.0	0.0	0.0	0.0
	63	-172.7	-0.0	-0.0	0.0	0.0	0.0
1	69	1041.3	-0.0	0.0	0.0	0.0	0.0
	62	-1041.3	-0.0	0.0	0.0	0.0	0.0
2	69	1482.5	-0.0	0.0	0.0	0.0	0.0
	62	-1482.5	-0.0	0.0	0.0	0.0	0.0
3	69	1011.9	-0.0	0.0	0.0	0.0	0.0
	62	-1011.9	-0.0	0.0	0.0	0.0	0.0
4	69	469.5	-0.0	0.0	0.0	0.0	0.0
	62	-469.5	0.0	-0.0	0.0	0.0	0.0
5	69	540.4	0.0	-0.0	0.0	0.0	0.0
	62	-540.4	-0.0	0.0	0.0	0.0	0.0
6	69	174.0	0.0	-0.0	0.0	0.0	0.0
	62	-174.0	-0.0	0.0	0.0	0.0	0.0
7	69	718.1	-0.0	0.0	0.0	0.0	0.0
	62	-718.1	-0.0	0.0	0.0	0.0	0.0
8	69	1012.2	-0.0	0.0	0.0	0.0	0.0
	62	-1012.2	-0.0	0.0	0.0	0.0	0.0
9	69	698.4	-0.0	0.0	0.0	0.0	0.0
	62	-698.4	-0.0	0.0	0.0	0.0	0.0
10	69	336.8	-0.0	0.0	0.0	0.0	0.0
	62	-336.8	0.0	-0.0	0.0	0.0	0.0
11	69	227.0	0.0	-0.0	0.0	0.0	0.0

Comb.	Nodo	N [kg]	T1-2 [kg]	T1-3 [kg]	Mt [kgm]	M1-3 [kgm]	M1-2 [kgm]
	62	-227.0	-0.0	0.0	0.0	0.0	0.0
12	69	377.4	-0.0	0.0	0.0	0.0	0.0
	62	-377.4	-0.0	0.0	0.0	0.0	0.0
13	69	219.5	0.0	-0.0	0.0	0.0	0.0
	62	-219.5	-0.0	0.0	0.0	0.0	0.0
14	69	242.4	-0.0	0.0	0.0	0.0	0.0
	62	-242.4	0.0	-0.0	0.0	0.0	0.0
15	69	1031.9	-0.0	0.0	0.0	0.0	0.0
	62	-1031.9	-0.0	0.0	0.0	0.0	0.0
16	69	597.2	0.0	-0.0	0.0	0.0	0.0
	62	-597.2	-0.0	0.0	0.0	0.0	0.0
17	69	182.6	0.0	-0.0	0.0	0.0	0.0
	62	-182.6	-0.0	0.0	0.0	0.0	0.0
1	62	-881.5	-0.0	0.0	0.0	0.0	0.0
	67	881.5	0.0	-0.0	0.0	0.0	0.0
2	62	-1077.6	-0.0	0.0	0.0	0.0	0.0
	67	1077.6	0.0	-0.0	0.0	0.0	0.0
3	62	-863.1	-0.0	0.0	0.0	0.0	0.0
	67	863.1	0.0	-0.0	0.0	0.0	0.0
4	62	-1753.6	0.0	-0.0	0.0	0.0	0.0
	67	1753.6	-0.0	0.0	0.0	0.0	0.0
5	62	485.8	0.0	-0.0	0.0	0.0	0.0
	67	-485.8	-0.0	0.0	0.0	0.0	0.0
6	62	135.7	0.0	-0.0	0.0	0.0	0.0
	67	-135.7	-0.0	0.0	0.0	0.0	0.0
7	62	-620.9	-0.0	0.0	0.0	0.0	0.0
	67	620.9	0.0	-0.0	0.0	0.0	0.0
8	62	-751.6	-0.0	0.0	0.0	0.0	0.0
	67	751.6	0.0	-0.0	0.0	0.0	0.0
9	62	-608.6	-0.0	0.0	0.0	0.0	0.0
	67	608.6	0.0	-0.0	0.0	0.0	0.0
10	62	-1202.3	0.0	-0.0	0.0	0.0	0.0
	67	1202.3	-0.0	0.0	0.0	0.0	0.0
11	62	-364.2	-0.0	0.0	0.0	0.0	0.0
	67	364.2	0.0	-0.0	0.0	0.0	0.0
12	62	-435.0	-0.0	0.0	0.0	0.0	0.0
	67	435.0	0.0	-0.0	0.0	0.0	0.0
13	62	-321.5	-0.0	0.0	0.0	0.0	0.0
	67	321.5	0.0	-0.0	0.0	0.0	0.0
14	62	-525.1	0.0	-0.0	0.0	0.0	0.0
	67	525.1	-0.0	0.0	0.0	0.0	0.0
15	62	-763.9	-0.0	0.0	0.0	0.0	0.0
	67	763.9	0.0	-0.0	0.0	0.0	0.0
16	62	574.6	0.0	-0.0	0.0	0.0	0.0
	67	-574.6	-0.0	0.0	0.0	0.0	0.0
17	62	178.4	-0.0	0.0	0.0	0.0	0.0

Comb.	Nodo	N [kg]	T1-2 [kg]	T1-3 [kg]	Mt [kgm]	M1-3 [kgm]	M1-2 [kgm]
	67	-178.4	0.0	-0.0	0.0	0.0	0.0
1	67	-93.4	0.0	-0.0	0.0	0.0	0.0
	60	93.4	-0.0	0.0	0.0	0.0	0.0
2	67	-400.5	0.0	-0.0	0.0	0.0	0.0
	60	400.5	-0.0	0.0	0.0	0.0	0.0
3	67	-245.1	0.0	-0.0	0.0	0.0	0.0
	60	245.1	-0.0	0.0	0.0	0.0	0.0
4	67	1463.3	-0.0	0.0	0.0	0.0	0.0
	60	-1463.3	0.0	-0.0	0.0	0.0	0.0
5	67	-458.1	0.0	-0.0	0.0	0.0	0.0
	60	458.1	0.0	-0.0	0.0	0.0	0.0
6	67	-81.1	0.0	-0.0	0.0	0.0	0.0
	60	81.1	-0.0	0.0	0.0	0.0	0.0
7	67	-22.1	0.0	-0.0	0.0	0.0	0.0
	60	22.1	-0.0	0.0	0.0	0.0	0.0
8	67	-226.8	0.0	-0.0	0.0	0.0	0.0
	60	226.8	-0.0	0.0	0.0	0.0	0.0
9	67	-123.3	0.0	-0.0	0.0	0.0	0.0
	60	123.3	-0.0	0.0	0.0	0.0	0.0
10	67	1015.7	-0.0	0.0	0.0	0.0	0.0
	60	-1015.7	0.0	-0.0	0.0	0.0	0.0
11	67	161.9	-0.0	0.0	0.0	0.0	0.0
	60	-161.9	-0.0	0.0	0.0	0.0	0.0
12	67	62.0	0.0	-0.0	0.0	0.0	0.0
	60	-62.0	-0.0	0.0	0.0	0.0	0.0
13	67	295.6	-0.0	0.0	0.0	0.0	0.0
	60	-295.6	-0.0	0.0	0.0	0.0	0.0
14	67	310.5	-0.0	0.0	0.0	0.0	0.0
	60	-310.5	-0.0	0.0	0.0	0.0	0.0
15	67	-125.7	0.0	-0.0	0.0	0.0	0.0
	60	125.7	-0.0	0.0	0.0	0.0	0.0
16	67	-545.7	0.0	-0.0	0.0	0.0	0.0
	60	545.7	-0.0	0.0	0.0	0.0	0.0
17	67	-120.9	-0.0	0.0	0.0	0.0	0.0
	60	120.9	-0.0	0.0	0.0	0.0	0.0
1	60	1367.1	-0.0	0.0	0.0	0.0	0.0
	65	-1367.1	0.0	-0.0	0.0	0.0	0.0
2	60	1597.9	-0.0	0.0	0.0	0.0	0.0
	65	-1597.9	0.0	-0.0	0.0	0.0	0.0
3	60	1269.7	-0.0	0.0	0.0	0.0	0.0
	65	-1269.7	0.0	-0.0	0.0	0.0	0.0
4	60	514.7	0.0	-0.0	0.0	0.0	0.0
	65	-514.7	-0.0	0.0	0.0	0.0	0.0
5	60	371.0	-0.0	0.0	0.0	0.0	0.0
	65	-371.0	0.0	-0.0	0.0	0.0	0.0

Comb.	Nodo	N [kg]	T1-2 [kg]	T1-3 [kg]	Mt [kgm]	M1-3 [kgm]	M1-2 [kgm]
6	60	520.0	-0.0	0.0	0.0	0.0	0.0
	65	-520.0	0.0	-0.0	0.0	0.0	0.0
7	60	1003.3	-0.0	0.0	0.0	0.0	0.0
	65	-1003.3	0.0	-0.0	0.0	0.0	0.0
8	60	1157.2	-0.0	0.0	0.0	0.0	0.0
	65	-1157.2	0.0	-0.0	0.0	0.0	0.0
9	60	938.4	-0.0	0.0	0.0	0.0	0.0
	65	-938.4	0.0	-0.0	0.0	0.0	0.0
10	60	435.0	0.0	-0.0	0.0	0.0	0.0
	65	-435.0	-0.0	0.0	0.0	0.0	0.0
11	60	669.4	-0.0	0.0	0.0	0.0	0.0
	65	-669.4	0.0	-0.0	0.0	0.0	0.0
12	60	750.6	-0.0	0.0	0.0	0.0	0.0
	65	-750.6	0.0	-0.0	0.0	0.0	0.0
13	60	724.2	0.0	-0.0	0.0	0.0	0.0
	65	-724.2	-0.0	0.0	0.0	0.0	0.0
14	60	606.2	0.0	-0.0	0.0	0.0	0.0
	65	-606.2	-0.0	0.0	0.0	0.0	0.0
15	60	1222.1	-0.0	0.0	0.0	0.0	0.0
	65	-1222.1	0.0	-0.0	0.0	0.0	0.0
16	60	308.2	0.0	-0.0	0.0	0.0	0.0
	65	-308.2	-0.0	0.0	0.0	0.0	0.0
17	60	493.0	-0.0	0.0	0.0	0.0	0.0
	65	-493.0	0.0	-0.0	0.0	0.0	0.0
1	59	1909.3	-0.0	-0.0	0.0	0.0	0.0
	53	-1909.3	0.0	0.0	0.0	0.0	0.0
2	59	2392.4	-0.0	-0.0	0.0	0.0	0.0
	53	-2392.4	0.0	0.0	0.0	0.0	0.0
3	59	1778.2	-0.0	-0.0	0.0	0.0	0.0
	53	-1778.2	0.0	0.0	0.0	0.0	0.0
4	59	2899.8	0.0	0.0	0.0	0.0	0.0
	53	-2899.8	-0.0	-0.0	0.0	0.0	0.0
5	59	84.3	-0.0	-0.0	0.0	0.0	0.0
	53	-84.3	0.0	0.0	0.0	0.0	0.0
6	59	972.7	-0.0	-0.0	0.0	0.0	0.0
	53	-972.7	0.0	0.0	0.0	0.0	0.0
7	59	1357.3	-0.0	-0.0	0.0	0.0	0.0
	53	-1357.3	0.0	0.0	0.0	0.0	0.0
8	59	1679.4	-0.0	-0.0	0.0	0.0	0.0
	53	-1679.4	0.0	0.0	0.0	0.0	0.0
9	59	1269.9	-0.0	-0.0	0.0	0.0	0.0
	53	-1269.9	0.0	0.0	0.0	0.0	0.0
10	59	2017.7	0.0	0.0	0.0	0.0	0.0
	53	-2017.7	-0.0	-0.0	0.0	0.0	0.0
11	59	702.3	0.0	0.0	0.0	0.0	0.0
	53	-702.3	-0.0	-0.0	0.0	0.0	0.0

Comb.	Nodo	N [kg]	T1-2 [kg]	T1-3 [kg]	Mt [kgm]	M1-3 [kgm]	M1-2 [kgm]
12	59	872.7	-0.0	-0.0	0.0	0.0	0.0
	53	-872.7	0.0	0.0	0.0	0.0	0.0
13	59	733.4	0.0	0.0	0.0	0.0	0.0
	53	-733.4	-0.0	-0.0	0.0	0.0	0.0
14	59	940.4	0.0	0.0	0.0	0.0	0.0
	53	-940.4	-0.0	-0.0	0.0	0.0	0.0
15	59	1766.8	-0.0	-0.0	0.0	0.0	0.0
	53	-1766.8	0.0	0.0	0.0	0.0	0.0
16	59	19.2	-0.0	-0.0	0.0	0.0	0.0
	53	-19.2	0.0	0.0	0.0	0.0	0.0
17	59	1001.8	-0.0	-0.0	0.0	0.0	0.0
	53	-1001.8	0.0	0.0	0.0	0.0	0.0
1	53	24.4	0.0	-0.0	0.0	0.0	0.0
	61	-24.4	0.0	0.0	0.0	0.0	0.0
2	53	354.2	0.0	-0.0	0.0	0.0	0.0
	61	-354.2	0.0	0.0	0.0	0.0	0.0
3	53	94.9	0.0	-0.0	0.0	0.0	0.0
	61	-94.9	0.0	0.0	0.0	0.0	0.0
4	53	-2258.2	0.0	-0.0	0.0	0.0	0.0
	61	2258.2	0.0	0.0	0.0	0.0	0.0
5	53	554.9	0.0	-0.0	0.0	0.0	0.0
	61	-554.9	0.0	0.0	0.0	0.0	0.0
6	53	289.6	0.0	-0.0	0.0	0.0	0.0
	61	-289.6	0.0	0.0	0.0	0.0	0.0
7	53	-20.4	0.0	-0.0	0.0	0.0	0.0
	61	20.4	0.0	0.0	0.0	0.0	0.0
8	53	199.5	0.0	-0.0	0.0	0.0	0.0
	61	-199.5	0.0	0.0	0.0	0.0	0.0
9	53	26.6	0.0	-0.0	0.0	0.0	0.0
	61	-26.6	0.0	0.0	0.0	0.0	0.0
10	53	-1542.2	0.0	-0.0	0.0	0.0	0.0
	61	1542.2	0.0	0.0	0.0	0.0	0.0
11	53	-271.8	0.0	0.0	0.0	0.0	0.0
	61	271.8	0.0	-0.0	0.0	0.0	0.0
12	53	-165.4	0.0	-0.0	0.0	0.0	0.0
	61	165.4	0.0	0.0	0.0	0.0	0.0
13	53	-306.5	0.0	0.0	0.0	0.0	0.0
	61	306.5	0.0	-0.0	0.0	0.0	0.0
14	53	-513.7	0.0	-0.0	0.0	0.0	0.0
	61	513.7	0.0	0.0	0.0	0.0	0.0
15	53	152.5	0.0	-0.0	0.0	0.0	0.0
	61	-152.5	0.0	0.0	0.0	0.0	0.0
16	53	646.6	0.0	0.0	0.0	0.0	0.0
	61	-646.6	0.0	-0.0	0.0	0.0	0.0
17	53	360.4	0.0	0.0	0.0	0.0	0.0
	61	-360.4	0.0	-0.0	0.0	0.0	0.0

Comb.	Nodo	N [kg]	T1-2 [kg]	T1-3 [kg]	Mt [kgm]	M1-3 [kgm]	M1-2 [kgm]
1	44	-1272.7	-0.0	0.0	0.0	0.0	0.0
	49	1272.7	0.0	-0.0	0.0	0.0	0.0
2	44	-1546.2	-0.0	0.0	0.0	0.0	0.0
	49	1546.2	0.0	-0.0	0.0	0.0	0.0
3	44	-1211.6	-0.0	0.0	0.0	0.0	0.0
	49	1211.6	0.0	-0.0	0.0	0.0	0.0
4	44	-197.5	0.0	-0.0	0.0	0.0	0.0
	49	197.5	-0.0	0.0	0.0	0.0	0.0
5	44	-932.2	-0.0	0.0	0.0	0.0	0.0
	49	932.2	-0.0	0.0	0.0	0.0	0.0
6	44	-399.2	-0.0	0.0	0.0	0.0	0.0
	49	399.2	-0.0	0.0	0.0	0.0	0.0
7	44	-907.5	-0.0	0.0	0.0	0.0	0.0
	49	907.5	0.0	-0.0	0.0	0.0	0.0
8	44	-1089.9	-0.0	0.0	0.0	0.0	0.0
	49	1089.9	0.0	-0.0	0.0	0.0	0.0
9	44	-866.8	-0.0	0.0	0.0	0.0	0.0
	49	866.8	0.0	-0.0	0.0	0.0	0.0
10	44	-190.8	0.0	-0.0	0.0	0.0	0.0
	49	190.8	-0.0	0.0	0.0	0.0	0.0
11	44	-533.8	0.0	-0.0	0.0	0.0	0.0
	49	533.8	-0.0	0.0	0.0	0.0	0.0
12	44	-631.6	-0.0	0.0	0.0	0.0	0.0
	49	631.6	0.0	-0.0	0.0	0.0	0.0
13	44	-522.2	0.0	-0.0	0.0	0.0	0.0
	49	522.2	-0.0	0.0	0.0	0.0	0.0
14	44	-451.7	0.0	-0.0	0.0	0.0	0.0
	49	451.7	-0.0	0.0	0.0	0.0	0.0
15	44	-1130.6	-0.0	0.0	0.0	0.0	0.0
	49	1130.6	0.0	-0.0	0.0	0.0	0.0
16	44	-962.8	-0.0	0.0	0.0	0.0	0.0
	49	962.8	0.0	-0.0	0.0	0.0	0.0
17	44	-380.7	-0.0	0.0	0.0	0.0	0.0
	49	380.7	-0.0	0.0	0.0	0.0	0.0
1	51	530.9	0.0	-0.0	0.0	0.0	0.0
	44	-530.9	-0.0	0.0	0.0	0.0	0.0
2	51	1175.4	0.0	-0.0	0.0	0.0	0.0
	44	-1175.4	-0.0	0.0	0.0	0.0	0.0
3	51	652.8	0.0	-0.0	0.0	0.0	0.0
	44	-652.8	-0.0	0.0	0.0	0.0	0.0
4	51	-2392.7	0.0	-0.0	0.0	0.0	0.0
	44	2392.7	0.0	-0.0	0.0	0.0	0.0
5	51	-276.1	0.0	-0.0	0.0	0.0	0.0
	44	276.1	-0.0	0.0	0.0	0.0	0.0
6	51	-918.5	0.0	-0.0	0.0	0.0	0.0

Comb.	Nodo	N [kg]	T1-2 [kg]	T1-3 [kg]	Mt [kgm]	M1-3 [kgm]	M1-2 [kgm]
	44	918.5	0.0	-0.0	0.0	0.0	0.0
7	51	317.1	0.0	-0.0	0.0	0.0	0.0
	44	-317.1	-0.0	0.0	0.0	0.0	0.0
8	51	746.7	0.0	-0.0	0.0	0.0	0.0
	44	-746.7	-0.0	0.0	0.0	0.0	0.0
9	51	398.3	0.0	-0.0	0.0	0.0	0.0
	44	-398.3	-0.0	0.0	0.0	0.0	0.0
10	51	-1632.0	0.0	-0.0	0.0	0.0	0.0
	44	1632.0	0.0	-0.0	0.0	0.0	0.0
11	51	-212.1	0.0	-0.0	0.0	0.0	0.0
	44	212.1	0.0	-0.0	0.0	0.0	0.0
12	51	-1.1	0.0	-0.0	0.0	0.0	0.0
	44	1.1	-0.0	0.0	0.0	0.0	0.0
13	51	-298.3	0.0	-0.0	0.0	0.0	0.0
	44	298.3	0.0	-0.0	0.0	0.0	0.0
14	51	-476.8	0.0	-0.0	0.0	0.0	0.0
	44	476.8	0.0	-0.0	0.0	0.0	0.0
15	51	665.5	0.0	-0.0	0.0	0.0	0.0
	44	-665.5	-0.0	0.0	0.0	0.0	0.0
16	51	-276.9	-0.0	0.0	0.0	0.0	0.0
	44	276.9	0.0	-0.0	0.0	0.0	0.0
17	51	-976.0	-0.0	0.0	0.0	0.0	0.0
	44	976.0	0.0	-0.0	0.0	0.0	0.0
1	50	389.2	0.0	0.0	0.0	0.0	0.0
	45	-389.2	0.0	0.0	0.0	0.0	0.0
2	50	282.5	0.0	0.0	0.0	0.0	0.0
	45	-282.5	0.0	0.0	0.0	0.0	0.0
3	50	299.6	0.0	0.0	0.0	0.0	0.0
	45	-299.6	0.0	0.0	0.0	0.0	0.0
4	50	442.5	-0.0	-0.0	0.0	0.0	0.0
	45	-442.5	0.0	0.0	0.0	0.0	0.0
5	50	-193.8	0.0	0.0	0.0	0.0	0.0
	45	193.8	-0.0	-0.0	0.0	0.0	0.0
6	50	604.6	0.0	0.0	0.0	0.0	0.0
	45	-604.6	0.0	0.0	0.0	0.0	0.0
7	50	295.9	0.0	0.0	0.0	0.0	0.0
	45	-295.9	0.0	0.0	0.0	0.0	0.0
8	50	224.8	0.0	0.0	0.0	0.0	0.0
	45	-224.8	0.0	0.0	0.0	0.0	0.0
9	50	236.1	0.0	0.0	0.0	0.0	0.0
	45	-236.1	0.0	0.0	0.0	0.0	0.0
10	50	331.4	-0.0	-0.0	0.0	0.0	0.0
	45	-331.4	0.0	0.0	0.0	0.0	0.0
11	50	294.2	0.0	0.0	0.0	0.0	0.0
	45	-294.2	0.0	0.0	0.0	0.0	0.0
12	50	264.0	0.0	0.0	0.0	0.0	0.0

Comb.	Nodo	N [kg]	T1-2 [kg]	T1-3 [kg]	Mt [kgm]	M1-3 [kgm]	M1-2 [kgm]
	45	-264.0	0.0	0.0	0.0	0.0	0.0
13	50	327.2	0.0	0.0	0.0	0.0	0.0
	45	-327.2	0.0	0.0	0.0	0.0	0.0
14	50	285.4	-0.0	-0.0	0.0	0.0	0.0
	45	-285.4	0.0	0.0	0.0	0.0	0.0
15	50	284.6	0.0	0.0	0.0	0.0	0.0
	45	-284.6	0.0	0.0	0.0	0.0	0.0
16	50	-234.8	0.0	0.0	0.0	0.0	0.0
	45	234.8	0.0	0.0	0.0	0.0	0.0
17	50	628.6	0.0	0.0	0.0	0.0	0.0
	45	-628.6	-0.0	-0.0	0.0	0.0	0.0
1	43	403.6	-0.0	-0.0	0.0	0.0	0.0
	50	-403.6	-0.0	-0.0	0.0	0.0	0.0
2	43	411.0	-0.0	-0.0	0.0	0.0	0.0
	50	-411.0	-0.0	-0.0	0.0	0.0	0.0
3	43	385.6	-0.0	-0.0	0.0	0.0	0.0
	50	-385.6	-0.0	-0.0	0.0	0.0	0.0
4	43	-1441.5	0.0	0.0	0.0	0.0	0.0
	50	1441.5	-0.0	-0.0	0.0	0.0	0.0
5	43	308.3	0.0	0.0	0.0	0.0	0.0
	50	-308.3	-0.0	-0.0	0.0	0.0	0.0
6	43	-189.7	0.0	0.0	0.0	0.0	0.0
	50	189.7	-0.0	-0.0	0.0	0.0	0.0
7	43	298.9	-0.0	-0.0	0.0	0.0	0.0
	50	-298.9	-0.0	-0.0	0.0	0.0	0.0
8	43	303.9	-0.0	-0.0	0.0	0.0	0.0
	50	-303.9	-0.0	-0.0	0.0	0.0	0.0
9	43	286.9	-0.0	-0.0	0.0	0.0	0.0
	50	-286.9	-0.0	-0.0	0.0	0.0	0.0
10	43	-931.1	0.0	0.0	0.0	0.0	0.0
	50	931.1	-0.0	-0.0	0.0	0.0	0.0
11	43	259.1	0.0	0.0	0.0	0.0	0.0
	50	-259.1	-0.0	-0.0	0.0	0.0	0.0
12	43	263.8	-0.0	-0.0	0.0	0.0	0.0
	50	-263.8	-0.0	-0.0	0.0	0.0	0.0
13	43	251.9	0.0	0.0	0.0	0.0	0.0
	50	-251.9	-0.0	-0.0	0.0	0.0	0.0
14	43	16.8	0.0	0.0	0.0	0.0	0.0
	50	-16.8	-0.0	-0.0	0.0	0.0	0.0
15	43	315.9	-0.0	-0.0	0.0	0.0	0.0
	50	-315.9	-0.0	-0.0	0.0	0.0	0.0
16	43	307.6	0.0	0.0	0.0	0.0	0.0
	50	-307.6	-0.0	-0.0	0.0	0.0	0.0
17	43	-234.7	0.0	0.0	0.0	0.0	0.0
	50	234.7	-0.0	-0.0	0.0	0.0	0.0

Comb.	Nodo	N [kg]	T1-2 [kg]	T1-3 [kg]	Mt [kgm]	M1-3 [kgm]	M1-2 [kgm]
1	48	420.4	-0.0	-0.0	0.0	0.0	0.0
	43	-420.4	0.0	0.0	0.0	0.0	0.0
2	48	925.5	-0.0	-0.0	0.0	0.0	0.0
	43	-925.5	0.0	0.0	0.0	0.0	0.0
3	48	420.7	-0.0	-0.0	0.0	0.0	0.0
	43	-420.7	0.0	0.0	0.0	0.0	0.0
4	48	1645.9	0.0	0.0	0.0	0.0	0.0
	43	-1645.9	-0.0	-0.0	0.0	0.0	0.0
5	48	-533.1	-0.0	-0.0	0.0	0.0	0.0
	43	533.1	-0.0	-0.0	0.0	0.0	0.0
6	48	-38.9	0.0	0.0	0.0	0.0	0.0
	43	38.9	-0.0	-0.0	0.0	0.0	0.0
7	48	260.4	-0.0	-0.0	0.0	0.0	0.0
	43	-260.4	0.0	0.0	0.0	0.0	0.0
8	48	597.1	-0.0	-0.0	0.0	0.0	0.0
	43	-597.1	0.0	0.0	0.0	0.0	0.0
9	48	260.6	-0.0	-0.0	0.0	0.0	0.0
	43	-260.6	0.0	0.0	0.0	0.0	0.0
10	48	1077.4	0.0	0.0	0.0	0.0	0.0
	43	-1077.4	-0.0	-0.0	0.0	0.0	0.0
11	48	-219.9	0.0	0.0	0.0	0.0	0.0
	43	219.9	-0.0	-0.0	0.0	0.0	0.0
12	48	-54.3	-0.0	-0.0	0.0	0.0	0.0
	43	54.3	0.0	0.0	0.0	0.0	0.0
13	48	-188.5	0.0	0.0	0.0	0.0	0.0
	43	188.5	-0.0	-0.0	0.0	0.0	0.0
14	48	41.8	0.0	0.0	0.0	0.0	0.0
	43	-41.8	-0.0	-0.0	0.0	0.0	0.0
15	48	597.0	-0.0	-0.0	0.0	0.0	0.0
	43	-597.0	0.0	0.0	0.0	0.0	0.0
16	48	-561.9	-0.0	-0.0	0.0	0.0	0.0
	43	561.9	-0.0	-0.0	0.0	0.0	0.0
17	48	-19.7	0.0	0.0	0.0	0.0	0.0
	43	19.7	-0.0	-0.0	0.0	0.0	0.0
1	41	-769.1	0.0	0.0	0.0	0.0	0.0
	48	769.1	-0.0	-0.0	0.0	0.0	0.0
2	41	-1500.8	0.0	0.0	0.0	0.0	0.0
	48	1500.8	-0.0	-0.0	0.0	0.0	0.0
3	41	-768.0	0.0	0.0	0.0	0.0	0.0
	48	768.0	-0.0	-0.0	0.0	0.0	0.0
4	41	-4526.7	-0.0	-0.0	0.0	0.0	0.0
	48	4526.7	-0.0	-0.0	0.0	0.0	0.0
5	41	295.1	0.0	0.0	0.0	0.0	0.0
	48	-295.1	-0.0	-0.0	0.0	0.0	0.0
6	41	24.3	0.0	0.0	0.0	0.0	0.0
	48	-24.3	-0.0	-0.0	0.0	0.0	0.0

Comb.	Nodo	N [kg]	T1-2 [kg]	T1-3 [kg]	Mt [kgm]	M1-3 [kgm]	M1-2 [kgm]
7	41	-491.1	0.0	0.0	0.0	0.0	0.0
	48	491.1	-0.0	-0.0	0.0	0.0	0.0
8	41	-978.9	0.0	0.0	0.0	0.0	0.0
	48	978.9	-0.0	-0.0	0.0	0.0	0.0
9	41	-490.4	0.0	0.0	0.0	0.0	0.0
	48	490.4	-0.0	-0.0	0.0	0.0	0.0
10	41	-2996.2	-0.0	-0.0	0.0	0.0	0.0
	48	2996.2	-0.0	-0.0	0.0	0.0	0.0
11	41	221.3	-0.0	-0.0	0.0	0.0	0.0
	48	-221.3	-0.0	-0.0	0.0	0.0	0.0
12	41	-20.4	0.0	0.0	0.0	0.0	0.0
	48	20.4	-0.0	-0.0	0.0	0.0	0.0
13	41	194.4	-0.0	-0.0	0.0	0.0	0.0
	48	-194.4	-0.0	-0.0	0.0	0.0	0.0
14	41	-423.8	-0.0	-0.0	0.0	0.0	0.0
	48	423.8	-0.0	-0.0	0.0	0.0	0.0
15	41	-979.6	0.0	0.0	0.0	0.0	0.0
	48	979.6	-0.0	-0.0	0.0	0.0	0.0
16	41	291.6	0.0	0.0	0.0	0.0	0.0
	48	-291.6	-0.0	-0.0	0.0	0.0	0.0
17	41	2.2	0.0	0.0	0.0	0.0	0.0
	48	-2.2	-0.0	-0.0	0.0	0.0	0.0
1	35	3325.1	0.0	-0.0	0.0	0.0	0.0
	41	-3325.1	0.0	0.0	0.0	0.0	0.0
2	35	5260.4	0.0	-0.0	0.0	0.0	0.0
	41	-5260.4	0.0	0.0	0.0	0.0	0.0
3	35	3340.7	0.0	-0.0	0.0	0.0	0.0
	41	-3340.7	0.0	0.0	0.0	0.0	0.0
4	35	-2726.8	0.0	0.0	0.0	0.0	0.0
	41	2726.8	0.0	-0.0	0.0	0.0	0.0
5	35	646.3	0.0	-0.0	0.0	0.0	0.0
	41	-646.3	0.0	0.0	0.0	0.0	0.0
6	35	1026.8	0.0	-0.0	0.0	0.0	0.0
	41	-1026.8	0.0	0.0	0.0	0.0	0.0
7	35	2240.8	0.0	-0.0	0.0	0.0	0.0
	41	-2240.8	0.0	0.0	0.0	0.0	0.0
8	35	3530.9	0.0	-0.0	0.0	0.0	0.0
	41	-3530.9	0.0	0.0	0.0	0.0	0.0
9	35	2251.2	0.0	-0.0	0.0	0.0	0.0
	41	-2251.2	0.0	0.0	0.0	0.0	0.0
10	35	-1793.8	0.0	0.0	0.0	0.0	0.0
	41	1793.8	0.0	-0.0	0.0	0.0	0.0
11	35	286.4	0.0	-0.0	0.0	0.0	0.0
	41	-286.4	0.0	0.0	0.0	0.0	0.0
12	35	934.7	0.0	-0.0	0.0	0.0	0.0
	41	-934.7	0.0	0.0	0.0	0.0	0.0

Comb.	Nodo	N [kg]	T1-2 [kg]	T1-3 [kg]	Mt [kgm]	M1-3 [kgm]	M1-2 [kgm]
13	35	231.7	0.0	-0.0	0.0	0.0	0.0
	41	-231.7	0.0	0.0	0.0	0.0	0.0
14	35	-130.2	0.0	-0.0	0.0	0.0	0.0
	41	130.2	0.0	0.0	0.0	0.0	0.0
15	35	3520.5	0.0	-0.0	0.0	0.0	0.0
	41	-3520.5	0.0	0.0	0.0	0.0	0.0
16	35	678.3	0.0	-0.0	0.0	0.0	0.0
	41	-678.3	0.0	0.0	0.0	0.0	0.0
17	35	1098.5	0.0	-0.0	0.0	0.0	0.0
	41	-1098.5	0.0	0.0	0.0	0.0	0.0
1	43	-866.4	0.0	0.0	0.0	0.0	0.0
	35	866.4	0.0	-0.0	0.0	0.0	0.0
2	43	-1185.6	0.0	0.0	0.0	0.0	0.0
	35	1185.6	0.0	-0.0	0.0	0.0	0.0
3	43	-872.9	0.0	0.0	0.0	0.0	0.0
	35	872.9	0.0	-0.0	0.0	0.0	0.0
4	43	1538.1	0.0	0.0	0.0	0.0	0.0
	35	-1538.1	0.0	-0.0	0.0	0.0	0.0
5	43	-622.3	0.0	-0.0	0.0	0.0	0.0
	35	622.3	0.0	0.0	0.0	0.0	0.0
6	43	-1053.1	0.0	0.0	0.0	0.0	0.0
	35	1053.1	0.0	-0.0	0.0	0.0	0.0
7	43	-600.2	0.0	0.0	0.0	0.0	0.0
	35	600.2	0.0	-0.0	0.0	0.0	0.0
8	43	-813.0	0.0	0.0	0.0	0.0	0.0
	35	813.0	0.0	-0.0	0.0	0.0	0.0
9	43	-604.5	0.0	0.0	0.0	0.0	0.0
	35	604.5	0.0	-0.0	0.0	0.0	0.0
10	43	1002.8	0.0	0.0	0.0	0.0	0.0
	35	-1002.8	0.0	-0.0	0.0	0.0	0.0
11	43	-257.9	0.0	-0.0	0.0	0.0	0.0
	35	257.9	0.0	0.0	0.0	0.0	0.0
12	43	-367.3	0.0	0.0	0.0	0.0	0.0
	35	367.3	0.0	-0.0	0.0	0.0	0.0
13	43	-215.5	0.0	0.0	0.0	0.0	0.0
	35	215.5	0.0	-0.0	0.0	0.0	0.0
14	43	-4.1	0.0	-0.0	0.0	0.0	0.0
	35	4.1	0.0	0.0	0.0	0.0	0.0
15	43	-808.7	0.0	0.0	0.0	0.0	0.0
	35	808.7	0.0	-0.0	0.0	0.0	0.0
16	43	-657.9	0.0	0.0	0.0	0.0	0.0
	35	657.9	0.0	-0.0	0.0	0.0	0.0
17	43	-1131.5	0.0	0.0	0.0	0.0	0.0
	35	1131.5	0.0	-0.0	0.0	0.0	0.0
1	37	2249.9	0.0	-0.0	0.0	0.0	0.0

Comb.	Nodo	N [kg]	T1-2 [kg]	T1-3 [kg]	Mt [kgm]	M1-3 [kgm]	M1-2 [kgm]
	43	-2249.9	0.0	0.0	0.0	0.0	0.0
2	37	3184.8	0.0	-0.0	0.0	0.0	0.0
	43	-3184.8	0.0	0.0	0.0	0.0	0.0
3	37	2213.3	0.0	-0.0	0.0	0.0	0.0
	43	-2213.3	0.0	0.0	0.0	0.0	0.0
4	37	199.4	0.0	0.0	0.0	0.0	0.0
	43	-199.4	0.0	-0.0	0.0	0.0	0.0
5	37	911.7	0.0	-0.0	0.0	0.0	0.0
	43	-911.7	0.0	0.0	0.0	0.0	0.0
6	37	1328.2	0.0	-0.0	0.0	0.0	0.0
	43	-1328.2	0.0	0.0	0.0	0.0	0.0
7	37	1556.9	0.0	-0.0	0.0	0.0	0.0
	43	-1556.9	0.0	0.0	0.0	0.0	0.0
8	37	2180.2	0.0	-0.0	0.0	0.0	0.0
	43	-2180.2	0.0	0.0	0.0	0.0	0.0
9	37	1532.5	0.0	-0.0	0.0	0.0	0.0
	43	-1532.5	0.0	0.0	0.0	0.0	0.0
10	37	189.9	0.0	0.0	0.0	0.0	0.0
	43	-189.9	0.0	-0.0	0.0	0.0	0.0
11	37	541.3	0.0	0.0	0.0	0.0	0.0
	43	-541.3	0.0	-0.0	0.0	0.0	0.0
12	37	859.1	0.0	-0.0	0.0	0.0	0.0
	43	-859.1	0.0	0.0	0.0	0.0	0.0
13	37	507.7	0.0	0.0	0.0	0.0	0.0
	43	-507.7	0.0	-0.0	0.0	0.0	0.0
14	37	461.1	0.0	0.0	0.0	0.0	0.0
	43	-461.1	0.0	-0.0	0.0	0.0	0.0
15	37	2204.6	0.0	-0.0	0.0	0.0	0.0
	43	-2204.6	0.0	0.0	0.0	0.0	0.0
16	37	951.9	0.0	-0.0	0.0	0.0	0.0
	43	-951.9	0.0	0.0	0.0	0.0	0.0
17	37	1406.0	0.0	-0.0	0.0	0.0	0.0
	43	-1406.0	0.0	0.0	0.0	0.0	0.0
1	45	-803.6	0.0	-0.0	0.0	0.0	0.0
	37	803.6	-0.0	0.0	0.0	0.0	0.0
2	45	-284.0	0.0	-0.0	0.0	0.0	0.0
	37	284.0	-0.0	0.0	0.0	0.0	0.0
3	45	-698.7	0.0	-0.0	0.0	0.0	0.0
	37	698.7	-0.0	0.0	0.0	0.0	0.0
4	45	-1187.1	-0.0	0.0	0.0	0.0	0.0
	37	1187.1	0.0	-0.0	0.0	0.0	0.0
5	45	-1450.2	0.0	-0.0	0.0	0.0	0.0
	37	1450.2	-0.0	0.0	0.0	0.0	0.0
6	45	-1800.7	0.0	-0.0	0.0	0.0	0.0
	37	1800.7	-0.0	0.0	0.0	0.0	0.0
7	45	-643.8	0.0	-0.0	0.0	0.0	0.0

Comb.	Nodo	N [kg]	T1-2 [kg]	T1-3 [kg]	Mt [kgm]	M1-3 [kgm]	M1-2 [kgm]
	37	643.8	-0.0	0.0	0.0	0.0	0.0
8	45	-297.4	0.0	-0.0	0.0	0.0	0.0
	37	297.4	-0.0	0.0	0.0	0.0	0.0
9	45	-573.9	0.0	-0.0	0.0	0.0	0.0
	37	573.9	-0.0	0.0	0.0	0.0	0.0
10	45	-899.5	-0.0	0.0	0.0	0.0	0.0
	37	899.5	0.0	-0.0	0.0	0.0	0.0
11	45	-984.9	-0.0	0.0	0.0	0.0	0.0
	37	984.9	0.0	-0.0	0.0	0.0	0.0
12	45	-823.8	0.0	-0.0	0.0	0.0	0.0
	37	823.8	-0.0	0.0	0.0	0.0	0.0
13	45	-956.7	-0.0	0.0	0.0	0.0	0.0
	37	956.7	0.0	-0.0	0.0	0.0	0.0
14	45	-944.2	-0.0	0.0	0.0	0.0	0.0
	37	944.2	0.0	-0.0	0.0	0.0	0.0
15	45	-367.3	0.0	-0.0	0.0	0.0	0.0
	37	367.3	-0.0	0.0	0.0	0.0	0.0
16	45	-1495.6	0.0	-0.0	0.0	0.0	0.0
	37	1495.6	-0.0	0.0	0.0	0.0	0.0
17	45	-1876.7	-0.0	0.0	0.0	0.0	0.0
	37	1876.7	0.0	-0.0	0.0	0.0	0.0
1	44	-4137.4	0.0	-0.0	0.0	0.0	0.0
	38	4137.4	0.0	0.0	0.0	0.0	0.0
2	44	-5211.9	0.0	-0.0	0.0	0.0	0.0
	38	5211.9	0.0	0.0	0.0	0.0	0.0
3	44	-3811.7	0.0	-0.0	0.0	0.0	0.0
	38	3811.7	0.0	0.0	0.0	0.0	0.0
4	44	-2548.0	0.0	0.0	0.0	0.0	0.0
	38	2548.0	0.0	-0.0	0.0	0.0	0.0
5	44	-1202.2	0.0	0.0	0.0	0.0	0.0
	38	1202.2	0.0	-0.0	0.0	0.0	0.0
6	44	-860.3	0.0	-0.0	0.0	0.0	0.0
	38	860.3	0.0	0.0	0.0	0.0	0.0
7	44	-2939.6	0.0	-0.0	0.0	0.0	0.0
	38	2939.6	0.0	0.0	0.0	0.0	0.0
8	44	-3655.9	0.0	-0.0	0.0	0.0	0.0
	38	3655.9	0.0	0.0	0.0	0.0	0.0
9	44	-2722.4	0.0	-0.0	0.0	0.0	0.0
	38	2722.4	0.0	0.0	0.0	0.0	0.0
10	44	-1880.0	0.0	0.0	0.0	0.0	0.0
	38	1880.0	0.0	-0.0	0.0	0.0	0.0
11	44	-1462.2	0.0	-0.0	0.0	0.0	0.0
	38	1462.2	0.0	0.0	0.0	0.0	0.0
12	44	-1841.0	0.0	-0.0	0.0	0.0	0.0
	38	1841.0	0.0	0.0	0.0	0.0	0.0
13	44	-1570.2	0.0	0.0	0.0	0.0	0.0

Comb.	Nodo	N [kg]	T1-2 [kg]	T1-3 [kg]	Mt [kgm]	M1-3 [kgm]	M1-2 [kgm]
	38	1570.2	0.0	-0.0	0.0	0.0	0.0
14	44	-1485.8	0.0	0.0	0.0	0.0	0.0
	38	1485.8	0.0	-0.0	0.0	0.0	0.0
15	44	-3873.1	0.0	-0.0	0.0	0.0	0.0
	38	3873.1	0.0	0.0	0.0	0.0	0.0
16	44	-1157.8	0.0	0.0	0.0	0.0	0.0
	38	1157.8	0.0	-0.0	0.0	0.0	0.0
17	44	-783.0	0.0	-0.0	0.0	0.0	0.0
	38	783.0	0.0	0.0	0.0	0.0	0.0
1	36	470.7	0.0	0.0	0.0	0.0	0.0
	44	-470.7	0.0	-0.0	0.0	0.0	0.0
2	36	980.3	0.0	0.0	0.0	0.0	0.0
	44	-980.3	0.0	-0.0	0.0	0.0	0.0
3	36	468.2	0.0	0.0	0.0	0.0	0.0
	44	-468.2	0.0	-0.0	0.0	0.0	0.0
4	36	38.9	0.0	0.0	0.0	0.0	0.0
	44	-38.9	0.0	-0.0	0.0	0.0	0.0
5	36	-561.8	0.0	0.0	0.0	0.0	0.0
	44	561.8	0.0	-0.0	0.0	0.0	0.0
6	36	-971.8	0.0	-0.0	0.0	0.0	0.0
	44	971.8	0.0	0.0	0.0	0.0	0.0
7	36	294.6	0.0	0.0	0.0	0.0	0.0
	44	-294.6	0.0	-0.0	0.0	0.0	0.0
8	36	634.3	0.0	0.0	0.0	0.0	0.0
	44	-634.3	0.0	-0.0	0.0	0.0	0.0
9	36	292.9	0.0	0.0	0.0	0.0	0.0
	44	-292.9	0.0	-0.0	0.0	0.0	0.0
10	36	6.7	0.0	0.0	0.0	0.0	0.0
	44	-6.7	0.0	-0.0	0.0	0.0	0.0
11	36	-199.0	0.0	-0.0	0.0	0.0	0.0
	44	199.0	0.0	0.0	0.0	0.0	0.0
12	36	-31.1	0.0	0.0	0.0	0.0	0.0
	44	31.1	0.0	-0.0	0.0	0.0	0.0
13	36	-173.3	0.0	-0.0	0.0	0.0	0.0
	44	173.3	0.0	0.0	0.0	0.0	0.0
14	36	-156.6	0.0	0.0	0.0	0.0	0.0
	44	156.6	0.0	-0.0	0.0	0.0	0.0
15	36	636.0	0.0	0.0	0.0	0.0	0.0
	44	-636.0	0.0	-0.0	0.0	0.0	0.0
16	36	-599.1	0.0	-0.0	0.0	0.0	0.0
	44	599.1	0.0	0.0	0.0	0.0	0.0
17	36	-1048.6	0.0	-0.0	0.0	0.0	0.0
	44	1048.6	0.0	0.0	0.0	0.0	0.0
1	42	2776.6	0.0	-0.0	0.0	0.0	0.0
	36	-2776.6	0.0	0.0	0.0	0.0	0.0

Comb.	Nodo	N [kg]	T1-2 [kg]	T1-3 [kg]	Mt [kgm]	M1-3 [kgm]	M1-2 [kgm]
2	42	4388.4	0.0	-0.0	0.0	0.0	0.0
	36	-4388.4	0.0	0.0	0.0	0.0	0.0
3	42	2777.1	0.0	-0.0	0.0	0.0	0.0
	36	-2777.1	0.0	0.0	0.0	0.0	0.0
4	42	-903.8	0.0	-0.0	0.0	0.0	0.0
	36	903.8	0.0	0.0	0.0	0.0	0.0
5	42	217.6	0.0	0.0	0.0	0.0	0.0
	36	-217.6	0.0	-0.0	0.0	0.0	0.0
6	42	944.0	0.0	-0.0	0.0	0.0	0.0
	36	-944.0	0.0	0.0	0.0	0.0	0.0
7	42	1873.8	0.0	-0.0	0.0	0.0	0.0
	36	-1873.8	0.0	0.0	0.0	0.0	0.0
8	42	2948.3	0.0	-0.0	0.0	0.0	0.0
	36	-2948.3	0.0	0.0	0.0	0.0	0.0
9	42	1874.1	0.0	-0.0	0.0	0.0	0.0
	36	-1874.1	0.0	0.0	0.0	0.0	0.0
10	42	-579.8	0.0	-0.0	0.0	0.0	0.0
	36	579.8	0.0	0.0	0.0	0.0	0.0
11	42	238.9	0.0	-0.0	0.0	0.0	0.0
	36	-238.9	0.0	0.0	0.0	0.0	0.0
12	42	778.7	0.0	-0.0	0.0	0.0	0.0
	36	-778.7	0.0	0.0	0.0	0.0	0.0
13	42	208.1	0.0	-0.0	0.0	0.0	0.0
	36	-208.1	0.0	0.0	0.0	0.0	0.0
14	42	73.1	0.0	-0.0	0.0	0.0	0.0
	36	-73.1	0.0	0.0	0.0	0.0	0.0
15	42	2948.0	0.0	-0.0	0.0	0.0	0.0
	36	-2948.0	0.0	0.0	0.0	0.0	0.0
16	42	222.7	0.0	-0.0	0.0	0.0	0.0
	36	-222.7	0.0	0.0	0.0	0.0	0.0
17	42	1015.0	0.0	0.0	0.0	0.0	0.0
	36	-1015.0	0.0	-0.0	0.0	0.0	0.0
1	34	-2416.8	0.0	-0.0	0.0	0.0	0.0
	42	2416.8	0.0	0.0	0.0	0.0	0.0
2	34	-3958.5	0.0	-0.0	0.0	0.0	0.0
	42	3958.5	0.0	0.0	0.0	0.0	0.0
3	34	-2435.5	0.0	-0.0	0.0	0.0	0.0
	42	2435.5	0.0	0.0	0.0	0.0	0.0
4	34	1670.8	0.0	0.0	0.0	0.0	0.0
	42	-1670.8	0.0	-0.0	0.0	0.0	0.0
5	34	-504.9	0.0	-0.0	0.0	0.0	0.0
	42	504.9	0.0	0.0	0.0	0.0	0.0
6	34	-995.9	0.0	0.0	0.0	0.0	0.0
	42	995.9	0.0	-0.0	0.0	0.0	0.0
7	34	-1616.8	0.0	-0.0	0.0	0.0	0.0
	42	1616.8	0.0	0.0	0.0	0.0	0.0

Comb.	Nodo	N [kg]	T1-2 [kg]	T1-3 [kg]	Mt [kgm]	M1-3 [kgm]	M1-2 [kgm]
8	34	-2644.5	0.0	-0.0	0.0	0.0	0.0
	42	2644.5	0.0	0.0	0.0	0.0	0.0
9	34	-1629.2	0.0	-0.0	0.0	0.0	0.0
	42	1629.2	0.0	0.0	0.0	0.0	0.0
10	34	1108.3	0.0	0.0	0.0	0.0	0.0
	42	-1108.3	0.0	-0.0	0.0	0.0	0.0
11	34	-82.1	0.0	0.0	0.0	0.0	0.0
	42	82.1	0.0	-0.0	0.0	0.0	0.0
12	34	-596.6	0.0	-0.0	0.0	0.0	0.0
	42	596.6	0.0	0.0	0.0	0.0	0.0
13	34	-55.2	0.0	-0.0	0.0	0.0	0.0
	42	55.2	0.0	0.0	0.0	0.0	0.0
14	34	153.9	0.0	0.0	0.0	0.0	0.0
	42	-153.9	0.0	-0.0	0.0	0.0	0.0
15	34	-2632.1	0.0	-0.0	0.0	0.0	0.0
	42	2632.1	0.0	0.0	0.0	0.0	0.0
16	34	-544.2	0.0	0.0	0.0	0.0	0.0
	42	544.2	0.0	-0.0	0.0	0.0	0.0
17	34	-1082.2	0.0	0.0	0.0	0.0	0.0
	42	1082.2	0.0	-0.0	0.0	0.0	0.0
1	42	1507.1	0.0	-0.0	0.0	0.0	0.0
	47	-1507.1	-0.0	0.0	0.0	0.0	0.0
2	42	2649.2	0.0	-0.0	0.0	0.0	0.0
	47	-2649.2	-0.0	0.0	0.0	0.0	0.0
3	42	1506.9	0.0	-0.0	0.0	0.0	0.0
	47	-1506.9	-0.0	0.0	0.0	0.0	0.0
4	42	1853.1	0.0	-0.0	0.0	0.0	0.0
	47	-1853.1	0.0	-0.0	0.0	0.0	0.0
5	42	-581.8	-0.0	0.0	0.0	0.0	0.0
	47	581.8	0.0	-0.0	0.0	0.0	0.0
6	42	150.2	-0.0	0.0	0.0	0.0	0.0
	47	-150.2	-0.0	0.0	0.0	0.0	0.0
7	42	991.6	0.0	-0.0	0.0	0.0	0.0
	47	-991.6	-0.0	0.0	0.0	0.0	0.0
8	42	1753.0	0.0	-0.0	0.0	0.0	0.0
	47	-1753.0	-0.0	0.0	0.0	0.0	0.0
9	42	991.5	0.0	-0.0	0.0	0.0	0.0
	47	-991.5	-0.0	0.0	0.0	0.0	0.0
10	42	1222.3	0.0	-0.0	0.0	0.0	0.0
	47	-1222.3	0.0	-0.0	0.0	0.0	0.0
11	42	-137.2	0.0	-0.0	0.0	0.0	0.0
	47	137.2	-0.0	0.0	0.0	0.0	0.0
12	42	242.0	0.0	-0.0	0.0	0.0	0.0
	47	-242.0	-0.0	0.0	0.0	0.0	0.0
13	42	-119.8	0.0	-0.0	0.0	0.0	0.0
	47	119.8	-0.0	0.0	0.0	0.0	0.0

Comb.	Nodo	N [kg]	T1-2 [kg]	T1-3 [kg]	Mt [kgm]	M1-3 [kgm]	M1-2 [kgm]
14	42	135.9	0.0	-0.0	0.0	0.0	0.0
	47	-135.9	-0.0	0.0	0.0	0.0	0.0
15	42	1753.2	0.0	-0.0	0.0	0.0	0.0
	47	-1753.2	-0.0	0.0	0.0	0.0	0.0
16	42	-621.0	-0.0	0.0	0.0	0.0	0.0
	47	621.0	0.0	-0.0	0.0	0.0	0.0
17	42	183.6	-0.0	0.0	0.0	0.0	0.0
	47	-183.6	0.0	-0.0	0.0	0.0	0.0
1	49	-323.5	-0.0	0.0	0.0	0.0	0.0
	42	323.5	-0.0	0.0	0.0	0.0	0.0
2	49	-864.6	-0.0	0.0	0.0	0.0	0.0
	42	864.6	-0.0	0.0	0.0	0.0	0.0
3	49	-347.4	-0.0	0.0	0.0	0.0	0.0
	42	347.4	-0.0	0.0	0.0	0.0	0.0
4	49	-2406.7	0.0	-0.0	0.0	0.0	0.0
	42	2406.7	-0.0	0.0	0.0	0.0	0.0
5	49	303.9	0.0	-0.0	0.0	0.0	0.0
	42	-303.9	0.0	-0.0	0.0	0.0	0.0
6	49	-100.1	-0.0	0.0	0.0	0.0	0.0
	42	100.1	-0.0	0.0	0.0	0.0	0.0
7	49	-182.0	-0.0	0.0	0.0	0.0	0.0
	42	182.0	-0.0	0.0	0.0	0.0	0.0
8	49	-542.8	-0.0	0.0	0.0	0.0	0.0
	42	542.8	-0.0	0.0	0.0	0.0	0.0
9	49	-198.0	-0.0	0.0	0.0	0.0	0.0
	42	198.0	-0.0	0.0	0.0	0.0	0.0
10	49	-1570.9	0.0	-0.0	0.0	0.0	0.0
	42	1570.9	-0.0	0.0	0.0	0.0	0.0
11	49	311.6	-0.0	0.0	0.0	0.0	0.0
	42	-311.6	-0.0	0.0	0.0	0.0	0.0
12	49	134.7	-0.0	0.0	0.0	0.0	0.0
	42	-134.7	-0.0	0.0	0.0	0.0	0.0
13	49	296.4	0.0	-0.0	0.0	0.0	0.0
	42	-296.4	-0.0	0.0	0.0	0.0	0.0
14	49	-70.9	0.0	-0.0	0.0	0.0	0.0
	42	70.9	-0.0	0.0	0.0	0.0	0.0
15	49	-526.8	-0.0	0.0	0.0	0.0	0.0
	42	526.8	-0.0	0.0	0.0	0.0	0.0
16	49	296.1	0.0	-0.0	0.0	0.0	0.0
	42	-296.1	0.0	-0.0	0.0	0.0	0.0
17	49	-142.3	0.0	-0.0	0.0	0.0	0.0
	42	142.3	-0.0	0.0	0.0	0.0	0.0
1	61	-1031.7	-0.0	-0.0	0.0	0.0	0.0
	55	1031.7	0.0	0.0	0.0	0.0	0.0
2	61	-1521.3	0.0	0.0	0.0	0.0	0.0

Comb.	Nodo	N [kg]	T1-2 [kg]	T1-3 [kg]	Mt [kgm]	M1-3 [kgm]	M1-2 [kgm]
	55	1521.3	-0.0	-0.0	0.0	0.0	0.0
3	61	-1156.0	-0.0	-0.0	0.0	0.0	0.0
	55	1156.0	0.0	0.0	0.0	0.0	0.0
4	61	1489.6	-0.0	-0.0	0.0	0.0	0.0
	55	-1489.6	0.0	0.0	0.0	0.0	0.0
5	61	-995.8	-0.0	-0.0	0.0	0.0	0.0
	55	995.8	0.0	0.0	0.0	0.0	0.0
6	61	-693.2	-0.0	-0.0	0.0	0.0	0.0
	55	693.2	0.0	0.0	0.0	0.0	0.0
7	61	-688.7	-0.0	-0.0	0.0	0.0	0.0
	55	688.7	0.0	0.0	0.0	0.0	0.0
8	61	-1015.1	0.0	-0.0	0.0	0.0	0.0
	55	1015.1	-0.0	0.0	0.0	0.0	0.0
9	61	-771.5	-0.0	-0.0	0.0	0.0	0.0
	55	771.5	0.0	0.0	0.0	0.0	0.0
10	61	992.2	-0.0	-0.0	0.0	0.0	0.0
	55	-992.2	0.0	0.0	0.0	0.0	0.0
11	61	-253.7	-0.0	-0.0	0.0	0.0	0.0
	55	253.7	0.0	0.0	0.0	0.0	0.0
12	61	-420.1	-0.0	-0.0	0.0	0.0	0.0
	55	420.1	0.0	0.0	0.0	0.0	0.0
13	61	-84.8	-0.0	-0.0	0.0	0.0	0.0
	55	84.8	0.0	0.0	0.0	0.0	0.0
14	61	-18.6	-0.0	-0.0	0.0	0.0	0.0
	55	18.6	0.0	0.0	0.0	0.0	0.0
15	61	-932.2	0.0	0.0	0.0	0.0	0.0
	55	932.2	-0.0	-0.0	0.0	0.0	0.0
16	61	-1093.4	-0.0	-0.0	0.0	0.0	0.0
	55	1093.4	0.0	0.0	0.0	0.0	0.0
17	61	-765.3	-0.0	-0.0	0.0	0.0	0.0
	55	765.3	0.0	0.0	0.0	0.0	0.0
1	55	2313.3	0.0	-0.0	0.0	0.0	0.0
	63	-2313.3	0.0	0.0	0.0	0.0	0.0
2	55	3631.1	0.0	-0.0	0.0	0.0	0.0
	63	-3631.1	0.0	0.0	0.0	0.0	0.0
3	55	2433.0	0.0	-0.0	0.0	0.0	0.0
	63	-2433.0	0.0	0.0	0.0	0.0	0.0
4	55	-1710.3	0.0	-0.0	0.0	0.0	0.0
	63	1710.3	0.0	0.0	0.0	0.0	0.0
5	55	1184.5	0.0	0.0	0.0	0.0	0.0
	63	-1184.5	0.0	-0.0	0.0	0.0	0.0
6	55	874.5	0.0	0.0	0.0	0.0	0.0
	63	-874.5	0.0	-0.0	0.0	0.0	0.0
7	55	1546.1	0.0	-0.0	0.0	0.0	0.0
	63	-1546.1	0.0	0.0	0.0	0.0	0.0
8	55	2424.6	0.0	-0.0	0.0	0.0	0.0

Comb.	Nodo	N [kg]	T1-2 [kg]	T1-3 [kg]	Mt [kgm]	M1-3 [kgm]	M1-2 [kgm]
	63	-2424.6	0.0	0.0	0.0	0.0	0.0
9	55	1625.9	0.0	-0.0	0.0	0.0	0.0
	63	-1625.9	0.0	0.0	0.0	0.0	0.0
10	55	-1136.4	0.0	-0.0	0.0	0.0	0.0
	63	1136.4	0.0	0.0	0.0	0.0	0.0
11	55	277.3	0.0	-0.0	0.0	0.0	0.0
	63	-277.3	0.0	0.0	0.0	0.0	0.0
12	55	720.0	0.0	-0.0	0.0	0.0	0.0
	63	-720.0	0.0	0.0	0.0	0.0	0.0
13	55	110.0	0.0	-0.0	0.0	0.0	0.0
	63	-110.0	0.0	0.0	0.0	0.0	0.0
14	55	7.8	0.0	-0.0	0.0	0.0	0.0
	63	-7.8	0.0	0.0	0.0	0.0	0.0
15	55	2344.8	0.0	-0.0	0.0	0.0	0.0
	63	-2344.8	0.0	0.0	0.0	0.0	0.0
16	55	1294.6	0.0	-0.0	0.0	0.0	0.0
	63	-1294.6	0.0	0.0	0.0	0.0	0.0
17	55	956.3	0.0	-0.0	0.0	0.0	0.0
	63	-956.3	0.0	0.0	0.0	0.0	0.0

2.3 Sollecitazioni nelle travi di fondazione

Convenzioni adottate

Le sollecitazioni nelle travi di fondazione sono da intendersi nel sistema di riferimento locale dell'elemento, e si riferiscono all'asta. L'orientamento della trave nello spazio è definito a mezzo del nodo *K*.

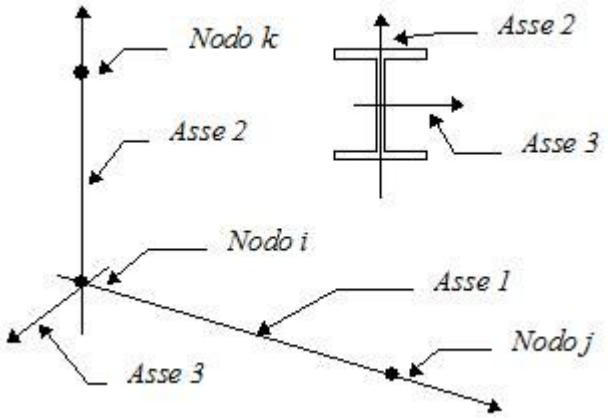

La terna di riferimento locale dell'asta è così disposta

Per quanto concerne i segni positivi assunti per le varie componenti di sollecitaione si assumono come positivi i versi e le sollecitazioni se così diretti:

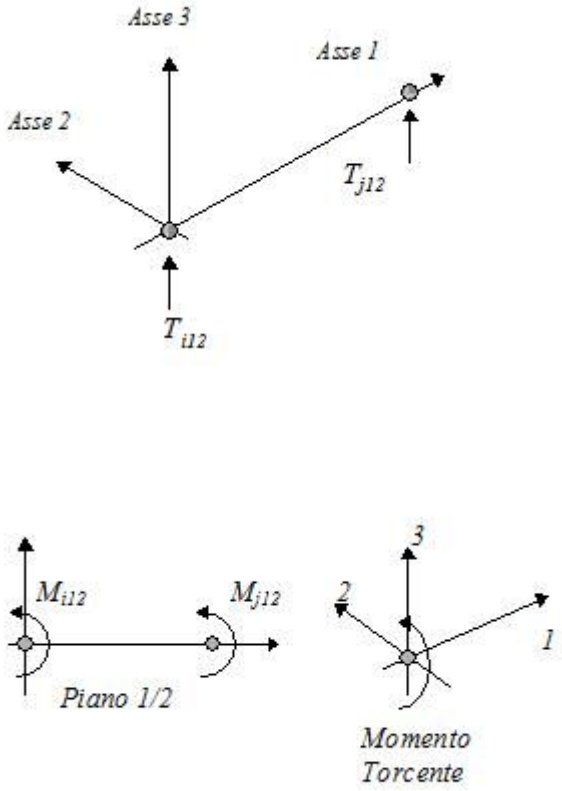

La trave è da considerarsi appoggiata su un sottospazio elastico a comportamento bilatero (terreno alla Winkler).

Comb.	Nodo	Presione [kg/cm²]	Mt [kgm]	Taglio [kg]	MFlet. [kgm]
1	1	0.6	0.0	-9208.0	-5213.5
	2	0.3	0.0	-3725.5	525.1
2	1	0.4	0.0	-6880.7	-3811.3
	2	0.2	0.0	-3194.8	659.3
3	1	0.5	0.0	-8463.2	-4652.2
	2	0.3	0.0	-4102.4	923.2
4	1	0.7	0.0	-10684.8	-6415.9
	2	0.2	0.0	-2542.5	-546.9
5	1	0.4	0.0	-6174.0	-3430.8
	2	0.2	0.0	-2787.6	594.5
6	1	0.4	0.0	-6110.3	-3503.7
	2	0.2	0.0	-2127.9	313.4
7	1	0.4	0.0	-6849.4	-3889.5
	2	0.2	0.0	-2715.9	354.7
8	1	0.3	0.0	-5297.9	-2954.6
	2	0.2	0.0	-2362.1	444.1
9	1	0.4	0.0	-6352.9	-3515.3
	2	0.2	0.0	-2967.2	620.1
10	1	0.5	0.0	-7833.9	-4691.1

Comb.	Nodo	Presione [kg/cm²]	Mt [kgm]	Taglio [kg]	MFlet. [kgm]
	2	0.2	0.0	-1927.2	-360.0
11	1	0.5	0.0	-7563.5	-4258.6
	2	0.2	0.0	-3175.5	506.3
12	1	0.4	0.0	-6911.8	-3864.4
	2	0.2	0.0	-3034.5	548.8
13	1	0.4	0.0	-6918.7	-4008.1
	2	0.2	0.0	-2358.0	108.1
14	1	0.5	0.0	-7419.0	-4211.7
	2	0.2	0.0	-2947.5	387.9
15	1	0.4	0.0	-5794.4	-3328.8
	2	0.2	0.0	-2110.8	178.8
16	1	0.4	0.0	-6118.9	-3383.9
	2	0.2	0.0	-2839.7	644.4
17	1	0.4	0.0	-6051.0	-3463.7
	2	0.2	0.0	-2124.2	339.5
1	2	0.3	0.0	-4008.3	-1478.2
	3	0.4	0.0	-5468.1	2726.5
2	2	0.2	0.0	-3345.1	-1165.7
	3	0.3	0.0	-4893.5	2489.8
3	2	0.3	0.0	-4255.6	-1439.3
	3	0.4	0.0	-6437.8	3305.4
4	2	0.2	0.0	-2951.2	-830.4
	3	0.3	0.0	-5280.0	2821.8
5	2	0.2	0.0	-3068.3	-1468.2
	3	0.2	0.0	-2542.2	1025.3
6	2	0.2	0.0	-2416.0	-1045.2
	3	0.2	0.0	-2530.5	1160.2
7	2	0.2	0.0	-2938.8	-1106.0
	3	0.3	0.0	-3901.1	1928.9
8	2	0.2	0.0	-2496.7	-897.7
	3	0.2	0.0	-3518.0	1771.0
9	2	0.2	0.0	-3103.7	-1080.1
	3	0.3	0.0	-4547.5	2314.8
10	2	0.2	0.0	-2234.1	-674.2
	3	0.2	0.0	-3775.7	1992.4
11	2	0.2	0.0	-3397.3	-1253.7
	3	0.3	0.0	-4630.6	2308.3
12	2	0.2	0.0	-3217.3	-1165.0
	3	0.3	0.0	-4493.6	2256.4
13	2	0.2	0.0	-2657.2	-1116.2
	3	0.2	0.0	-2962.6	1377.4
14	2	0.2	0.0	-3164.8	-1120.3
	3	0.3	0.0	-4545.2	2300.7
15	2	0.2	0.0	-2331.9	-923.6
	3	0.2	0.0	-2871.5	1385.1
16	2	0.2	0.0	-3117.0	-1500.2

Comb.	Nodo	Presione [kg/cm²]	Mt [kgm]	Taglio [kg]	MFlet. [kgm]
	3	0.2	0.0	-2539.5	1014.2
17	2	0.2	0.0	-2409.5	-1041.4
	3	0.2	0.0	-2526.8	1160.5
1	3	0.4	0.0	-5118.5	-1530.6
	4	0.6	0.0	-8736.5	4623.4
2	3	0.3	0.0	-4553.9	-1329.2
	4	0.5	0.0	-7931.3	4216.4
3	3	0.4	0.0	-6088.9	-2112.0
	4	0.6	0.0	-8974.8	4579.0
4	3	0.3	0.0	-4791.5	-1155.8
	4	0.6	0.0	-9527.8	5204.5
5	3	0.2	0.0	-2398.8	-546.2
	4	0.3	0.0	-5009.8	2756.8
6	3	0.2	0.0	-2305.4	-468.6
	4	0.3	0.0	-5289.7	2946.7
7	3	0.3	0.0	-3639.1	-1032.7
	4	0.4	0.0	-6481.9	3462.8
8	3	0.2	0.0	-3262.7	-898.4
	4	0.4	0.0	-5945.1	3191.5
9	3	0.3	0.0	-4286.0	-1420.2
	4	0.4	0.0	-6640.8	3433.2
10	3	0.2	0.0	-3421.1	-782.8
	4	0.5	0.0	-7009.4	3850.2
11	3	0.3	0.0	-4373.3	-1427.6
	4	0.5	0.0	-6881.2	3571.4
12	3	0.3	0.0	-4238.1	-1382.0
	4	0.4	0.0	-6675.6	3465.6
13	3	0.2	0.0	-2723.0	-557.4
	4	0.4	0.0	-5899.0	3272.3
14	3	0.3	0.0	-4269.8	-1358.9
	4	0.5	0.0	-6888.4	3597.3
15	3	0.2	0.0	-2615.8	-510.9
	4	0.4	0.0	-5786.2	3221.1
16	3	0.2	0.0	-2404.2	-562.9
	4	0.3	0.0	-4952.9	2718.4
17	3	0.2	0.0	-2302.7	-478.6
	4	0.3	0.0	-5256.6	2924.4
1	4	0.6	0.0	-6593.6	2514.2
	5	2.1	0.0	-32971.0	20050.6
2	4	0.5	0.0	-5973.8	2303.9
	5	1.9	0.0	-29998.5	18248.1
3	4	0.6	0.0	-6934.8	2210.8
	5	2.1	0.0	-32574.0	19722.5
4	4	0.6	0.0	-7441.5	1746.8
	5	2.0	0.0	-31919.0	19192.7

Comb.	Nodo	Presione [kg/cm²]	Mt [kgm]	Taglio [kg]	MFlet. [kgm]
5	4	0.3	0.0	-3455.4	2361.9
	5	1.4	0.0	-22593.3	13939.7
6	4	0.3	0.0	-3753.0	1965.0
	5	1.4	0.0	-22096.1	13543.5
7	4	0.4	0.0	-4868.0	1913.7
	5	1.6	0.0	-24621.0	14984.2
8	4	0.4	0.0	-4454.8	1773.5
	5	1.4	0.0	-22639.3	13782.5
9	4	0.4	0.0	-5095.5	1711.4
	5	1.6	0.0	-24356.3	14765.4
10	4	0.5	0.0	-5433.3	1402.0
	5	1.5	0.0	-23919.7	14412.3
11	4	0.5	0.0	-5273.4	1781.6
	5	1.6	0.0	-25257.3	15313.8
12	4	0.4	0.0	-5115.9	1727.0
	5	1.6	0.0	-24496.7	14852.4
13	4	0.4	0.0	-4340.0	1924.6
	5	1.5	0.0	-23010.9	14047.5
14	4	0.5	0.0	-5311.6	1652.7
	5	1.6	0.0	-24752.7	14978.3
15	4	0.4	0.0	-4227.3	1975.8
	5	1.5	0.0	-22904.0	14001.3
16	4	0.3	0.0	-3398.4	2395.1
	5	1.4	0.0	-22596.1	13951.7
17	4	0.3	0.0	-3721.1	1964.6
	5	1.4	0.0	-22058.9	13523.2
1	5	2.1	0.0	-10740.9	-6877.5
	6	2.6	0.0	-13503.5	8649.5
2	5	1.9	0.0	-9771.5	-6256.5
	6	2.5	0.0	-12750.6	8167.4
3	5	2.1	0.0	-10621.6	-6800.9
	6	2.7	0.0	-13728.1	8793.5
4	5	2.0	0.0	-10424.1	-6674.5
	6	2.6	0.0	-13293.1	8514.8
5	5	1.4	0.0	-7338.1	-4698.6
	6	1.8	0.0	-9365.8	5999.2
6	5	1.4	0.0	-7185.6	-4600.9
	6	1.8	0.0	-9227.4	5910.6
7	5	1.6	0.0	-8019.3	-5134.8
	6	2.0	0.0	-10155.4	6504.9
8	5	1.4	0.0	-7373.0	-4720.8
	6	1.9	0.0	-9653.5	6183.6
9	5	1.6	0.0	-7939.8	-5083.7
	6	2.0	0.0	-10305.1	6600.9
10	5	1.5	0.0	-7808.1	-4999.5
	6	2.0	0.0	-10015.2	6415.2

Comb.	Nodo	Presione [kg/cm²]	Mt [kgm]	Taglio [kg]	MFlet. [kgm]
11	5	1.6	0.0	-8233.4	-5271.8
	6	2.1	0.0	-10515.3	6735.5
12	5	1.6	0.0	-7985.3	-5112.9
	6	2.0	0.0	-10324.7	6613.4
13	5	1.5	0.0	-7489.6	-4795.6
	6	1.9	0.0	-9576.3	6134.1
14	5	1.6	0.0	-8072.3	-5168.6
	6	2.0	0.0	-10397.0	6659.7
15	5	1.5	0.0	-7452.6	-4771.9
	6	1.9	0.0	-9503.8	6087.6
16	5	1.4	0.0	-7338.0	-4698.5
	6	1.8	0.0	-9365.9	5999.2
17	5	1.4	0.0	-7173.3	-4593.0
	6	1.8	0.0	-9216.8	5903.8
1	9	-0.1	0.0	438.8	281.1
	10	-0.1	0.0	394.2	-252.4
2	9	-0.1	0.0	394.4	252.6
	10	-0.1	0.0	367.4	-235.3
3	9	-0.1	0.0	424.2	271.7
	10	-0.1	0.0	389.5	-249.4
4	9	-0.1	0.0	441.5	282.8
	10	-0.1	0.0	394.2	-252.4
5	9	-0.1	0.0	308.7	197.7
	10	-0.1	0.0	289.3	-185.3
6	9	-0.1	0.0	304.4	195.0
	10	-0.1	0.0	280.7	-179.8
7	9	-0.1	0.0	329.8	211.2
	10	-0.1	0.0	298.8	-191.3
8	9	-0.1	0.0	300.2	192.2
	10	-0.1	0.0	280.9	-179.9
9	9	-0.1	0.0	320.0	205.0
	10	-0.1	0.0	295.6	-189.3
10	9	-0.1	0.0	331.6	212.4
	10	-0.1	0.0	298.7	-191.3
11	9	-0.1	0.0	337.5	216.2
	10	-0.1	0.0	307.3	-196.8
12	9	-0.1	0.0	325.7	208.6
	10	-0.1	0.0	300.0	-192.1
13	9	-0.1	0.0	318.4	203.9
	10	-0.1	0.0	292.8	-187.5
14	9	-0.1	0.0	332.0	212.6
	10	-0.1	0.0	303.6	-194.4
15	9	-0.1	0.0	309.9	198.5
	10	-0.1	0.0	284.0	-181.9
16	9	-0.1	0.0	308.1	197.4
	10	-0.1	0.0	289.3	-185.2

Comb.	Nodo	Presione [kg/cm²]	Mt [kgm]	Taglio [kg]	MFlet. [kgm]
17	9	-0.1	0.0	303.6	194.4
	10	-0.1	0.0	280.0	-179.3
1	10	-0.1	0.0	49.7	37.6
	11	1.2	0.0	-6028.0	3860.6
2	10	-0.1	0.0	49.5	37.0
	11	1.1	0.0	-5562.0	3562.1
3	10	-0.1	0.0	52.3	39.1
	11	1.2	0.0	-5899.7	3778.4
4	10	-0.1	0.0	29.2	24.8
	11	1.2	0.0	-6385.8	4089.7
5	10	-0.1	0.0	17.3	15.6
	11	0.9	0.0	-4832.5	3094.9
6	10	-0.1	0.0	21.5	18.1
	11	0.9	0.0	-4558.2	2919.3
7	10	-0.1	0.0	33.4	25.8
	11	0.9	0.0	-4643.5	2973.9
8	10	-0.1	0.0	33.3	25.4
	11	0.8	0.0	-4332.8	2774.9
9	10	-0.1	0.0	35.2	26.9
	11	0.9	0.0	-4557.9	2919.1
10	10	-0.1	0.0	19.8	17.3
	11	1.0	0.0	-4882.1	3126.7
11	10	-0.1	0.0	27.7	22.4
	11	1.0	0.0	-4893.1	3133.7
12	10	-0.1	0.0	28.5	22.8
	11	0.9	0.0	-4752.3	3043.6
13	10	-0.1	0.0	15.0	14.2
	11	0.9	0.0	-4861.4	3113.4
14	10	-0.1	0.0	25.8	21.1
	11	0.9	0.0	-4862.2	3113.9
15	10	-0.1	0.0	31.5	24.4
	11	0.9	0.0	-4418.4	2829.7
16	10	-0.1	0.0	17.7	15.8
	11	0.9	0.0	-4830.3	3093.5
17	10	-0.1	0.0	22.3	18.6
	11	0.9	0.0	-4534.1	2903.8
1	13	0.7	0.0	-3339.0	-2136.8
	14	1.9	0.0	-9683.8	6205.5
2	13	0.6	0.0	-2947.9	-1886.4
	14	1.7	0.0	-8627.9	5528.9
3	13	0.6	0.0	-3193.8	-2043.9
	14	1.8	0.0	-9209.5	5901.6
4	13	0.7	0.0	-3333.8	-2133.4
	14	1.9	0.0	-9986.0	6399.2
5	13	0.4	0.0	-2288.4	-1464.3

Comb.	Nodo	Presione [kg/cm²]	Mt [kgm]	Taglio [kg]	MFlet. [kgm]
	14	1.4	0.0	-6967.8	4465.1
6	13	0.4	0.0	-2251.4	-1440.6
	14	1.3	0.0	-6891.1	4416.0
7	13	0.5	0.0	-2489.4	-1593.1
	14	1.4	0.0	-7311.0	4685.0
8	13	0.4	0.0	-2228.6	-1426.1
	14	1.3	0.0	-6607.0	4233.9
9	13	0.5	0.0	-2392.6	-1531.1
	14	1.4	0.0	-6994.8	4482.4
10	13	0.5	0.0	-2485.9	-1590.8
	14	1.5	0.0	-7512.4	4814.1
11	13	0.5	0.0	-2526.1	-1616.5
	14	1.5	0.0	-7467.1	4785.1
12	13	0.5	0.0	-2424.3	-1551.4
	14	1.4	0.0	-7180.0	4601.1
13	13	0.5	0.0	-2348.9	-1503.0
	14	1.4	0.0	-7220.8	4627.2
14	13	0.5	0.0	-2475.8	-1584.3
	14	1.4	0.0	-7361.1	4717.1
15	13	0.5	0.0	-2325.4	-1488.1
	14	1.4	0.0	-6923.2	4436.5
16	13	0.4	0.0	-2285.7	-1462.6
	14	1.4	0.0	-6950.1	4453.8
17	13	0.4	0.0	-2245.7	-1437.0
	14	1.3	0.0	-6867.6	4400.9
1	14	1.9	0.0	-9678.0	-6199.5
	15	1.3	0.0	-6865.7	4395.6
2	14	1.7	0.0	-8622.5	-5523.3
	15	1.2	0.0	-6333.3	4054.9
3	14	1.8	0.0	-9204.0	-5895.8
	15	1.3	0.0	-6579.7	4212.5
4	14	1.9	0.0	-9980.3	-6393.3
	15	1.3	0.0	-6742.7	4316.6
5	14	1.4	0.0	-6963.4	-4460.5
	15	1.0	0.0	-5134.6	3287.5
6	14	1.3	0.0	-6886.9	-4411.6
	15	1.0	0.0	-4955.5	3172.7
7	14	1.4	0.0	-7306.6	-4680.4
	15	1.0	0.0	-5200.7	3329.7
8	14	1.3	0.0	-6602.9	-4229.6
	15	0.9	0.0	-4845.8	3102.5
9	14	1.4	0.0	-6990.6	-4478.0
	15	1.0	0.0	-5010.0	3207.6
10	14	1.5	0.0	-7508.1	-4809.6
	15	1.0	0.0	-5118.7	3277.0
11	14	1.5	0.0	-7462.7	-4780.5

Comb.	Nodo	Presione [kg/cm²]	Mt [kgm]	Taglio [kg]	MFlet. [kgm]
	15	1.0	0.0	-5221.7	3343.1
12	14	1.4	0.0	-7175.7	-4596.6
	15	1.0	0.0	-5079.9	3252.3
13	14	1.4	0.0	-7216.4	-4622.7
	15	1.0	0.0	-5113.5	3273.8
14	14	1.4	0.0	-7356.7	-4712.6
	15	1.0	0.0	-5134.5	3287.2
15	14	1.4	0.0	-6918.9	-4432.1
	15	1.0	0.0	-5036.4	3224.6
16	14	1.4	0.0	-6945.8	-4449.2
	15	1.0	0.0	-5137.1	3289.0
17	14	1.3	0.0	-6863.4	-4396.5
	15	1.0	0.0	-4943.9	3165.3
1	15	1.3	0.0	-6860.4	-4393.8
	16	-0.1	0.0	135.1	-93.0
2	15	1.2	0.0	-6326.9	-4052.1
	16	-0.1	0.0	146.1	-99.6
3	15	1.3	0.0	-6573.6	-4210.1
	16	-0.1	0.0	144.9	-99.1
4	15	1.3	0.0	-6739.6	-4316.4
	16	-0.1	0.0	102.6	-72.2
5	15	1.0	0.0	-5130.0	-3285.5
	16	-0.1	0.0	112.6	-77.1
6	15	1.0	0.0	-4951.5	-3171.2
	16	-0.1	0.0	104.8	-72.0
7	15	1.0	0.0	-5196.6	-3328.2
	16	-0.1	0.0	103.5	-71.2
8	15	0.9	0.0	-4840.9	-3100.4
	16	-0.1	0.0	110.9	-75.6
9	15	1.0	0.0	-5005.4	-3205.7
	16	-0.1	0.0	110.1	-75.3
10	15	1.0	0.0	-5116.1	-3276.6
	16	-0.1	0.0	81.9	-57.3
11	15	1.0	0.0	-5217.8	-3341.7
	16	-0.1	0.0	102.9	-70.9
12	15	1.0	0.0	-5075.6	-3250.7
	16	-0.1	0.0	106.1	-72.8
13	15	1.0	0.0	-5109.8	-3272.6
	16	-0.1	0.0	97.4	-67.3
14	15	1.0	0.0	-5130.7	-3285.9
	16	-0.1	0.0	100.3	-69.2
15	15	1.0	0.0	-5032.1	-3222.8
	16	-0.1	0.0	104.3	-71.6
16	15	1.0	0.0	-5132.4	-3287.0
	16	-0.1	0.0	114.0	-78.0
17	15	1.0	0.0	-4939.8	-3163.7

Comb.	Nodo	Presione [kg/cm²]	Mt [kgm]	Taglio [kg]	MFlet. [kgm]
	16	-0.1	0.0	105.6	-72.5
1	18	1.1	0.0	-5498.9	-3519.1
	19	3.1	0.0	-15652.9	10030.6
2	18	1.1	0.0	-5796.8	-3710.0
	19	3.1	0.0	-15903.9	10191.3
3	18	1.1	0.0	-5450.6	-3488.1
	19	3.1	0.0	-15891.4	10183.4
4	18	0.8	0.0	-4066.8	-2602.0
	19	2.6	0.0	-13560.2	8689.8
5	18	0.5	0.0	-2386.3	-1526.4
	19	1.7	0.0	-8907.5	5708.3
6	18	0.5	0.0	-2753.4	-1761.6
	19	1.9	0.0	-9528.1	6106.0
7	18	0.8	0.0	-3902.7	-2497.4
	19	2.2	0.0	-11480.6	7356.9
8	18	0.8	0.0	-4101.3	-2624.7
	19	2.3	0.0	-11647.9	7464.1
9	18	0.8	0.0	-3870.5	-2476.8
	19	2.3	0.0	-11639.5	7458.8
10	18	0.6	0.0	-2948.0	-1886.0
	19	2.0	0.0	-10085.4	6463.1
11	18	0.6	0.0	-3094.0	-1979.4
	19	2.1	0.0	-10557.8	6765.7
12	18	0.6	0.0	-3246.5	-2077.1
	19	2.1	0.0	-10733.7	6878.5
13	18	0.5	0.0	-2528.6	-1617.5
	19	1.8	0.0	-9232.6	5916.6
14	18	0.6	0.0	-3015.8	-1929.4
	19	2.0	0.0	-10421.2	6678.3
15	18	0.8	0.0	-4133.5	-2645.4
	19	2.2	0.0	-11488.9	7362.2
16	18	0.5	0.0	-2384.0	-1525.0
	19	1.7	0.0	-8903.9	5706.0
17	18	0.5	0.0	-2781.6	-1779.6
	19	1.9	0.0	-9573.9	6135.3
1	19	3.1	0.0	-15643.7	-10021.1
	20	2.1	0.0	-10957.9	7015.5
2	19	3.1	0.0	-15894.6	-10181.9
	20	2.1	0.0	-10996.4	7040.0
3	19	3.1	0.0	-15881.9	-10173.6
	20	2.2	0.0	-11205.8	7174.2
4	19	2.6	0.0	-13551.4	-8680.3
	20	2.0	0.0	-10413.0	6667.3
5	19	1.7	0.0	-8901.7	-5702.0
	20	1.3	0.0	-6806.5	4358.1

Comb.	Nodo	Presione [kg/cm²]	Mt [kgm]	Taglio [kg]	MFlet. [kgm]
6	19	1.9	0.0	-9522.0	-6099.3
	20	1.4	0.0	-7290.7	4668.1
7	19	2.2	0.0	-11473.7	-7349.8
	20	1.6	0.0	-8163.8	5226.7
8	19	2.3	0.0	-11641.0	-7457.0
	20	1.6	0.0	-8189.4	5243.1
9	19	2.3	0.0	-11632.5	-7451.5
	20	1.6	0.0	-8329.1	5332.6
10	19	2.0	0.0	-10078.8	-6455.9
	20	1.5	0.0	-7800.5	4994.6
11	19	2.1	0.0	-10551.1	-6758.6
	20	1.5	0.0	-7899.4	5057.8
12	19	2.1	0.0	-10727.0	-6871.3
	20	1.6	0.0	-7955.7	5093.7
13	19	1.8	0.0	-9226.6	-5910.0
	20	1.4	0.0	-7130.9	4565.8
14	19	2.0	0.0	-10414.6	-6671.1
	20	1.5	0.0	-7877.9	5044.0
15	19	2.2	0.0	-11482.2	-7355.3
	20	1.6	0.0	-8024.2	5137.2
16	19	1.7	0.0	-8898.1	-5699.7
	20	1.3	0.0	-6793.3	4349.6
17	19	1.9	0.0	-9567.8	-6128.7
	20	1.4	0.0	-7316.7	4684.8
1	20	2.1	0.0	-11659.1	-7455.3
	21	2.3	0.0	-12199.1	7801.6
2	20	2.1	0.0	-11706.6	-7485.5
	21	2.3	0.0	-12353.0	7900.1
3	20	2.2	0.0	-11914.2	-7618.5
	21	2.3	0.0	-12325.3	7882.2
4	20	2.0	0.0	-10981.0	-7023.2
	21	1.8	0.0	-9891.6	6324.5
5	20	1.3	0.0	-7331.5	-4686.7
	21	1.7	0.0	-9251.8	5918.2
6	20	1.4	0.0	-7788.0	-4979.4
	21	1.6	0.0	-8792.0	5623.4
7	20	1.6	0.0	-8691.9	-5557.8
	21	1.7	0.0	-9191.2	5878.1
8	20	1.6	0.0	-8723.6	-5578.0
	21	1.7	0.0	-9293.8	5943.8
9	20	1.6	0.0	-8862.0	-5666.7
	21	1.7	0.0	-9275.4	5931.8
10	20	1.5	0.0	-8239.8	-5269.8
	21	1.4	0.0	-7652.9	4893.3
11	20	1.5	0.0	-8408.1	-5376.4
	21	1.6	0.0	-8860.6	5666.6

Comb.	Nodo	Presione [kg/cm²]	Mt [kgm]	Taglio [kg]	MFlet. [kgm]
12	20	1.6	0.0	-8469.1	-5415.4
	21	1.7	0.0	-8940.9	5718.0
13	20	1.4	0.0	-7612.2	-4867.1
	21	1.6	0.0	-8389.8	5365.9
14	20	1.5	0.0	-8372.4	-5353.7
	21	1.6	0.0	-8612.7	5507.9
15	20	1.6	0.0	-8553.5	-5469.2
	21	1.7	0.0	-9209.7	5890.1
16	20	1.3	0.0	-7322.5	-4680.8
	21	1.7	0.0	-9331.2	5969.1
17	20	1.4	0.0	-7815.8	-4997.2
	21	1.6	0.0	-8833.5	5650.0
1	1	0.6	0.0	-6552.8	-3563.0
	7	0.4	0.0	-3926.2	1374.9
2	1	0.4	0.0	-4890.9	-2393.9
	7	0.4	0.0	-4398.0	1983.3
3	1	0.5	0.0	-6054.8	-3259.6
	7	0.4	0.0	-3808.5	1388.2
4	1	0.7	0.0	-7545.2	-4438.5
	7	0.3	0.0	-2664.1	372.3
5	1	0.4	0.0	-4424.3	-2550.1
	7	0.2	0.0	-1818.6	363.0
6	1	0.4	0.0	-4344.2	-2440.1
	7	0.2	0.0	-2175.8	623.5
7	1	0.4	0.0	-4873.2	-2666.9
	7	0.3	0.0	-2825.3	960.8
8	1	0.3	0.0	-3765.3	-1887.4
	7	0.3	0.0	-3139.8	1366.4
9	1	0.4	0.0	-4541.2	-2464.6
	7	0.3	0.0	-2746.8	969.7
10	1	0.5	0.0	-5534.8	-3250.5
	7	0.2	0.0	-1983.9	292.4
11	1	0.5	0.0	-5410.6	-3157.5
	7	0.2	0.0	-2050.5	358.3
12	1	0.4	0.0	-4944.7	-2820.7
	7	0.2	0.0	-2232.7	561.5
13	1	0.4	0.0	-4920.3	-2867.4
	7	0.2	0.0	-1886.7	340.2
14	1	0.5	0.0	-5298.6	-3093.3
	7	0.2	0.0	-2001.5	346.7
15	1	0.4	0.0	-4097.2	-2089.7
	7	0.3	0.0	-3218.3	1357.5
16	1	0.4	0.0	-4388.6	-2526.8
	7	0.2	0.0	-1815.8	365.2
17	1	0.4	0.0	-4302.6	-2408.2
	7	0.2	0.0	-2202.7	647.6

Comb.	Nodo	Presione [kg/cm²]	Mt [kgm]	Taglio [kg]	MFlet. [kgm]
1	7	0.4	0.0	-5812.7	-2507.8
	8	0.3	0.0	2898.2	-1998.1
2	7	0.4	0.0	-6971.1	-3059.5
	8	0.3	0.0	3779.5	-2501.4
3	7	0.4	0.0	-5655.2	-2442.3
	8	0.3	0.0	2834.1	-1948.9
4	7	0.3	0.0	-3463.5	-1438.5
	8	0.2	0.0	1401.1	-1077.8
5	7	0.2	0.0	-2210.0	-901.8
	8	0.1	0.0	800.0	-655.2
6	7	0.2	0.0	-2940.2	-1238.7
	8	0.2	0.0	1291.9	-950.4
7	7	0.3	0.0	-4121.9	-1771.9
	8	0.2	0.0	2017.5	-1403.9
8	7	0.3	0.0	-4894.2	-2139.7
	8	0.2	0.0	2605.0	-1739.4
9	7	0.3	0.0	-4016.9	-1728.2
	8	0.2	0.0	1974.7	-1371.1
10	7	0.2	0.0	-2555.8	-1059.0
	8	0.2	0.0	1019.4	-790.3
11	7	0.2	0.0	-2545.4	-1044.4
	8	0.2	0.0	954.9	-766.2
12	7	0.2	0.0	-2966.3	-1242.9
	8	0.2	0.0	1264.1	-945.3
13	7	0.2	0.0	-2309.8	-944.0
	8	0.2	0.0	844.8	-687.8
14	7	0.2	0.0	-2498.6	-1026.8
	8	0.2	0.0	947.0	-755.5
15	7	0.3	0.0	-4999.2	-2183.4
	8	0.2	0.0	2647.8	-1772.2
16	7	0.2	0.0	-2206.0	-900.2
	8	0.1	0.0	798.5	-654.0
17	7	0.2	0.0	-2997.2	-1265.2
	8	0.2	0.0	1331.4	-973.9
1	8	0.3	0.0	-2898.2	-1368.9
	12	0.2	0.0	-1095.1	-113.9
2	8	0.3	0.0	-3779.5	-2177.2
	12	0.2	0.0	114.8	-1025.5
3	8	0.3	0.0	-2834.1	-1357.2
	12	0.2	0.0	-997.9	-152.9
4	8	0.2	0.0	-1401.1	-241.3
	12	0.2	0.0	-2184.6	885.6
5	8	0.1	0.0	-800.0	12.2
	12	0.2	0.0	-1840.5	841.9
6	8	0.2	0.0	-1291.9	-385.3

Comb.	Nodo	Presione [kg/cm²]	Mt [kgm]	Taglio [kg]	MFlet. [kgm]
	12	0.2	0.0	-1373.9	452.4
7	8	0.2	0.0	-2017.5	-904.3
	12	0.2	0.0	-953.7	29.4
8	8	0.2	0.0	-2605.0	-1443.2
	12	0.1	0.0	-147.1	-578.2
9	8	0.2	0.0	-1974.7	-896.5
	12	0.2	0.0	-888.9	3.5
10	8	0.2	0.0	-1019.4	-152.6
	12	0.2	0.0	-1680.0	695.8
11	8	0.2	0.0	-954.9	-45.5
	12	0.2	0.0	-1957.0	869.6
12	8	0.2	0.0	-1264.1	-319.7
	12	0.2	0.0	-1569.5	570.8
13	8	0.2	0.0	-844.8	-3.0
	12	0.2	0.0	-1878.0	852.7
14	8	0.2	0.0	-947.0	-61.5
	12	0.2	0.0	-1876.1	825.6
15	8	0.2	0.0	-2647.8	-1451.0
	12	0.1	0.0	-211.9	-552.3
16	8	0.1	0.0	-798.5	12.3
	12	0.2	0.0	-1838.1	840.8
17	8	0.2	0.0	-1331.4	-418.4
	12	0.2	0.0	-1332.3	418.6
1	12	0.2	0.0	-2274.6	-178.0
	13	0.7	0.0	-7215.1	4293.8
2	12	0.2	0.0	-1571.7	128.9
	13	0.6	0.0	-6378.0	3875.0
3	12	0.2	0.0	-2158.4	-159.0
	13	0.6	0.0	-6901.6	4110.3
4	12	0.2	0.0	-2587.0	-384.8
	13	0.7	0.0	-7198.0	4226.1
5	12	0.2	0.0	-1932.2	-419.7
	13	0.4	0.0	-4937.8	2869.3
6	12	0.2	0.0	-1789.8	-303.7
	13	0.4	0.0	-4860.2	2845.1
7	12	0.2	0.0	-1756.7	-172.6
	13	0.5	0.0	-5378.1	3189.4
8	12	0.1	0.0	-1288.2	32.0
	13	0.4	0.0	-4820.0	2910.3
9	12	0.2	0.0	-1679.3	-160.0
	13	0.5	0.0	-5169.1	3067.1
10	12	0.2	0.0	-1965.0	-310.5
	13	0.5	0.0	-5366.6	3144.3
11	12	0.2	0.0	-2193.3	-444.4
	13	0.5	0.0	-5449.6	3157.1
12	12	0.2	0.0	-1980.0	-344.6

Comb.	Nodo	Presione [kg/cm²]	Mt [kgm]	Taglio [kg]	MFlet. [kgm]
	13	0.5	0.0	-5232.4	3054.1
13	12	0.2	0.0	-2073.7	-435.7
	13	0.5	0.0	-5066.7	2929.0
14	12	0.2	0.0	-2115.3	-413.1
	13	0.5	0.0	-5341.7	3100.9
15	12	0.1	0.0	-1365.6	19.3
	13	0.5	0.0	-5029.0	3032.6
16	12	0.2	0.0	-1921.7	-418.6
	13	0.4	0.0	-4932.2	2867.4
17	12	0.2	0.0	-1767.4	-292.7
	13	0.4	0.0	-4848.1	2841.2
1	13	0.7	0.0	-6579.6	-3000.0
	17	0.5	0.0	-5021.2	1639.9
2	13	0.6	0.0	-5756.1	-2550.7
	17	0.5	0.0	-4704.8	1633.3
3	13	0.6	0.0	-6269.7	-2825.5
	17	0.5	0.0	-4925.0	1652.0
4	13	0.7	0.0	-6688.9	-3217.3
	17	0.5	0.0	-4396.1	1216.3
5	13	0.4	0.0	-4683.1	-2322.7
	17	0.3	0.0	-2766.0	655.1
6	13	0.4	0.0	-4550.5	-2217.2
	17	0.3	0.0	-2872.9	750.9
7	13	0.5	0.0	-4925.7	-2274.3
	17	0.4	0.0	-3638.8	1151.2
8	13	0.4	0.0	-4376.7	-1974.8
	17	0.4	0.0	-3427.9	1146.8
9	13	0.5	0.0	-4719.1	-2158.0
	17	0.4	0.0	-3574.7	1159.2
10	13	0.5	0.0	-4998.6	-2419.2
	17	0.4	0.0	-3222.0	868.8
11	13	0.5	0.0	-5051.1	-2406.0
	17	0.4	0.0	-3419.4	981.9
12	13	0.5	0.0	-4831.2	-2278.6
	17	0.4	0.0	-3366.3	1000.1
13	13	0.5	0.0	-4748.2	-2332.7
	17	0.3	0.0	-2914.0	732.0
14	13	0.5	0.0	-4955.6	-2367.5
	17	0.4	0.0	-3325.1	944.5
15	13	0.5	0.0	-4583.2	-2091.1
	17	0.4	0.0	-3492.0	1138.7
16	13	0.4	0.0	-4681.8	-2322.4
	17	0.3	0.0	-2761.9	653.0
17	13	0.4	0.0	-4537.9	-2208.1
	17	0.3	0.0	-2877.6	756.7

Comb.	Nodo	Presione [kg/cm²]	Mt [kgm]	Taglio [kg]	MFlet. [kgm]
1	17	0.5	0.0	-4038.0	185.4
	18	1.1	0.0	-11655.1	6462.2
2	17	0.5	0.0	-3407.9	774.5
	18	1.1	0.0	-12451.0	7117.6
3	17	0.5	0.0	-3897.6	255.4
	18	1.1	0.0	-11573.2	6443.2
4	17	0.5	0.0	-4062.4	-596.8
	18	0.8	0.0	-8411.6	4392.4
5	17	0.3	0.0	-2704.8	-589.2
	18	0.5	0.0	-4868.3	2452.1
6	17	0.3	0.0	-2632.4	-331.3
	18	0.5	0.0	-5715.6	3012.2
7	17	0.4	0.0	-2995.4	43.2
	18	0.8	0.0	-8246.8	4539.7
8	17	0.4	0.0	-2575.4	435.9
	18	0.8	0.0	-8777.4	4976.7
9	17	0.4	0.0	-2901.9	89.9
	18	0.8	0.0	-8192.2	4527.1
10	17	0.4	0.0	-3011.7	-478.2
	18	0.6	0.0	-6084.5	3159.9
11	17	0.4	0.0	-3160.8	-501.9
	18	0.6	0.0	-6385.8	3316.4
12	17	0.4	0.0	-2992.0	-305.3
	18	0.6	0.0	-6763.4	3596.6
13	17	0.3	0.0	-2832.2	-580.0
	18	0.5	0.0	-5170.6	2620.8
14	17	0.4	0.0	-3079.3	-488.1
	18	0.6	0.0	-6224.8	3233.2
15	17	0.4	0.0	-2669.0	389.3
	18	0.8	0.0	-8832.0	4989.3
16	17	0.3	0.0	-2698.8	-588.3
	18	0.5	0.0	-4863.8	2450.1
17	17	0.3	0.0	-2620.5	-308.9
	18	0.5	0.0	-5781.4	3056.5
1	5	2.1	0.0	-10752.3	-6886.6
	9	-0.1	0.0	-105.8	99.6
2	5	1.9	0.0	-9782.5	-6265.5
	9	-0.1	0.0	-101.1	93.7
3	5	2.1	0.0	-10633.7	-6810.6
	9	-0.1	0.0	-114.4	104.8
4	5	2.0	0.0	-10434.5	-6683.0
	9	-0.1	0.0	-87.0	86.6
5	5	1.4	0.0	-7345.4	-4704.5
	9	-0.1	0.0	-62.4	61.8
6	5	1.4	0.0	-7192.8	-4606.8
	9	-0.1	0.0	-60.1	60.1

Comb.	Nodo	Presione [kg/cm²]	Mt [kgm]	Taglio [kg]	MFlet. [kgm]
7	5	1.6	0.0	-8027.7	-5141.6
	9	-0.1	0.0	-76.8	73.0
8	5	1.4	0.0	-7381.2	-4727.5
	9	-0.1	0.0	-73.7	69.1
9	5	1.6	0.0	-7948.7	-5091.0
	9	-0.1	0.0	-82.6	76.4
10	5	1.5	0.0	-7815.9	-5005.9
	9	-0.1	0.0	-64.3	64.3
11	5	1.6	0.0	-8242.2	-5278.9
	9	-0.1	0.0	-79.9	75.6
12	5	1.6	0.0	-7994.1	-5120.0
	9	-0.1	0.0	-79.2	74.4
13	5	1.5	0.0	-7497.1	-4801.7
	9	-0.1	0.0	-61.3	61.5
14	5	1.6	0.0	-8081.0	-5175.7
	9	-0.1	0.0	-77.3	73.4
15	5	1.5	0.0	-7460.3	-4778.1
	9	-0.1	0.0	-68.0	65.6
16	5	1.4	0.0	-7345.3	-4704.4
	9	-0.1	0.0	-62.8	62.0
17	5	1.4	0.0	-7180.5	-4598.9
	9	-0.1	0.0	-60.2	60.1
1	9	-0.1	0.0	-333.0	632.8
	14	1.9	0.0	-9687.4	6232.5
2	9	-0.1	0.0	-293.3	566.0
	14	1.7	0.0	-8630.8	5553.1
3	9	-0.1	0.0	-309.8	606.2
	14	1.8	0.0	-9212.4	5927.5
4	9	-0.1	0.0	-354.5	645.5
	14	1.9	0.0	-9990.6	6426.6
5	9	-0.1	0.0	-246.6	450.8
	14	1.4	0.0	-6970.9	4484.2
6	9	-0.1	0.0	-244.8	445.3
	14	1.3	0.0	-6894.3	4434.9
7	9	-0.1	0.0	-252.9	476.8
	14	1.4	0.0	-7313.8	4705.3
8	9	-0.1	0.0	-226.4	432.2
	14	1.3	0.0	-6609.4	4252.3
9	9	-0.1	0.0	-237.5	459.1
	14	1.4	0.0	-6997.2	4502.0
10	9	-0.1	0.0	-267.3	485.2
	14	1.5	0.0	-7515.9	4834.7
11	9	-0.1	0.0	-257.6	487.4
	14	1.5	0.0	-7470.0	4805.8
12	9	-0.1	0.0	-246.5	469.4
	14	1.4	0.0	-7182.6	4621.1

Comb.	Nodo	Presione [kg/cm²]	Mt [kgm]	Taglio [kg]	MFlet. [kgm]
13	9	-0.1	0.0	-257.1	466.2
	14	1.4	0.0	-7224.1	4647.0
14	9	-0.1	0.0	-254.7	480.0
	14	1.4	0.0	-7363.9	4737.6
15	9	-0.1	0.0	-241.9	449.9
	14	1.4	0.0	-6926.1	4455.7
16	9	-0.1	0.0	-245.7	449.8
	14	1.4	0.0	-6953.2	4472.9
17	9	-0.1	0.0	-243.8	443.9
	14	1.3	0.0	-6870.8	4419.7
1	14	1.9	0.0	-10674.3	-6769.4
	19	3.1	0.0	-16291.5	10390.1
2	14	1.7	0.0	-9631.0	-6100.4
	19	3.1	0.0	-16478.0	10513.8
3	14	1.8	0.0	-10213.5	-6473.4
	19	3.1	0.0	-16501.3	10526.3
4	14	1.9	0.0	-10848.3	-6889.4
	19	2.6	0.0	-14211.7	9057.4
5	14	1.4	0.0	-7539.8	-4790.1
	19	1.7	0.0	-9364.1	5966.1
6	14	1.3	0.0	-7496.5	-4760.1
	19	1.9	0.0	-9979.8	6360.7
7	14	1.4	0.0	-8038.0	-5098.8
	19	2.2	0.0	-11961.8	7627.9
8	14	1.3	0.0	-7342.5	-4652.8
	19	2.3	0.0	-12086.1	7710.4
9	14	1.4	0.0	-7730.8	-4901.5
	19	2.3	0.0	-12101.6	7718.8
10	14	1.5	0.0	-8154.0	-5178.8
	19	2.0	0.0	-10575.3	6739.5
11	14	1.5	0.0	-8137.7	-5166.4
	19	2.1	0.0	-11046.1	7041.1
12	14	1.4	0.0	-7860.6	-4988.3
	19	2.1	0.0	-11204.8	7143.9
13	14	1.4	0.0	-7809.0	-4961.4
	19	1.8	0.0	-9702.2	6181.7
14	14	1.4	0.0	-8022.9	-5093.5
	19	2.0	0.0	-10902.7	6949.7
15	14	1.4	0.0	-7649.7	-4850.1
	19	2.2	0.0	-11946.2	7619.6
16	14	1.4	0.0	-7522.4	-4779.0
	19	1.7	0.0	-9359.7	5963.3
17	14	1.3	0.0	-7475.9	-4746.8
	19	1.9	0.0	-10024.3	6389.3
1	6	2.6	0.0	-13520.4	-8660.0

Comb.	Nodo	Presione [kg/cm²]	Mt [kgm]	Taglio [kg]	MFlet. [kgm]
	10	-0.1	0.0	-290.6	226.2
2	6	2.5	0.0	-12766.6	-8177.1
	10	-0.1	0.0	-279.3	216.7
3	6	2.7	0.0	-13745.6	-8804.2
	10	-0.1	0.0	-306.7	237.2
4	6	2.6	0.0	-13309.4	-8524.8
	10	-0.1	0.0	-279.9	218.7
5	6	1.8	0.0	-9376.7	-6005.8
	10	-0.1	0.0	-183.8	145.4
6	6	1.8	0.0	-9238.3	-5917.2
	10	-0.1	0.0	-187.3	147.4
7	6	2.0	0.0	-10168.0	-6512.7
	10	-0.1	0.0	-216.2	168.6
8	6	1.9	0.0	-9665.4	-6190.8
	10	-0.1	0.0	-208.7	162.3
9	6	2.0	0.0	-10318.1	-6608.9
	10	-0.1	0.0	-227.0	175.9
10	6	2.0	0.0	-10027.3	-6422.6
	10	-0.1	0.0	-209.1	163.6
11	6	2.1	0.0	-10528.4	-6743.5
	10	-0.1	0.0	-226.0	175.9
12	6	2.0	0.0	-10337.5	-6621.3
	10	-0.1	0.0	-223.5	173.8
13	6	1.9	0.0	-9587.6	-6140.9
	10	-0.1	0.0	-192.8	151.9
14	6	2.0	0.0	-10409.9	-6667.6
	10	-0.1	0.0	-223.6	174.1
15	6	1.9	0.0	-9515.3	-6094.6
	10	-0.1	0.0	-197.9	155.0
16	6	1.8	0.0	-9376.7	-6005.8
	10	-0.1	0.0	-183.7	145.3
17	6	1.8	0.0	-9227.7	-5910.4
	10	-0.1	0.0	-187.4	147.4
1	10	-0.1	0.0	-153.2	502.3
	15	1.3	0.0	-6869.9	4427.1
2	10	-0.1	0.0	-137.6	465.8
	15	1.2	0.0	-6336.6	4083.8
3	10	-0.1	0.0	-135.1	489.0
	15	1.3	0.0	-6582.7	4243.0
4	10	-0.1	0.0	-143.4	497.9
	15	1.3	0.0	-6746.7	4348.3
5	10	-0.1	0.0	-120.8	372.0
	15	1.0	0.0	-5138.1	3310.6
6	10	-0.1	0.0	-114.5	360.1
	15	1.0	0.0	-4958.8	3195.2
7	10	-0.1	0.0	-115.9	380.6

Comb.	Nodo	Presione [kg/cm²]	Mt [kgm]	Taglio [kg]	MFlet. [kgm]
	15	1.0	0.0	-5203.8	3353.5
8	10	-0.1	0.0	-105.5	356.3
	15	0.9	0.0	-4848.3	3124.6
9	10	-0.1	0.0	-103.8	371.7
	15	1.0	0.0	-5012.4	3230.8
10	10	-0.1	0.0	-109.4	377.7
	15	1.0	0.0	-5121.7	3300.9
11	10	-0.1	0.0	-109.0	386.9
	15	1.0	0.0	-5224.4	3367.4
12	10	-0.1	0.0	-105.0	377.1
	15	1.0	0.0	-5082.3	3275.9
13	10	-0.1	0.0	-114.9	373.6
	15	1.0	0.0	-5116.7	3297.3
14	10	-0.1	0.0	-105.7	381.4
	15	1.0	0.0	-5137.0	3311.2
15	10	-0.1	0.0	-117.6	365.2
	15	1.0	0.0	-5039.8	3247.3
16	10	-0.1	0.0	-121.1	372.0
	15	1.0	0.0	-5140.5	3312.1
17	10	-0.1	0.0	-114.3	359.2
	15	1.0	0.0	-4947.2	3187.7
1	15	1.3	0.0	-7568.4	-4800.2
	20	2.1	0.0	-11424.1	7285.5
2	15	1.2	0.0	-7036.1	-4459.3
	20	2.1	0.0	-11430.0	7291.5
3	15	1.3	0.0	-7296.5	-4625.1
	20	2.2	0.0	-11655.2	7434.6
4	15	1.3	0.0	-7411.7	-4702.1
	20	2.0	0.0	-10868.4	6930.2
5	15	1.0	0.0	-5574.9	-3541.0
	20	1.3	0.0	-7148.9	4555.6
6	15	1.0	0.0	-5424.4	-3442.7
	20	1.4	0.0	-7624.0	4860.5
7	15	1.0	0.0	-5724.5	-3631.3
	20	1.6	0.0	-8516.2	5430.7
8	15	0.9	0.0	-5369.6	-3404.0
	20	1.6	0.0	-8520.2	5434.7
9	15	1.0	0.0	-5543.3	-3514.5
	20	1.6	0.0	-8670.3	5530.2
10	15	1.0	0.0	-5620.0	-3565.9
	20	1.5	0.0	-8145.8	5193.9
11	15	1.0	0.0	-5729.4	-3635.5
	20	1.5	0.0	-8251.7	5261.3
12	15	1.0	0.0	-5590.4	-3546.3
	20	1.6	0.0	-8299.5	5292.5
13	15	1.0	0.0	-5573.3	-3538.7

Comb.	Nodo	Presione [kg/cm²]	Mt [kgm]	Taglio [kg]	MFlet. [kgm]
	20	1.4	0.0	-7473.3	4763.4
14	15	1.0	0.0	-5640.5	-3578.7
	20	1.5	0.0	-8224.7	5244.3
15	15	1.0	0.0	-5550.9	-3520.7
	20	1.6	0.0	-8366.1	5335.3
16	15	1.0	0.0	-5576.6	-3542.2
	20	1.3	0.0	-7135.8	4547.3
17	15	1.0	0.0	-5414.4	-3436.2
	20	1.4	0.0	-7649.4	4876.9
1	11	1.2	0.0	-6017.9	-3893.9
	16	-0.1	0.0	47.3	-557.4
2	11	1.1	0.0	-5551.2	-3593.8
	16	-0.1	0.0	65.1	-528.0
3	11	1.2	0.0	-5889.6	-3811.4
	16	-0.1	0.0	51.0	-548.5
4	11	1.2	0.0	-6379.4	-4121.7
	16	-0.1	0.0	-20.7	-545.1
5	11	0.9	0.0	-4826.1	-3119.3
	16	-0.1	0.0	26.4	-432.5
6	11	0.9	0.0	-4551.3	-2943.1
	16	-0.1	0.0	23.5	-411.1
7	11	0.9	0.0	-4635.9	-2999.2
	16	-0.1	0.0	30.9	-425.8
8	11	0.8	0.0	-4324.7	-2799.1
	16	-0.1	0.0	42.7	-406.2
9	11	0.9	0.0	-4550.4	-2944.2
	16	-0.1	0.0	33.3	-419.9
10	11	1.0	0.0	-4876.9	-3151.0
	16	-0.1	0.0	-14.5	-417.6
11	11	1.0	0.0	-4886.3	-3159.4
	16	-0.1	0.0	11.5	-435.2
12	11	0.9	0.0	-4745.3	-3068.8
	16	-0.1	0.0	17.9	-427.0
13	11	0.9	0.0	-4854.6	-3138.1
	16	-0.1	0.0	2.4	-426.5
14	11	0.9	0.0	-4855.7	-3139.2
	16	-0.1	0.0	6.4	-429.2
15	11	0.9	0.0	-4410.2	-2854.2
	16	-0.1	0.0	40.3	-412.1
16	11	0.9	0.0	-4823.9	-3117.8
	16	-0.1	0.0	28.5	-433.1
17	11	0.9	0.0	-4527.1	-2927.6
	16	-0.1	0.0	25.3	-409.9
1	16	-0.1	0.0	-182.4	-69.3
	21	2.3	0.0	-11540.8	7390.6

Comb.	Nodo	Presione [kg/cm²]	Mt [kgm]	Taglio [kg]	MFlet. [kgm]
2	16	-0.1	0.0	-211.2	-87.1
	21	2.3	0.0	-11693.7	7488.5
3	16	-0.1	0.0	-195.8	-77.5
	21	2.3	0.0	-11653.2	7462.6
4	16	-0.1	0.0	-81.9	-14.3
	21	1.8	0.0	-9266.5	5934.5
5	16	-0.1	0.0	-138.2	-52.2
	21	1.7	0.0	-8841.0	5661.7
6	16	-0.1	0.0	-125.7	-46.2
	21	1.6	0.0	-8362.9	5355.6
7	16	-0.1	0.0	-134.4	-50.3
	21	1.7	0.0	-8700.3	5571.6
8	16	-0.1	0.0	-153.6	-62.1
	21	1.7	0.0	-8802.3	5636.9
9	16	-0.1	0.0	-143.4	-55.7
	21	1.7	0.0	-8775.3	5619.6
10	16	-0.1	0.0	-67.4	-13.6
	21	1.4	0.0	-7184.2	4600.9
11	16	-0.1	0.0	-114.4	-38.8
	21	1.6	0.0	-8384.8	5369.6
12	16	-0.1	0.0	-124.0	-44.6
	21	1.7	0.0	-8462.2	5419.1
13	16	-0.1	0.0	-99.8	-31.2
	21	1.6	0.0	-7958.7	5096.8
14	16	-0.1	0.0	-106.8	-34.9
	21	1.6	0.0	-8138.5	5212.0
15	16	-0.1	0.0	-144.6	-56.7
	21	1.7	0.0	-8727.4	5588.9
16	16	-0.1	0.0	-141.6	-54.0
	21	1.7	0.0	-8921.3	5713.1
17	16	-0.1	0.0	-128.1	-47.6
	21	1.6	0.0	-8403.9	5381.8

2.4 Sollecitazioni nei plinti

Convenzioni adottate

L'elemento, con riferimento al piano **x-y**, risulta essere così disposto:

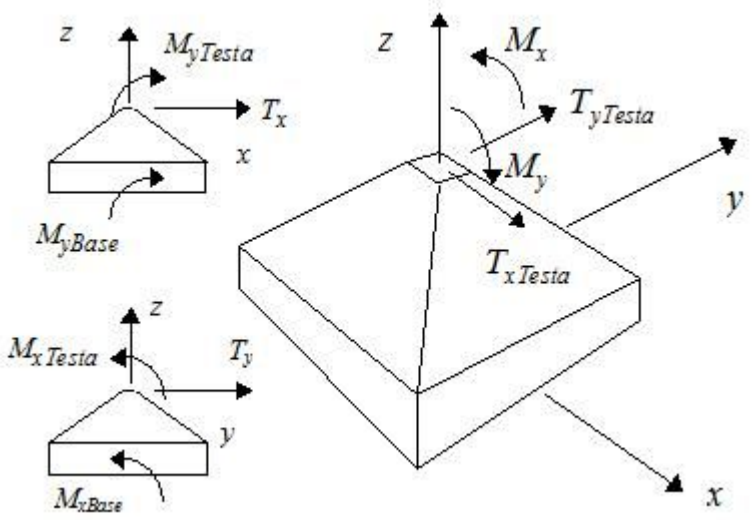

Per ogni plinto vengono riportati i valori dello Sforzo normale sulla testa del plinto i valori del taglio (dedotti a partire da quelli trasmessi al plinto dal pilastro sovrastante), i momenti alla base del plinto e le tensioni correlative indotte sul terreno. Per quanto riguarda i momenti alla base del plinto valgono, indicando con H_p l'altezza del plinto dalla quota di fondazione a quella di imposta del pilastro sovrastante:

$$M_{xBase} = M_{xTesta} + T_y \times H_{Plinto}$$

$$M_{yBase} = M_{yTesta} - T_x \times H_{Plinto}$$

La tensione sul terreno viene calcolata in pressoflessione deviata su una sezione d'impronta di forma rettangolare eventualmente parzializzata.

Nodo	Comb.	N [kg]	Tx [kg]	Ty [kg]	Mx [kgm]	My [kgm]	σ_{ter} [kg/cm²]	Rib.
1	1	-23784.4	-285.9	-6046.2	-4836.9	228.7	1.0	
	2	-17850.9	-507.2	-9793.3	-7834.6	405.7	1.1	
	3	-21989.1	-283.9	-6047.9	-4838.3	227.1	0.9	
	4	-27261.5	2799.7	-798.5	-638.8	-2239.8	0.9	
	5	-16004.4	-1922.7	-260.4	-208.3	1538.2	0.5	
	6	-15738.7	-899.2	-1880.9	-1504.8	719.4	0.6	
	7	-17681.7	-188.9	-4042.1	-3233.7	151.2	0.7	
	8	-13726.0	-336.5	-6540.2	-5232.2	269.2	0.8	
	9	-16484.8	-187.6	-4043.3	-3234.6	150.1	0.7	
	10	-19999.7	1868.1	-543.6	-434.9	-1494.5	0.6	
	11	-19558.4	28.9	-242.5	-194.0	-23.1	0.5	
	12	-17898.4	-44.3	-1497.5	-1198.0	35.5	0.5	
	13	-17787.5	20.6	-171.4	-137.1	-16.5	0.5	
	14	-19153.1	396.6	-298.2	-238.5	-317.3	0.5	
	15	-14922.9	-337.8	-6539.0	-5231.2	270.2	0.8	
	16	-15876.5	-2096.7	-274.9	-219.9	1677.4	0.5	
	17	-15591.1	-984.6	-2047.3	-1637.8	787.7	0.6	
5	1	-83882.0	-97.9	-3872.3	-3097.8	78.3	2.3	
	2	-76314.7	-249.7	-8278.4	-6622.7	199.8	2.4	

Nodo	Comb.	N [kg]	Tx [kg]	Ty [kg]	Mx [kgm]	My [kgm]	σ_{ter} [kg/cm²]	Rib.
	3	-82952.9	-99.5	-4071.0	-3256.8	79.6	2.3	
	4	-81409.0	3918.1	2145.2	1716.2	-3134.5	2.4	
	5	-57308.3	-1828.5	1376.4	1101.1	1462.8	1.6	
	6	-56118.3	-816.9	-491.1	-392.8	653.5	1.5	
	7	-62627.8	-57.5	-2398.1	-1918.5	46.0	1.7	
	8	-57583.0	-158.7	-5335.5	-4268.4	126.9	1.8	
	9	-62008.5	-58.5	-2530.6	-2024.5	46.8	1.7	
	10	-60979.2	2619.9	1613.6	1290.9	-2095.9	1.8	
	11	-64300.3	83.8	1678.9	1343.1	-67.0	1.7	
	12	-62364.1	34.3	232.0	185.6	-27.4	1.6	
	13	-58491.9	73.2	1637.4	1309.9	-58.6	1.6	
	14	-63043.3	590.0	1621.9	1297.5	-472.0	1.7	
	15	-58202.4	-157.6	-5203.0	-4162.4	126.1	1.8	
	16	-57307.2	-1998.1	1342.9	1074.3	1598.5	1.6	
	17	-56021.7	-900.2	-707.1	-565.7	720.1	1.5	
6	1	-73790.5	-213.7	-1373.3	-1098.6	171.0	2.8	
	2	-69674.7	-378.3	-2612.9	-2090.4	302.6	2.8	
	3	-75016.3	-218.7	-1496.7	-1197.3	175.0	2.8	
	4	-72640.3	3847.9	691.4	553.2	-3078.3	3.1	
	5	-51179.3	-1878.1	-534.1	-427.3	1502.5	2.1	
	6	-50423.0	-860.2	-1394.2	-1115.4	688.1	2.0	
	7	-55494.5	-140.1	-880.1	-704.1	112.1	2.1	
	8	-52750.7	-249.8	-1706.5	-1365.2	199.8	2.1	
	9	-56311.7	-143.4	-962.3	-769.9	114.7	2.1	
	10	-54727.7	2567.6	496.4	397.1	-2054.1	2.3	
	11	-57460.9	18.5	232.1	185.7	-14.8	2.1	
	12	-56418.6	-36.0	-176.1	-140.9	28.8	2.0	
	13	-52329.8	20.5	305.4	244.3	-16.4	1.9	
	14	-56814.0	527.5	264.5	211.6	-422.0	2.1	
	15	-51933.5	-246.5	-1624.3	-1299.4	197.2	2.0	
	16	-51179.4	-2048.1	-622.1	-497.7	1638.5	2.1	
	17	-50365.0	-945.1	-1596.2	-1276.9	756.0	2.1	
11	1	-32961.4	-76.0	-4158.3	-3326.7	60.8	1.5	
	2	-30414.5	-82.0	-6851.0	-5480.8	65.6	1.7	
	3	-32260.9	-72.6	-4154.1	-3323.3	58.0	1.5	
	4	-34910.9	1838.3	338.2	270.6	-1470.6	1.5	
	5	-26416.2	-1233.4	-1543.9	-1235.2	986.7	1.2	
	6	-24919.4	-539.9	-2895.2	-2316.1	431.9	1.2	
	7	-25389.4	-57.0	-2777.2	-2221.7	45.6	1.2	
	8	-23691.4	-60.9	-4572.3	-3657.9	48.7	1.2	
	9	-24922.4	-54.7	-2774.4	-2219.5	43.7	1.1	
	10	-26689.1	1219.2	220.5	176.4	-975.4	1.1	
	11	-26751.9	-47.2	-68.8	-55.0	37.7	1.0	
	12	-25982.7	-49.3	-967.8	-774.2	39.5	1.0	
	13	-26574.4	-48.9	-56.7	-45.3	39.1	1.0	

Nodo	Comb.	N [kg]	Tx [kg]	Ty [kg]	Mx [kgm]	My [kgm]	σ_{ter} [kg/cm²]	Rib.
	14	-26582.2	206.7	-9.2	-7.4	-165.4	1.0	
	15	-24158.4	-63.3	-4575.1	-3660.1	50.6	1.3	
	16	-26404.0	-1328.6	-1663.8	-1331.1	1062.9	1.2	
	17	-24787.4	-579.4	-3124.5	-2499.6	463.5	1.2	
13	1	-26050.7	40.4	-4177.4	-3341.9	-32.3	0.9	
	2	-22998.8	55.8	-6833.1	-5466.4	-44.6	1.0	
	3	-24917.6	55.8	-4189.7	-3351.7	-44.6	0.9	
	4	-26010.2	2087.9	-611.8	-489.5	-1670.3	0.8	
	5	-17853.8	-1587.0	-242.1	-193.7	1269.6	0.6	
	6	-17565.6	-178.1	-1458.4	-1166.7	142.5	0.5	
	7	-19422.0	25.6	-2804.9	-2243.9	-20.5	0.7	
	8	-17387.3	35.9	-4575.4	-3660.3	-28.7	0.7	
	9	-18666.6	35.9	-2813.1	-2250.5	-28.7	0.6	
	10	-19394.9	1390.6	-427.9	-342.3	-1112.5	0.6	
	11	-19708.1	18.0	-159.7	-127.8	-14.4	0.5	
	12	-18914.2	23.4	-1044.7	-835.7	-18.7	0.5	
	13	-18325.6	-1.6	-149.5	-119.6	1.3	0.5	
	14	-19315.7	294.4	-215.2	-172.1	-235.5	0.5	
	15	-18142.7	25.6	-4567.1	-3653.7	-20.5	0.7	
	16	-17832.8	-1719.5	-252.6	-202.1	1375.6	0.6	
	17	-17520.5	-193.5	-1578.2	-1262.5	154.8	0.5	
14	1	-75545.4	157.1	-4493.6	-3594.9	-125.7	2.2	
	2	-67308.1	190.7	-6838.0	-5470.4	-152.5	2.1	
	3	-71845.9	173.2	-4387.4	-3509.9	-138.6	2.1	
	4	-77903.0	3209.8	-883.1	-706.5	-2567.8	2.2	
	5	-54357.1	-1475.1	-810.9	-648.7	1180.1	1.5	
	6	-53759.2	-142.7	-2027.5	-1622.0	114.2	1.5	
	7	-57034.7	108.7	-3070.3	-2456.2	-87.0	1.6	
	8	-51543.1	131.1	-4633.2	-3706.5	-104.9	1.6	
	9	-54568.3	119.5	-2999.5	-2399.6	-95.6	1.6	
	10	-58606.4	2143.8	-663.2	-530.6	-1715.0	1.6	
	11	-58252.8	77.0	-594.0	-475.2	-61.6	1.5	
	12	-56012.9	89.2	-1382.2	-1105.8	-71.3	1.5	
	13	-56330.9	48.3	-628.5	-502.8	-38.6	1.4	
	14	-57425.6	491.7	-588.3	-470.6	-393.4	1.5	
	15	-54009.5	120.3	-4704.0	-3763.2	-96.2	1.6	
	16	-54219.5	-1601.9	-832.3	-665.8	1281.5	1.5	
	17	-53575.9	-159.1	-2167.1	-1733.7	127.3	1.5	
15	1	-53625.3	204.0	-4714.5	-3771.6	-163.2	1.6	
	2	-49464.8	267.2	-7026.1	-5620.9	-213.8	1.7	
	3	-51390.7	227.9	-4623.5	-3698.8	-182.4	1.6	
	4	-52667.9	3383.7	-705.2	-564.2	-2707.0	1.6	
	5	-40103.3	-1430.4	-1907.6	-1526.1	1144.3	1.2	
	6	-38705.3	-126.8	-2966.1	-2372.8	101.5	1.2	

Nodo	Comb.	N [kg]	Tx [kg]	Ty [kg]	Mx [kgm]	My [kgm]	σ_{ter} [kg/cm²]	Rib.
	7	-40620.4	139.4	-3227.9	-2582.3	-111.6	1.2	
	8	-37846.8	181.6	-4769.0	-3815.2	-145.3	1.2	
	9	-39130.7	155.4	-3167.2	-2533.8	-124.3	1.2	
	10	-39982.2	2259.3	-555.0	-444.0	-1807.4	1.2	
	11	-40785.7	83.4	-768.0	-614.4	-66.7	1.1	
	12	-39677.2	105.4	-1548.3	-1238.6	-84.3	1.1	
	13	-39939.9	46.4	-752.3	-601.8	-37.2	1.0	
	14	-40104.3	521.0	-705.5	-564.4	-416.8	1.1	
	15	-39336.5	165.6	-4829.6	-3863.7	-132.5	1.3	
	16	-40122.1	-1554.3	-2000.6	-1600.5	1243.5	1.2	
	17	-38614.6	-142.0	-3145.2	-2516.1	113.6	1.2	
18	1	-32175.9	206.3	-5153.1	-4122.5	-165.1	1.6	
	2	-33919.2	338.0	-8672.9	-6938.3	-270.4	2.1	
	3	-31893.7	212.2	-5161.0	-4128.8	-169.8	1.6	
	4	-23797.0	4656.7	-531.6	-425.2	-3725.4	1.2	
	5	-13963.3	-1669.5	-114.5	-91.6	1335.6	0.6	
	6	-16111.5	79.9	-1763.4	-1410.7	-63.9	0.7	
	7	-22836.0	140.4	-3440.0	-2752.0	-112.4	1.1	
	8	-23998.3	228.2	-5786.6	-4629.2	-182.6	1.4	
	9	-22647.9	144.3	-3445.3	-2756.2	-115.5	1.1	
	10	-17250.1	3107.3	-359.0	-287.2	-2485.9	0.9	
	11	-18104.3	17.0	43.7	35.0	-13.6	0.6	
	12	-18996.5	60.4	-1126.1	-900.9	-48.3	0.8	
	13	-14796.0	16.3	12.5	10.0	-13.0	0.5	
	14	-17646.9	636.2	-40.6	-32.5	-509.0	0.6	
	15	-24186.4	224.3	-5781.3	-4625.0	-179.4	1.4	
	16	-13950.1	-1814.5	-129.4	-103.5	1451.6	0.6	
	17	-16276.2	84.1	-1932.1	-1545.7	-67.3	0.8	
19	1	-91584.3	644.7	-6560.1	-5248.1	-515.7	3.8	
	2	-93052.6	901.7	-10471.9	-8377.5	-721.3	4.3	
	3	-92979.2	688.6	-6395.6	-5116.5	-550.9	3.8	
	4	-79339.7	4690.0	-612.9	-490.4	-3752.0	3.1	
	5	-52116.8	-1625.3	-744.2	-595.3	1300.2	1.9	
	6	-55748.3	170.7	-2679.0	-2143.2	-136.5	2.2	
	7	-67172.1	440.0	-4427.1	-3541.7	-352.0	2.7	
	8	-68151.0	611.3	-7035.0	-5628.0	-489.1	3.1	
	9	-68102.1	469.3	-4317.5	-3454.0	-375.4	2.8	
	10	-59009.1	3136.9	-462.4	-369.9	-2509.5	2.3	
	11	-61772.7	192.5	-348.7	-278.9	-154.0	2.1	
	12	-62802.3	280.3	-1659.0	-1327.2	-224.3	2.3	
	13	-54019.3	120.1	-450.6	-360.5	-96.1	1.9	
	14	-60973.9	785.5	-344.4	-275.5	-628.4	2.1	
	15	-67221.0	582.1	-7144.6	-5715.7	-465.6	3.0	
	16	-52095.8	-1768.3	-776.2	-621.0	1414.7	2.0	
	17	-56016.4	177.1	-2894.4	-2315.5	-141.7	2.2	

Nodo	Comb.	N [kg]	Tx [kg]	Ty [kg]	Mx [kgm]	My [kgm]	σ_{ter} [kg/cm²]	Rib.
20	1	-85589.0	-311.9	-1936.0	-1548.8	249.6	2.3	
	2	-85891.1	-268.1	-3390.4	-2712.3	214.5	2.4	
	3	-87524.6	-391.5	-1938.1	-1550.5	313.2	2.3	
	4	-81324.1	3528.2	632.7	506.2	-2822.6	2.3	
	5	-53158.2	-2076.7	-743.7	-594.9	1661.4	1.5	
	6	-56939.2	37.4	-1576.5	-1261.2	-29.9	1.5	
	7	-63763.9	-213.1	-1267.9	-1014.3	170.5	1.7	
	8	-63965.3	-183.9	-2237.5	-1790.0	147.1	1.7	
	9	-65054.3	-266.1	-1269.3	-1015.4	212.9	1.7	
	10	-60920.6	2347.0	444.6	355.6	-1877.6	1.7	
	11	-61695.6	-267.5	180.6	144.5	214.0	1.6	
	12	-62135.9	-257.6	-303.7	-242.9	206.1	1.6	
	13	-55691.2	-127.8	177.1	141.7	102.3	1.4	
	14	-61526.9	248.6	232.7	186.2	-198.9	1.6	
	15	-62674.9	-130.8	-2236.1	-1788.9	104.7	1.7	
	16	-53055.4	-2239.0	-830.3	-664.2	1791.2	1.5	
	17	-57142.7	47.6	-1759.5	-1407.6	-38.1	1.5	
21	1	-63032.3	-24.8	-2341.0	-1872.8	19.8	2.5	
	2	-63858.7	-15.3	-3960.5	-3168.4	12.3	2.6	
	3	-63642.3	-47.6	-2355.4	-1884.3	38.1	2.5	
	4	-50632.7	3328.3	465.8	372.7	-2662.7	2.3	
	5	-48287.6	-1719.1	-1032.0	-825.6	1375.3	2.0	
	6	-45678.9	140.4	-2070.9	-1656.7	-112.3	1.8	
	7	-47519.7	-11.3	-1550.0	-1240.0	9.1	1.8	
	8	-48070.6	-5.0	-2629.7	-2103.7	4.0	1.9	
	9	-47926.4	-26.5	-1559.6	-1247.6	21.2	1.8	
	10	-39253.3	2224.1	321.2	257.0	-1779.3	1.7	
	11	-45801.3	-24.6	60.2	48.2	19.6	1.6	
	12	-46221.0	-22.7	-479.6	-383.7	18.1	1.7	
	13	-43476.7	14.6	75.9	60.7	-11.6	1.6	
	14	-44457.6	423.1	110.6	88.4	-338.5	1.6	
	15	-47663.9	10.2	-2620.1	-2096.1	-8.2	1.9	
	16	-48725.5	-1863.2	-1133.0	-906.4	1490.6	2.1	
	17	-45902.0	149.0	-2278.8	-1823.1	-119.2	1.9	

3. VERIFICHE

3.1 Verifiche travi

Modalità di verifica

Le travi vengono progettate-verificate a flessione retta e taglio nel piano longitudinale della trave sulla base dell'inviluppo delle sollecitazioni, in conformità al *Decreto Legge del 26 Marzo 1980* e successivi aggiornamenti.

Viene comunque sempre predisposta l'armatura minima mentre gli sforzi di taglio vengono integralmente assorbiti dalle staffe.

Le operazioni di progetto-verifica vengono condotte, per ogni asta, in tre diverse sezioni e precisamente in corrispondenza dei fili esterni dei pilastri e della sezione in campata nella quale viene riscontrato il massimo momento positivo (negativo).

I momenti si intendono postivi se tendono le fibre di intradosso (inferiori).

Per quanto concerne il progetto e la verifica delle travi a taglio esse vengono condotte nel modo seguente:

- Si controlla se la trave necessita o meno di armatura aggiuntiva a taglio:
    1. Se non occorre armatura aggiuntiva a taglio si procede a disporre la staffatura minima di regolamento e la progettazione ha termine.
    2. Se occorre armatura aggiuntiva a taglio la staffatuta viene progettata andando a suddividere la trave, a seconda del caso, in uno, tre o cinque conci:
        - due tronchi in prossimità degli appoggi di lunghezza pari all'altezza della sezione;
        - due altri (eventuali) tronchi dall'ascissa precedente a quella in cui il taglio può essere assorbito con la sola staffatura minima da regolamento
        - un restante (eventuale) concio di chiusura centrale.
- In ogni caso l'armatura a taglio si intende simmetrica rispetto alla mezzeria della trave e viene progettata considerando, rispetto alla mezzeria, la zona della trave più sollecitata.

Per quanto concerne le verifiche a taglio esse vengono condotte suddividendo la trave in cinque conci:

due tronchi in prossimità degli appoggi di lunghezza pari all'altezza della sezione; due altri (eventuali) tronchi dall'ascissa precedente a quella in cui il taglio può essere assorbito con la sola staffatura minima da regolamento; il restante (eventuale) concio di chiusura centrale.

L'armatura a taglio si intende simmetrica rispetto alla mezzeria della trave e viene progettata considerando, rispetto alla mezzeria, la zona della trave più sollecitata.

Simbologia utilizzata:

Af Es.
Area di ferro all'estradosso

Af In.
Area di ferro all'intradosso

Sigb.Es.
Tensione del calcestruzzo estradosso

Sigb. In.
Tensione del calcestruzzo intradosso

Sigf. Es.

Tensione dell'acciaio estradosso

Sigf. In.

Tensione dell'acciaio intradosso

Travata: ***0 Travata 11 10 9***

Nodo	x [m]	A_{fe} [cm²]	A_{fi} [cm²]	q_T [kg/m]	M_{rif} [kgm]	M_{de} [kgm]	M_{re} [kgm]	x/d	M_{di} [kgm]	M_{ri} [kgm]	x/d	σ_{be} [kg/cm²]	σ_{bi} [kg/cm²]	σ_{fe} [kg/cm²]	σ_{fi} [kg/cm²]	w mm
Trave di fondazione Sez. 1 Rett. 40x30 [cm] Cordolo_fondazione																
11	0.40	4.62	6.16			0.0	4304.9	0.18	-3016.0	-5562.5	0.19					
					SLE Rare	0.0			-2236.5			52.0	0.0	332.0	1630.9	
					SLE Freq.	0.0			-2241.5			52.1	0.0	332.7	1634.6	OK
					SLE Q.P.	0.0			-2024.1			47.0	0.0	300.4	1476.0	OK
Camp.	2.70	4.62	6.16			739.7	4304.9	0.18	0.0	-5562.5	0.19					
					SLE Rare	534.2			0.0			0.0	13.6	514.3	70.0	
					SLE Freq.	534.4			0.0			0.0	13.6	514.5	70.1	OK
					SLE Q.P.	481.8			0.0			0.0	12.2	463.9	63.2	OK
10	5.00	9.24	10.78			39.1	8053.7	0.22	0.0	-9292.9	0.24					
					SLE Rare	26.9			0.0			0.0	0.5	13.3	3.4	
					SLE Freq.	22.8			0.0			0.0	0.4	11.3	2.9	OK
					SLE Q.P.	24.4			0.0			0.0	0.4	12.1	3.1	OK
Trave di fondazione Sez. 1 Rett. 40x30 [cm] Cordolo_fondazione																
10	0.00	9.24	10.78			252.4	8053.7	0.22	0.0	-9292.9	0.24					
					SLE Rare	191.3			0.0			0.0	3.4	95.0	24.4	
					SLE Freq.	196.8			0.0			0.0	3.5	97.7	25.1	OK
					SLE Q.P.	181.9			0.0			0.0	3.3	90.3	23.2	OK
Camp.	4.97	4.62	4.62			0.0	4302.7	0.17	-27.2	-4302.7	0.17					
					SLE Rare	0.0			-20.5			0.5	0.0	2.9	19.7	
					SLE Freq.	0.0			-21.0			0.5	0.0	2.9	20.2	OK
					SLE Q.P.	0.0			-19.4			0.5	0.0	2.7	18.6	OK
9	9.95	3.81	3.81			253.2	3638.9	0.16	0.0	-3638.9	0.16					
					SLE Rare	198.7			0.0			0.0	5.7	189.2	21.9	
					SLE Freq.	202.3			0.0			0.0	5.8	192.6	22.3	OK
					SLE Q.P.	185.7			0.0			0.0	5.3	176.8	20.4	OK

Da [m]	A [m]	Dx [m]	V_{Ed} [kg]	$V_{Rd,c}$ [kg]	V_{Rcd} [kg]	V_{Rd} [kg]	Staffe
Trave di fondazione 11 10 Sez. 1 Rett. 40x30 [cm] Cordolo_fondazione							
0.59	5.00	4.41	5397.9	5190.8	32647.7	7080.8	ø 10 2br. 20.0'
Trave di fondazione 10 9 Sez. 1 Rett. 40x30 [cm] Cordolo_fondazione							
0.00	9.95	9.95	424.9	4870.3	32647.7	7080.8	ø 10 2br. 20.0'

Travata: ***10 Travata 192 211***

Nodo	x [m]	A_{fe} [cm²]	A_{fi} [cm²]	q_T [kg/m]	M_{rif} [kgm]	M_{de} [kgm]	M_{re} [kgm]	x/d	M_{di} [kgm]	M_{ri} [kgm]	x/d	σ_{be} [kg/cm²]	σ_{bi} [kg/cm²]	σ_{fe} [kg/cm²]	σ_{fi} [kg/cm²]	w mm
Trave Sez. 4 a T 60x80x30x30 [cm] ***Tegoli*** **EC2 4.4.2.3. Fessurazione : tensione eccessiva barre di Intradosso**																
192	0.48	30.54	15.27			0.0	82493.9	0.23	-7873.8	-42927.8	0.07					
				SLE Rare		0.0			-1981.2			3.5	0.0	36.6	185.8	
				SLE Freq.		0.0			-1981.2			3.5	0.0	36.6	185.8	OK
				SLE Q.P.		0.0			-918.4			1.6	0.0	17.0	86.1	OK
Camp.	6.86	30.54	12.72	2222.7	26301.5	0.0	81423.8	0.27	-52603.1	-35930.8	0.07					
				SLE Rare		0.0			-35699.2			66.9	0.0	677.1	4000.9	
				SLE Freq.		0.0			-35699.2			66.9	0.0	677.1	4000.9	NON VERIFICATO
				SLE Q.P.		0.0			-16549.3			31.0	0.0	313.9	1854.7	NON VERIFICATO
211	13.24	30.54	15.27			0.0	82493.9	0.23	-7873.8	-42927.8	0.07					
				SLE Rare		0.0			-1981.2			3.5	0.0	36.6	185.8	
				SLE Freq.		0.0			-1981.2			3.5	0.0	36.6	185.8	OK
				SLE Q.P.		0.0			-918.4			1.6	0.0	17.0	86.1	OK

Da [m]	A [m]	Dx [m]	V_{Ed} [kg]	$V_{Rd,c}$ [kg]	V_{Rcd} [kg]	V_{Rd} [kg]	Staffe
Trave 192 211 Sez. 4 a T 60x80x30x30 [cm] Tegoli							
0.75	1.52	0.76	14847.2	10514.7	72309.5	33456.8	ø 10 2br. 12.5'

1.52	12.17	10.66	13039.1	9939.2	72309.5	16728.4	ø 10 2br. 25.0'
12.17	12.94	0.76	14847.2	10513.8	72309.5	33456.8	ø 10 2br. 12.5'

Travata: ***10 Travata 1 2 3 4 5 6***

Nodo	x [m]	A_{fe} [cm²]	A_{fi} [cm²]	q_T [kg/m]	M_{rif} [kgm]	M_{de} [kgm]	M_{re} [kgm]	x/d	M_{di} [kgm]	M_{ri} [kgm]	x/d	σ_{be} [kg/cm²]	σ_{bi} [kg/cm²]	σ_{fe} [kg/cm²]	σ_{fi} [kg/cm²]	w mm
Trave di fondazione Sez. 3 Rett. 120x30 [cm] Cordolo_fondazione-2																
1	0.40	12.32	12.32			0.0	11639.1	0.17	-4487.8	11639.1	0.17					
					SLE Rare	0.0			-3254.9			29.8	0.0	147.5	1166.2	
					SLE Freq.	0.0			-2873.7			26.3	0.0	130.2	1029.6	OK
					SLE Q.P.	0.0			-2267.4			20.8	0.0	102.7	812.4	OK
Camp.	1.57	12.32	12.32			1684.0	11639.1	0.17	0.0	11639.1	0.17					
					SLE Rare	1148.8			0.0			0.0	10.5	411.6	52.1	
					SLE Freq.	1221.4			0.0			0.0	11.2	437.6	55.3	OK
					SLE Q.P.	908.2			0.0			0.0	8.3	325.4	41.2	OK
2	2.74	19.58	24.63			848.1	17581.2	0.20	-901.8	21679.9	0.22					
					SLE Rare	369.9			-604.6			4.1	2.6	74.7	111.8	
					SLE Freq.	7.5			-533.0			3.6	0.1	22.4	98.5	OK
					SLE Q.P.	3.1			-170.9			1.2	0.0	7.2	31.6	OK
Trave di fondazione Sez. 3 Rett. 120x30 [cm] Cordolo_fondazione-2																
2	0.01	19.58	24.63			0.0	17581.2	0.20	-1597.4	21679.9	0.22					
					SLE Rare	0.0			-1090.7			7.3	0.0	45.4	201.6	
					SLE Freq.	0.0			-1236.0			8.3	0.0	51.4	228.5	OK
					SLE Q.P.	0.0			-911.5			6.1	0.0	37.9	168.5	OK
Camp.	1.38	12.32	12.32			1177.8	11639.1	0.17	0.0	11639.1	0.17					
					SLE Rare	822.6			0.0			0.0	7.5	294.7	37.3	
					SLE Freq.	863.1			0.0			0.0	7.9	309.2	39.1	OK
					SLE Q.P.	559.4			0.0			0.0	5.1	200.4	25.3	OK
3	2.74	19.47	24.63			0.0	17489.4	0.19	-3271.7	21679.9	0.22					
					SLE Rare	0.0			-2291.0			15.4	0.0	95.4	423.5	
					SLE Freq.	0.0			-2284.2			15.4	0.0	95.1	422.2	OK
					SLE Q.P.	0.0			-1370.1			9.2	0.0	57.1	253.3	OK
Trave di fondazione Sez. 3 Rett. 120x30 [cm] Cordolo_fondazione-2																
3	0.01	19.47	24.63			1.8	17489.4	0.19	-2080.2	21679.9	0.22					
					SLE Rare	0.0			-1397.9			9.4	0.0	58.1	258.4	

				SLE Freq.	0.0			-1404.8			9.5	0.0	58.4	259.7	OK
				SLE Q.P.	0.0			-497.3			3.4	0.0	20.7	91.9	OK
Camp.	1.38	12.32	12.32		1655.7	11639.1	0.17	0.0	-11639.1	0.17					
				SLE Rare	1175.8			0.0			0.0	10.8	421.3	53.3	
				SLE Freq.	1211.1			0.0			0.0	11.1	433.9	54.9	OK
				SLE Q.P.	904.1			0.0			0.0	8.3	323.9	41.0	OK
4	2.75	19.12	24.63		0.0	17205.8	0.19	-5154.6	-21680.1	0.22					
				SLE Rare	0.0			-3813.5			25.8	0.0	159.0	704.8	
				SLE Freq.	0.0			-3561.3			24.1	0.0	148.5	658.2	OK
				SLE Q.P.	0.0			-3190.8			21.6	0.0	133.1	589.7	OK
Trave di fondazione Sez. 3 Rett. 120x30 [cm] Cordolo_fondazione-2																
4	0.01	19.12	24.63		3292.6	17205.8	0.19	0.0	-21680.1	0.22					
				SLE Rare	1938.7			0.0			0.0	14.0	384.2	85.4	
				SLE Freq.	1946.9			0.0			0.0	14.0	385.8	85.7	OK
				SLE Q.P.	1997.5			0.0			0.0	14.4	395.9	88.0	OK
Camp.	1.18	12.32	12.32		5130.8	11639.1	0.17	0.0	-11639.1	0.17					
				SLE Rare	3507.5			0.0			0.0	32.1	1256.7	158.9	
				SLE Freq.	3621.9			0.0			0.0	33.2	1297.7	164.1	OK
				SLE Q.P.	3237.2			0.0			0.0	29.7	1159.9	146.7	OK
5	2.35	16.00	24.63		0.0	14670.5	0.18	-14092.9	-21681.2	0.22					
				SLE Rare	0.0			-10468.8			72.1	0.0	521.7	1933.7	
				SLE Freq.	0.0			-10682.1			73.6	0.0	532.3	1973.1	OK
				SLE Q.P.	0.0			-9800.4			67.5	0.0	488.4	1810.2	OK
Trave di fondazione Sez. 1 Rett. 40x30 [cm] Cordolo_fondazione																
5	0.40	13.92	24.63		0.0	11832.5	0.22	-5192.7	-20163.6	0.38					
				SLE Rare	0.0			-3810.4			47.9	0.0	447.7	738.3	
				SLE Freq.	0.0			-3912.1			49.2	0.0	459.7	758.0	OK
				SLE Q.P.	0.0			-3541.1			44.5	0.0	416.1	686.1	OK
Camp.	5.00	4.62	7.70		32.4	4306.4	0.18	0.0	-6813.0	0.22					
				SLE Rare	8.7			0.0			0.0	0.2	8.4	1.1	
				SLE Freq.	8.9			0.0			0.0	0.2	8.6	1.1	OK
				SLE Q.P.	8.1			0.0			0.0	0.2	7.8	1.0	OK
6	9.60	4.62	12.32		0.0	4309.0	0.18	-6640.0	-10459.7	0.30					
				SLE Rare	0.0			-4898.5			89.9	0.0	755.9	1844.7	
				SLE Freq.	0.0			-4998.1			91.8	0.0	771.3	1882.2	OK
				SLE Q.P.	0.0			-4517.3			82.9	0.0	697.1	1701.2	OK

Da [m]	A [m]	Dx [m]	V_{Ed} [kg]	$V_{Rd,c}$ [kg]	V_{Rcd} [kg]	V_{Rd} [kg]	Staffe
Trave di fondazione 1 2 Sez. 3 Rett. 120x30 [cm] Cordolo_fondazione-2							
0.58	2.74	2.16	9063.6	14973.0	97943.0	21242.4	ø 10 6br. 20.0'
Trave di fondazione 2 3 Sez. 3 Rett. 120x30 [cm] Cordolo_fondazione-2							
0.01	2.74	2.74	6409.9	14973.0	97943.0	21242.4	ø 10 6br. 20.0'
Trave di fondazione 3 4 Sez. 3 Rett. 120x30 [cm] Cordolo_fondazione-2							
0.01	2.75	2.74	9487.0	14973.0	97943.0	21242.4	ø 10 6br. 20.0'
Trave di fondazione 4 5 Sez. 3 Rett. 120x30 [cm] Cordolo_fondazione-2							
0.01	0.48	0.47	7400.6	15354.3	97943.0	28323.2	ø 10 6br. 15.0'
0.48	1.69	1.21	15506.1	14973.0	97943.0	21242.4	ø 10 6br. 20.0'
1.69	2.16	0.47	27983.5	15151.6	97943.0	28323.2	ø 10 6br. 15.0'
Trave di fondazione 5 6 Sez. 1 Rett. 40x30 [cm] Cordolo_fondazione							
0.59	1.08	0.49	9121.8	5848.9	32647.7	14161.6	ø 10 2br. 10.0'
1.08	8.92	7.84	6621.8	5190.8	32647.7	7080.8	ø 10 2br. 20.0'
8.92	9.41	0.49	11658.7	5190.8	32647.7	14161.6	ø 10 2br. 10.0'

Travata: ***11 Travata 188 207***

Nodo	x [m]	A_{fe} [cm²]	A_{fi} [cm²]	q_T [kg/m]	M_{rif} [kgm]	M_{de} [kgm]	M_{re} [kgm]	x/d	M_{di} [kgm]	M_{ri} [kgm]	x/d	σ_{be} [kg/cm²]	σ_{bi} [kg/cm²]	σ_{fe} [kg/cm²]	σ_{fi} [kg/cm²]	w mm
Trave Sez. 4 a T 60x80x30x30 [cm] ***Tegoli*** **EC2 4.4.2.3. Fessurazione : tensione eccessiva barre di Intradosso**																
188	0.48	30.54	17.81			0.0	83324.3	0.19	-8273.8	49922.4	0.08					
					SLE Rare	0.0			-2081.9			3.5	0.0	37.6	168.0	
					SLE Freq.	0.0			-2081.9			3.5	0.0	37.6	168.0	OK
					SLE Q.P.	0.0			-965.1			1.6	0.0	17.4	77.9	OK
Camp.	6.86	30.54	12.72	2335.7	27639.0	0.0	81423.8	0.27	-55277.9	-35930.8	0.07					
					SLE Rare	0.0			-37514.5			70.3	0.0	711.5	4204.3	
					SLE Freq.	0.0			-37514.5			70.3	0.0	711.5	4204.3	NON VERIFICATO
					SLE Q.P.	0.0			-17390.			32.6	0.0	329.8	1949.0	NON VERIFICAT

									8									O
207	13.24	30.54	17.81			0.0	83324.3	0.19	-8274.6	49922.4	0.08							
					SLE Rare	0.0			-2082.1			3.5	0.0	37.6	168.0			
					SLE Freq.	0.0			-2082.1			3.5	0.0	37.6	168.0			OK
					SLE Q.P.	0.0			-965.2			1.6	0.0	17.4	77.9			OK

Da [m]	A [m]	Dx [m]	V_{Ed} [kg]	$V_{Rd,c}$ [kg]	V_{Rcd} [kg]	V_{Rd} [kg]	Staffe
Trave 188 207 Sez. 4 a T 60x80x30x30 [cm] Tegoli							
0.75	1.52	0.76	15601.5	11033.2	72309.5	33456.8	ø 10 2br. 12.5'
1.52	12.17	10.66	13749.3	9939.2	72309.5	16728.4	ø 10 2br. 25.0'
12.17	12.94	0.76	15603.0	11031.7	72309.5	33456.8	ø 10 2br. 12.5'

Travata: ***12 Travata 200 202***

Nodo	x [m]	A_{fe} [cm²]	A_{fi} [cm²]	q_T [kg/m]	M_{rif} [kgm]	M_{de} [kgm]	M_{re} [kgm]	x/d	M_{di} [kgm]	M_{ri} [kgm]	x/d	σ_{be} [kg/cm²]	σ_{bi} [kg/cm²]	σ_{fe} [kg/cm²]	σ_{fi} [kg/cm²]	w mm
Trave Sez. 4 a T 60x80x30x30 [cm] Tegoli																
200	0.05	3.39	12.14			0.0	9782.2	0.06	-8201.8	-34342.7	0.08					
					SLE Rare	0.0			-5503.2			13.8	0.0	40.1	625.3	
					SLE Freq.	0.0			-2338.9			5.9	0.0	17.0	265.8	OK
					SLE Q.P.	0.0			-5205.6			13.0	0.0	37.9	591.5	OK
Camp.	1.45	12.72	12.72	611.3	320.9	0.0	35434.6	0.09	-4601.9	-35940.8	0.07					
					SLE Rare	0.0			-2296.8			5.1	0.0	54.5	259.5	
					SLE Freq.	0.0			-1793.8			4.0	0.0	42.5	202.6	OK
					SLE Q.P.	0.0			-1887.9			4.2	0.0	44.8	213.3	OK
202	2.85	5.29	11.21			2379.9	15013.7	0.07	-998.0	-31784.1	0.08					
					SLE Rare	1565.8			-466.4			1.2	6.8	175.2	59.2	
					SLE Freq.	0.0			-919.3			2.3	0.0	10.3	104.0	OK
					SLE Q.P.	1807.1			0.0			0.0	7.8	202.2	68.4	OK

Da [m]	A [m]	Dx [m]	V_{Ed} [kg]	$V_{Rd,c}$ [kg]	V_{Rcd} [kg]	V_{Rd} [kg]	Staffe
Trave 200 202 Sez. 4 a T 60x80x30x30 [cm] Tegoli							
0.05	0.85	0.80	17556.3	9785.2	72309.5	33456.8	ø 10 2br. 12.5'
0.85	2.05	1.20	17720.9	9939.2	72309.5	20910.5	ø 10 2br. 20.0'
2.05	2.85	0.80	17830.8	9528.3	72309.5	33456.8	ø 10 2br. 12.5'

Travata: ***15 Travata 13 14 15 16***

Nodo	x [m]	A_{fe} [cm²]	A_{fi} [cm²]	q_T [kg/m]	M_{rif} [kgm]	M_{de} [kgm]	M_{re} [kgm]	x/d	M_{di} [kgm]	M_{ri} [kgm]	x/d	σ_{be} [kg/cm²]	σ_{bi} [kg/cm²]	σ_{fe} [kg/cm²]	σ_{fi} [kg/cm²]	w mm
Trave di fondazione Sez. 1 Rett. 40x30 [cm] Cordolo_fondazione																
13	0.40	4.62	4.62			0.0	4302.7	0.17	-1599.5	-4302.7	0.17					
					SLE Rare	0.0			-1190.2			30.9	0.0	165.3	1143.5	
					SLE Freq.	0.0			-1207.7			31.4	0.0	167.8	1160.3	OK
					SLE Q.P.	0.0			-1111.8			28.9	0.0	154.4	1068.1	OK
Camp.	5.50	4.62	4.62			0.0	4302.7	0.17	-58.8	-4302.7	0.17					
					SLE Rare	0.0			-44.2			1.1	0.0	6.1	42.4	
					SLE Freq.	0.0			-44.1			1.1	0.0	6.1	42.4	OK
					SLE Q.P.	0.0			-40.9			1.1	0.0	5.7	39.3	OK
14	10.60	9.20	10.78			0.0	8020.5	0.22	-4792.0	-9296.5	0.24					
					SLE Rare	0.0			-3598.1			63.0	0.0	484.0	1538.8	
					SLE Freq.	0.0			-3576.5			62.7	0.0	481.1	1529.5	OK
					SLE Q.P.	0.0			-3315.9			58.1	0.0	446.0	1418.1	OK
Trave di fondazione Sez. 1 Rett. 40x30 [cm] Cordolo_fondazione																
14	0.40	8.50	9.51			0.0	7456.0	0.21	-4827.5	-8273.9	0.23					
					SLE Rare	0.0			-3569.6			66.1	0.0	487.6	1721.4	
					SLE Freq.	0.0			-3547.9			65.7	0.0	484.6	1710.9	OK
					SLE Q.P.	0.0			-3289.3			60.9	0.0	449.3	1586.2	OK
Camp.	5.00	4.62	4.62			24.3	4302.7	0.17	0.0	-4302.7	0.17					
					SLE Rare	6.0			0.0			0.0	0.2	5.8	0.8	
					SLE Freq.	6.0			0.0			0.0	0.2	5.8	0.8	OK
					SLE Q.P.	5.7			0.0			0.0	0.1	5.5	0.8	OK
15	9.60	8.31	9.24			0.0	7301.9	0.21	-3318.7	-8054.3	0.22					
					SLE Rare	0.0			-2471.4			46.4	0.0	339.0	1225.4	
					SLE Freq.	0.0			-2480.8			46.6	0.0	340.3	1230.0	OK
					SLE Q.P.	0.0			-2393.3			44.9	0.0	328.3	1186.7	OK

Trave di fondazione Sez. 1 Rett. 40x30 [cm] Cordolo_fondazione																		
15	0.40	8.11	13.10			0.0	7145.1	0.20	-3240.3	-11133.0	0.27							
					SLE Rare	0.0			-2380.7			39.9	0.0	330.8	845.1			
					SLE Freq.	0.0			-2390.4			40.1	0.0	332.2	848.6	OK		
					SLE Q.P.	0.0			-2305.4			38.7	0.0	320.3	818.4	OK		
Camp.	2.67	4.62	4.62			792.2	4302.7	0.17	0.0	-4302.7	0.17							
					SLE Rare	566.7			0.0			0.0	14.7	544.5	78.7			
					SLE Freq.	569.1			0.0			0.0	14.8	546.8	79.1	OK		
					SLE Q.P.	548.3			0.0			0.0	14.2	526.8	76.2	OK		
16	4.95	3.81	3.81			93.3	3639.0	0.16	0.0	-3639.0	0.16							
					SLE Rare	71.8			0.0			0.0	2.0	68.4	7.9			
					SLE Freq.	69.3			0.0			0.0	2.0	65.9	7.6	OK		
					SLE Q.P.	68.1			0.0			0.0	1.9	64.9	7.5	OK		

Da [m]	A [m]	Dx [m]	V_{Ed} [kg]	$V_{Rd,c}$ [kg]	V_{Rcd} [kg]	V_{Rd} [kg]	Staffe
Trave di fondazione 13 14 Sez. 1 Rett. 40x30 [cm] Cordolo_fondazione							
0.59	1.09	0.49	2839.7	5190.8	32647.7	9441.1	ø 10 2br. 15.0'
1.09	9.91	8.83	4860.7	5190.8	32647.7	7080.8	ø 10 2br. 20.0'
9.91	10.41	0.49	8492.9	5505.0	32647.7	9441.1	ø 10 2br. 15.0'
Trave di fondazione 14 15 Sez. 1 Rett. 40x30 [cm] Cordolo_fondazione							
0.59	1.08	0.49	8476.7	5482.1	32647.7	9441.1	ø 10 2br. 15.0'
1.08	8.92	7.84	4814.7	5190.8	32647.7	7080.8	ø 10 2br. 20.0'
8.92	9.41	0.49	5829.8	5482.1	32647.7	9441.1	ø 10 2br. 15.0'
Trave di fondazione 15 16 Sez. 1 Rett. 40x30 [cm] Cordolo_fondazione							
0.59	4.95	4.36	5798.1	4870.3	32647.7	7080.8	ø 10 2br. 20.0'

Travata: ***16 Travata 18 19 20 21***

Nodo	x [m]	A_{fe} [cm²]	A_{fi} [cm²]	q_T [kg/m]	M_{rif} [kgm]	M_{de} [kgm]	M_{re} [kgm]	x/d	M_{di} [kgm]	M_{ri} [kgm]	x/d	σ_{be} [kg/cm²]	σ_{bi} [kg/cm²]	σ_{fe} [kg/cm²]	σ_{fi} [kg/cm²]	w mm
Trave di fondazione Sez. 1 Rett. 40x30 [cm] Cordolo_fondazione																
18	0.40	4.62	4.62			0.0	4302.7	0.17	-2777.2	-4302.7	0.17					
					SLE Rare	0.0			-1961.0			51.0	0.0	272.4	1884.0	
					SLE Freq.	0.0			-			40.3	0.0	215.6	1490.8	OK

								1551.7									
				SLE Q.P.	0.0			-1976.4			51.4	0.0	274.6	1898.9	OK
Camp.	5.50	4.62	4.62			0.0	4302.7	0.17	-95.8	-4302.7	0.17						
				SLE Rare	0.0			-69.6			1.8	0.0	9.7	66.8	
				SLE Freq.	0.0			-61.7			1.6	0.0	8.6	59.3	OK
				SLE Q.P.	0.0			-69.0			1.8	0.0	9.6	66.3	OK
19	10.60	9.20	18.47			0.0	8016.8	0.20	-7631.2	-15304.2	0.35						
				SLE Rare	0.0			-5578.5			82.8	0.0	745.9	1426.3	
				SLE Freq.	0.0			-5141.0			76.3	0.0	687.4	1314.4	OK
				SLE Q.P.	0.0			-5502.5			81.6	0.0	735.7	1406.8	OK
Trave di fondazione Sez. 1 Rett. 40x30 [cm] Cordolo_fondazione																	
19	0.40	8.50	14.13			0.0	7453.3	0.20	-7688.2	-11947.3	0.29						
				SLE Rare	0.0			-5534.3			90.0	0.0	760.1	1827.5	
				SLE Freq.	0.0			-5099.6			83.0	0.0	700.4	1683.9	OK
				SLE Q.P.	0.0			-5458.9			88.8	0.0	749.7	1802.6	OK
Camp.	5.00	4.62	4.62			38.4	4302.7	0.17	0.0	-4302.7	0.17						
				SLE Rare	9.5			0.0			0.0	0.2	9.1	1.3	
				SLE Freq.	8.9			0.0			0.0	0.2	8.6	1.2	OK
				SLE Q.P.	9.3			0.0			0.0	0.2	8.9	1.3	OK
20	9.60	9.53	13.85			0.0	8293.0	0.21	-5416.2	-11746.2	0.27						
				SLE Rare	0.0			-3956.3			63.5	0.0	528.2	1330.7	
				SLE Freq.	0.0			-3779.7			60.7	0.0	504.6	1271.3	OK
				SLE Q.P.	0.0			-3811.8			61.2	0.0	508.9	1282.1	OK
Trave di fondazione Sez. 1 Rett. 40x30 [cm] Cordolo_fondazione																	
20	0.40	9.65	13.10			0.0	8390.0	0.21	-5604.3	-11146.7	0.26						
				SLE Rare	0.0			-4041.4			65.9	0.0	538.0	1434.5	
				SLE Freq.	0.0			-3862.0			62.9	0.0	514.1	1370.9	OK
				SLE Q.P.	0.0			-3900.2			63.6	0.0	519.2	1384.4	OK
Camp.	2.50	6.16	4.62			2812.3	5562.5	0.19	0.0	-4304.9	0.18						
				SLE Rare	2104.3			0.0			0.0	48.9	1534.5	312.4	
				SLE Freq.	2020.0			0.0			0.0	47.0	1473.0	299.8	OK

				SLE Q.P.		2060.9			0.0			0.0	47.9	1502.9	305.9	OK
21	4.60	6.16	10.78			0.0	5559.5	0.19	-5812.7	-9282.0	0.26					
				SLE Rare		0.0			-4240.3			78.7	0.0	624.0	1813.0	
				SLE Freq.		0.0			-4079.1			75.7	0.0	600.3	1744.1	OK
				SLE Q.P.		0.0			-4202.1			78.0	0.0	618.4	1796.7	OK

Da [m]	A [m]	Dx [m]	V_{Ed} [kg]	$V_{Rd,c}$ [kg]	V_{Rcd} [kg]	V_{Rd} [kg]	Staffe
Trave di fondazione 18 19 Sez. 1 Rett. 40x30 [cm] Cordolo_fondazione							
0.59	1.09	0.49	4929.8	5190.8	32647.7	14161.6	ø 10 2br. 10.0'
1.09	9.91	8.83	7740.8	5190.8	32647.7	9441.1	ø 10 2br. 15.0'
9.91	10.41	0.49	13525.6	5505.0	32647.7	14161.6	ø 10 2br. 10.0'
Trave di fondazione 19 20 Sez. 1 Rett. 40x30 [cm] Cordolo_fondazione							
0.59	1.19	0.60	13500.0	5289.7	32647.7	14161.6	ø 10 2br. 10.0'
1.19	8.81	7.62	6496.9	5190.8	32647.7	7080.8	ø 10 2br. 20.0'
8.81	9.41	0.60	9515.2	5321.8	32647.7	14161.6	ø 10 2br. 10.0'
Trave di fondazione 20 21 Sez. 1 Rett. 40x30 [cm] Cordolo_fondazione							
0.58	1.05	0.47	10181.5	5851.2	32647.7	11329.3	ø 10 2br. 12.5'
1.05	3.95	2.90	6050.8	5713.3	32647.7	7080.8	ø 10 2br. 20.0'
3.95	4.42	0.47	10546.9	5713.3	32647.7	11329.3	ø 10 2br. 12.5'

Travata: ***16 Travata 34 35 36 37 38***

Nodo	x [m]	A_{fe} [cm²]	A_{fi} [cm²]	q_T [kg/m]	M_{rif} [kgm]	M_{de} [kgm]	M_{re} [kgm]	x/d	M_{di} [kgm]	M_{ri} [kgm]	x/d	σ_{be} [kg/cm²]	σ_{bi} [kg/cm²]	σ_{fe} [kg/cm²]	σ_{fi} [kg/cm²]	w mm
Trave Sez. 5 Rett. 30x25 [cm] Cordolo																
34	0.40	7.63	7.63			1193.0	5037.1	0.29	-1013.0	-5037.1	0.29					
				SLE Rare		778.1			-149.0			5.3	27.6	607.1	165.1	
				SLE Freq.		61.3			-155.6			5.5	2.2	47.8	121.4	OK
				SLE Q.P.		0.0			-156.9			5.6	0.0	33.3	122.4	OK
Camp.	1.57	7.63	7.63	0.0	0.0	277.7	5037.1	0.29	-188.4	-5037.1	0.29					
				SLE Rare		132.6			-2.6			0.1	4.7	103.5	28.1	
				SLE Freq.		31.6			-3.6			0.1	1.1	24.7	6.7	OK
				SLE Q.P.		0.0			-6.7			0.2	0.0	1.4	5.3	OK
35	2.74	15.27	15.27			774.7	9555.4	0.36	-791.4	-9555.4	0.36					
				SLE Rare		148.0			-512.8			12.5	3.6	90.9	207.7	
				SLE Freq.		148.3			0.0			0.0	3.6	60.1	26.3	OK
				SLE Q.P.		143.4			0.0			0.0	3.5	58.1	25.4	OK

Trave Sez. 5 Rett. 30x25 [cm] Cordolo																			
35	0.01	15.27	15.27			932.0	9555.4	0.36	-429.6	-9555.4	0.36								
				SLE Rare		627.1			0.0			0.0	15.3	254.0	111.2				
				SLE Freq.		241.1			0.0			0.0	5.9	97.7	42.8	OK			
				SLE Q.P.		73.5			0.0			0.0	1.8	29.8	13.0	OK			
Camp.	1.38	7.63	7.63	0.0	0.0	75.3	5037.1	0.29	-58.4	-5037.1	0.29								
				SLE Rare		19.2			-0.0			0.0	0.7	15.0	4.1				
				SLE Freq.		25.2			-0.0			0.0	0.9	19.6	5.3	OK			
				SLE Q.P.		22.0			0.0			0.0	0.8	17.1	4.7	OK			
36	2.74	15.27	15.27			507.7	9555.4	0.36	-915.1	-9555.4	0.36								
				SLE Rare		0.0			-609.3			14.8	0.0	108.0	246.8				
				SLE Freq.		0.0			-214.8			5.2	0.0	38.1	87.0	OK			
				SLE Q.P.		0.0			-29.6			0.7	0.0	5.2	12.0	OK			
Trave Sez. 5 Rett. 30x25 [cm] Cordolo																			
36	0.01	15.27	15.27			824.5	9555.4	0.36	-434.7	-9555.4	0.36								
				SLE Rare		562.3			-17.2			0.4	13.7	227.8	99.7				
				SLE Freq.		104.8			-5.0			0.1	2.5	42.4	18.6	OK			
				SLE Q.P.		50.4			0.0			0.0	1.2	20.4	8.9	OK			
Camp.	1.38	7.63	7.63	0.0	0.0	172.9	5037.1	0.29	0.0	-5037.1	0.29								
				SLE Rare		90.8			0.0			0.0	3.2	70.9	19.3				
				SLE Freq.		77.5			0.0			0.0	2.7	60.5	16.4	OK			
				SLE Q.P.		75.8			0.0			0.0	2.7	59.1	16.1	OK			
37	2.75	15.27	17.81			564.1	9566.2	0.34	-580.1	-11033.9	0.39								
				SLE Rare		159.3			-380.6			8.8	3.7	67.9	132.9				
				SLE Freq.		152.5			0.0			0.0	3.6	61.9	25.2	OK			
				SLE Q.P.		101.2			0.0			0.0	2.4	41.0	16.7	OK			
Trave Sez. 5 Rett. 30x25 [cm] Cordolo																			
37	0.01	15.27	17.81			1906.2	9566.2	0.34	-1.9	-11033.9	0.39								
				SLE Rare		1346.4			0.0			0.0	31.4	546.2	222.6				
				SLE Freq.		837.5			0.0			0.0	19.5	339.7	138.4	OK			
				SLE Q.P.		645.2			0.0			0.0	15.0	261.8	106.7	OK			
Camp.	1.18	7.63	10.18	0.0	0.0	89.0	5036.5	0.28	-377.0	-6536.6	0.34								
				SLE Rare		0.0			-145.3			4.7	0.0	32.0	86.2				
				SLE Freq.		0.0			-50.2			1.6	0.0	11.1	29.8	OK			
				SLE Q.P.		0.0			-28.5			0.9	0.0	6.3	16.9	OK			
38	2.35	7.63	10.18			166.7	5036.5	0.28	-2331.4	-6536.6	0.34								
				SLE Rare		0.0			-1637.0			52.7	0.0	360.9	970.9				
				SLE Freq.		0.0			-937.8			30.2	0.0	206.7	556.2	OK			
				SLE Q.P.		0.0			-702.1			22.6	0.0	154.8	416.4	OK			

Da [m]	A [m]	Dx [m]	V_{Ed} [kg]	$V_{Rd,c}$ [kg]	V_{Rcd} [kg]	V_{Rd} [kg]	Staffe
Trave 34 35 Sez. 5 Rett. 30x25 [cm] Cordolo							

0.58	0.81	0.23	6224.2	4619.3	19703.4	22791.3	ø 10 2br. 5.0'
0.81	2.51	1.70	6224.2	4619.3	19703.4	7597.1	ø 10 2br. 15.0'
2.51	2.74	0.23	6224.2	5424.1	19703.4	22791.3	ø 10 2br. 5.0'
					Trave 35 36 Sez. 5 Rett. 30x25 [cm] Cordolo		
0.01	0.26	0.25	6977.3	5424.1	19703.4	22791.3	ø 10 2br. 5.0'
0.26	2.49	2.24	6977.3	4619.3	19703.4	7597.1	ø 10 2br. 15.0'
2.49	2.74	0.25	6977.3	5424.1	19703.4	22791.3	ø 10 2br. 5.0'
					Trave 36 37 Sez. 5 Rett. 30x25 [cm] Cordolo		
0.01	0.26	0.25	7507.9	5424.1	19703.4	22791.3	ø 10 2br. 5.0'
0.26	2.50	2.24	7507.9	4619.3	19703.4	7597.1	ø 10 2br. 15.0'
2.50	2.75	0.25	7507.9	5424.1	19703.4	22791.3	ø 10 2br. 5.0'
					Trave 37 38 Sez. 5 Rett. 30x25 [cm] Cordolo		
0.01	0.24	0.23	6878.1	5424.1	19703.4	22791.3	ø 10 2br. 5.0'
0.24	1.93	1.70	6878.1	5084.1	19703.4	7597.1	ø 10 2br. 15.0'
1.93	2.16	0.23	6878.1	5084.1	19703.4	22791.3	ø 10 2br. 5.0'

Travata: ***17 Travata 41 42 43 44 45***

Nodo	x [m]	A_{fe} [cm²]	A_{fi} [cm²]	q_T [kg/m]	M_{rif} [kgm]	M_{de} [kgm]	M_{re} [kgm]	x/d	M_{di} [kgm]	M_{ri} [kgm]	x/d	σ_{be} [kg/cm²]	σ_{bi} [kg/cm²]	σ_{fe} [kg/cm²]	σ_{fi} [kg/cm²]	w mm
Trave Sez. 5 Rett. 30x25 [cm] Cordolo																
41	0.40	7.63	7.63			706.3	5037.1	0.29	-231.9	-5037.1	0.29					
				SLE Rare		478.6			0.0			0.0	17.0	373.4	101.5	
				SLE Freq.		148.2			0.0			0.0	5.3	115.6	31.4	OK
				SLE Q.P.		63.3			0.0			0.0	2.2	49.4	13.4	OK
Camp.	1.58	7.63	7.63	0.0	0.0	558.0	5037.1	0.29	-179.8	-5037.1	0.29					
				SLE Rare		369.5			0.0			0.0	13.1	288.3	78.4	
				SLE Freq.		113.9			0.0			0.0	4.0	88.9	24.2	OK
				SLE Q.P.		48.3			0.0			0.0	1.7	37.7	10.2	OK
42	2.75	15.27	15.27			397.2	9555.4	0.36	-123.2	-9555.4	0.36					
				SLE Rare		260.5			0.0			0.0	6.3	105.5	46.2	
				SLE Freq.		79.6			0.0			0.0	1.9	32.3	14.1	OK
				SLE Q.P.		33.3			0.0			0.0	0.8	13.5	5.9	OK
Trave Sez. 5 Rett. 30x25 [cm] Cordolo																
42	0.00	15.27	15.27			384.7	9555.4	0.36	-118.8	-9555.4	0.36					
				SLE Rare		260.5			0.0			0.0	6.3	105.5	46.2	
				SLE Freq.		79.6			0.0			0.0	1.9	32.3	14.1	OK
				SLE Q.P.		33.3			0.0			0.0	0.8	13.5	5.9	OK
Camp.	1.38	7.63	7.63	0.0	0.0	223.8	5037.1	0.29	-62.2	-5037.1	0.29					
				SLE Rare		142.9			0.0			0.0	5.1	111.5	30.3	
				SLE Freq.		42.6			0.0			0.0	1.5	33.3	9.0	OK
				SLE Q.P.		17.2			0.0			0.0	0.6	13.4	3.6	OK

43	2.75	15.27	15.27			50.4	9555.4	0.36	-1.3	-9555.4	0.36					
					SLE Rare	25.3			0.0			0.0	0.6	10.3	4.5	
					SLE Freq.	5.6			0.0			0.0	0.1	2.3	1.0	OK
					SLE Q.P.	1.0			0.0			0.0	0.0	0.4	0.2	OK
Trave Sez. 5 Rett. 30x25 [cm] Cordolo																
43	0.00	15.27	15.27			37.9	9555.4	0.36	-0.3	-9555.4	0.36					
					SLE Rare	25.3			0.0			0.0	0.6	10.3	4.5	
					SLE Freq.	5.6			0.0			0.0	0.1	2.3	1.0	OK
					SLE Q.P.	1.0			0.0			0.0	0.0	0.4	0.2	OK
Camp.	1.38	7.63	7.63	0.0	0.0	68.8	5037.1	0.29	-148.2	-5037.1	0.29					
					SLE Rare	0.0			-92.4			3.3	0.0	19.6	72.1	
					SLE Freq.	0.0			-31.4			1.1	0.0	6.7	24.5	OK
					SLE Q.P.	0.0			-15.1			0.5	0.0	3.2	11.8	OK
44	2.75	15.27	15.27			125.5	9555.4	0.36	-309.3	-9555.4	0.36					
					SLE Rare	0.0			-210.2			5.1	0.0	37.3	85.1	
					SLE Freq.	0.0			-68.4			1.7	0.0	12.1	27.7	OK
					SLE Q.P.	0.0			-31.3			0.8	0.0	5.5	12.7	OK
Trave Sez. 5 Rett. 30x25 [cm] Cordolo																
44	0.00	15.27	15.27			129.6	9555.4	0.36	-321.8	-9555.4	0.36					
					SLE Rare	0.0			-210.2			5.1	0.0	37.3	85.1	
					SLE Freq.	0.0			-68.4			1.7	0.0	12.1	27.7	OK
					SLE Q.P.	0.0			-31.3			0.8	0.0	5.5	12.7	OK
Camp.	1.17	7.63	7.63	0.0	0.0	186.1	5037.1	0.29	-482.4	-5037.1	0.29					
					SLE Rare	0.0			-319.0			11.3	0.0	67.7	248.9	
					SLE Freq.	0.0			-102.7			3.6	0.0	21.8	80.1	OK
					SLE Q.P.	0.0			-46.2			1.6	0.0	9.8	36.1	OK
45	2.35	7.63	7.63			238.2	5037.1	0.29	-630.5	-5037.1	0.29					
					SLE Rare	0.0			-427.9			15.2	0.0	90.8	333.9	
					SLE Freq.	0.0			-136.9			4.9	0.0	29.0	106.8	OK
					SLE Q.P.	0.0			-61.2			2.2	0.0	13.0	47.7	OK

Da [m]	A [m]	Dx [m]	V_{Ed} [kg]	$V_{Rd,c}$ [kg]	V_{Rcd} [kg]	V_{Rd} [kg]	Staffe
Trave 41 42 Sez. 5 Rett. 30x25 [cm] Cordolo							
0.58	0.81	0.23	6209.6	4619.3	19703.4	22791.3	ø 10 2br. 5.0'
0.81	2.52	1.70	6209.6	4619.3	19703.4	7597.1	ø 10 2br. 15.0'
2.52	2.75	0.23	6209.6	5424.1	19703.4	22791.3	ø 10 2br. 5.0'
Trave 42 43 Sez. 5 Rett. 30x25 [cm] Cordolo							
0.00	0.25	0.25	6949.4	5424.1	19703.4	22791.3	ø 10 2br. 5.0'
0.25	2.50	2.25	6949.4	4619.3	19703.4	7597.1	ø 10 2br. 15.0'
2.50	2.75	0.25	6949.4	5424.1	19703.4	22791.3	ø 10 2br. 5.0'
Trave 43 44 Sez. 5 Rett. 30x25 [cm] Cordolo							

0.00	0.25	0.25	6941.0	5424.1	19703.4	22791.3	ø 10 2br. 5.0'
0.25	2.50	2.25	6941.0	4619.3	19703.4	7597.1	ø 10 2br. 15.0'
2.50	2.75	0.25	6941.0	5424.1	19703.4	22791.3	ø 10 2br. 5.0'
							Trave 44 45 Sez. 5 Rett. 30x25 [cm] Cordolo
0.00	0.23	0.23	6218.4	5424.1	19703.4	22791.3	ø 10 2br. 5.0'
0.23	1.93	1.70	6218.4	4619.3	19703.4	7597.1	ø 10 2br. 15.0'
1.93	2.16	0.23	6218.4	4619.3	19703.4	22791.3	ø 10 2br. 5.0'

Travata: ***18 Travata 47 48 49 50 51***

Nodo	x [m]	A_{fe} [cm²]	A_{fi} [cm²]	q_T [kg/m]	M_{rif} [kg]	M_{de} [kg]	M_{re} [kg]	x/d	M_{di} [kg]	M_{ri} [kg]	x/d	σ_{be} [kg/cm²]	σ_{bi} [kg/cm²]	σ_{fe} [kg/cm²]	σ_{fi} [kg/cm²]	w mm
Trave Sez. 5 Rett. 30x25 [cm] Cordolo																
47	0.40	7.63	7.63			595.5	5037.1	0.29	-154.5	-5037.1	0.29					
				SLE Rare		407.4			0.0			0.0	14.4	317.8	86.4	
				SLE Freq.		161.8			0.0			0.0	5.7	126.2	34.3	OK
				SLE Q.P.		113.7			0.0			0.0	4.0	88.7	24.1	OK
Camp.	1.58	7.63	7.63	0.0	0.0	466.0	5037.1	0.29	-120.0	-5037.1	0.29					
				SLE Rare		311.3			0.0			0.0	11.0	242.9	66.0	
				SLE Freq.		123.6			0.0			0.0	4.4	96.4	26.2	OK
				SLE Q.P.		87.8			0.0			0.0	3.1	68.5	18.6	OK
48	2.75	15.27	15.27			325.6	9555.4	0.36	-82.6	-9555.4	0.36					
				SLE Rare		215.2			0.0			0.0	5.2	87.2	38.2	
				SLE Freq.		85.4			0.0			0.0	2.1	34.6	15.1	OK
				SLE Q.P.		62.0			0.0			0.0	1.5	25.1	11.0	OK
Trave Sez. 5 Rett. 30x25 [cm] Cordolo																
48	0.00	15.27	15.27			314.7	9555.4	0.36	-79.7	-9555.4	0.36					
				SLE Rare		215.2			0.0			0.0	5.2	87.2	38.2	
				SLE Freq.		85.4			0.0			0.0	2.1	34.6	15.1	OK
				SLE Q.P.		62.0			0.0			0.0	1.5	25.1	11.0	OK
Camp.	1.38	7.63	7.63	0.0	0.0	174.2	5037.1	0.29	-42.3	-5037.1	0.29					
				SLE Rare		111.6			0.0			0.0	4.0	87.1	23.7	
				SLE Freq.		44.3			0.0			0.0	1.6	34.6	9.4	OK
				SLE Q.P.		34.1			0.0			0.0	1.2	26.6	7.2	OK
49	2.75	15.27	15.27			22.8	9555.4	0.36	-2.0	-9555.4	0.36					
				SLE Rare		8.0			0.0			0.0	0.2	3.2	1.4	
				SLE Freq.		3.1			0.0			0.0	0.1	1.3	0.6	OK
				SLE Q.P.		6.3			0.0			0.0	0.2	2.5	1.1	OK
Trave Sez. 5 Rett. 30x25 [cm] Cordolo																
49	0.00	15.27	15.27			11.9	9555.4	0.36	0.0	-9555.4	0.36					
				SLE Rare		8.0			0.0			0.0	0.2	3.2	1.4	
				SLE Freq.		3.1			0.0			0.0	0.1	1.3	0.6	OK
				SLE Q.P.		6.3			0.0			0.0	0.2	2.5	1.1	OK

Camp.	1.38	7.63	7.63	0.0	0.0	46.4	5037.1	0.29	-150.6	-5037.1	0.29						
				SLE Rare		0.0			-95.8			3.4	0.0	20.3	74.7		
				SLE Freq.		0.0			-38.1			1.4	0.0	8.1	29.7	OK	
				SLE Q.P.		0.0			-21.6			0.8	0.0	4.6	16.9	OK	
50	2.75	15.27	15.27			83.8	9555.4	0.36	-291.3	-9555.4	0.36						
				SLE Rare		0.0			-199.5			4.9	0.0	35.4	80.8		
				SLE Freq.		0.0			-79.3			1.9	0.0	14.1	32.1	OK	
				SLE Q.P.		0.0			-49.5			1.2	0.0	8.8	20.1	OK	
Trave Sez. 5 Rett. 30x25 [cm] Cordolo																	
50	0.00	15.27	15.27			84.5	9555.4	0.36	-302.2	-9555.4	0.36						
				SLE Rare		0.0			-199.5			4.9	0.0	35.4	80.8		
				SLE Freq.		0.0			-79.3			1.9	0.0	14.1	32.1	OK	
				SLE Q.P.		0.0			-49.5			1.2	0.0	8.8	20.1	OK	
Camp.	1.17	7.63	7.63	0.0	0.0	121.8	5037.1	0.29	-442.4	-5037.1	0.29						
				SLE Rare		0.0			-295.5			10.5	0.0	62.7	230.5		
				SLE Freq.		0.0			-117.4			4.2	0.0	24.9	91.6	OK	
				SLE Q.P.		0.0			-75.3			2.7	0.0	16.0	58.8	OK	
51	2.35	7.63	7.63			156.3	5037.1	0.29	-571.7	-5037.1	0.29						
				SLE Rare		0.0			-391.4			13.9	0.0	83.0	305.4		
				SLE Freq.		0.0			-155.5			5.5	0.0	33.0	121.3	OK	
				SLE Q.P.		0.0			-101.1			3.6	0.0	21.5	78.9	OK	

Da [m]	A [m]	Dx [m]	V_{Ed} [kg]	$V_{Rd,c}$ [kg]	V_{Rcd} [kg]	V_{Rd} [kg]	Staffe
				Trave 47 48 Sez. 5 Rett. 30x25 [cm] Cordolo			
0.58	0.81	0.23	6209.6	4619.3	19703.4	22791.3	ø 10 2br. 5.0'
0.81	2.52	1.70	6209.6	4619.3	19703.4	7597.1	ø 10 2br. 15.0'
2.52	2.75	0.23	6209.6	5424.1	19703.4	22791.3	ø 10 2br. 5.0'
				Trave 48 49 Sez. 5 Rett. 30x25 [cm] Cordolo			
0.00	0.25	0.25	6949.4	5424.1	19703.4	22791.3	ø 10 2br. 5.0'
0.25	2.50	2.25	6949.4	4619.3	19703.4	7597.1	ø 10 2br. 15.0'
2.50	2.75	0.25	6949.4	5424.1	19703.4	22791.3	ø 10 2br. 5.0'
				Trave 49 50 Sez. 5 Rett. 30x25 [cm] Cordolo			
0.00	0.25	0.25	6941.0	5424.1	19703.4	22791.3	ø 10 2br. 5.0'
0.25	2.50	2.25	6941.0	4619.3	19703.4	7597.1	ø 10 2br. 15.0'
2.50	2.75	0.25	6941.0	5424.1	19703.4	22791.3	ø 10 2br. 5.0'
				Trave 50 51 Sez. 5 Rett. 30x25 [cm] Cordolo			
0.00	0.23	0.23	6218.4	5424.1	19703.4	22791.3	ø 10 2br. 5.0'
0.23	1.93	1.70	6218.4	4619.3	19703.4	7597.1	ø 10 2br. 15.0'
1.93	2.16	0.23	6218.4	4619.3	19703.4	22791.3	ø 10 2br. 5.0'

Travata: ***20 Travata 52 53 54 55 56***

Nodo	x [m]	A_{fe} [cm²]	A_{fi} [cm²]	q_T [kg/m]	M_{rif} [kgm]	M_{de} [kgm]	M_{re} [kgm]	x/d	M_{di} [kgm]	M_{ri} [kgm]	x/d	σ_{be} [kg/cm²]	σ_{bi} [kg/cm²]	σ_{fe} [kg/cm²]	σ_{fi} [kg/cm²]	w mm
Trave Sez. 5 Rett. 30x25 [cm] Cordolo																
52	0.40	10.18	7.63			2485.5	6536.6	0.34	-211.0	-5036.5	0.28					
					SLE Rare	1721.5			0.0			0.0	55.4	1020.9	379.5	
					SLE Freq.	1264.1			0.0			0.0	40.7	749.7	278.7	OK
					SLE Q.P.	671.7			0.0			0.0	21.6	398.4	148.1	OK
Camp.	1.45	10.18	7.63	14.9	5.9	423.6	6536.6	0.34	-83.6	-5036.5	0.28					
					SLE Rare	156.7			-4.4			0.2	5.0	93.0	34.6	
					SLE Freq.	92.3			-4.4			0.2	3.0	54.8	20.4	OK
					SLE Q.P.	37.0			-4.4			0.2	1.2	21.9	8.2	OK
53	2.50	17.81	15.27			84.2	11033.9	0.39	-2005.7	-9566.2	0.34					
					SLE Rare	0.0			-1392.8			32.4	0.0	230.3	565.1	
					SLE Freq.	0.0			-1064.3			24.8	0.0	175.9	431.8	OK
					SLE Q.P.	0.0			-582.5			13.6	0.0	96.3	236.3	OK
Trave Sez. 5 Rett. 30x25 [cm] Cordolo																
53	0.01	17.81	15.27			1570.1	11033.9	0.39	-423.9	-9566.2	0.34					
					SLE Rare	1071.6			0.0			0.0	24.9	374.3	191.1	
					SLE Freq.	657.8			0.0			0.0	15.3	229.8	117.3	OK
					SLE Q.P.	241.0			0.0			0.0	5.6	84.2	43.0	OK
Camp.	1.25	7.63	7.63	0.0	0.0	0.0	5037.1	0.29	-287.4	-5037.1	0.29					
					SLE Rare	0.0			-150.0			5.3	0.0	31.8	117.0	
					SLE Freq.	0.0			-153.7			5.5	0.0	32.6	119.9	OK
					SLE Q.P.	0.0			-89.1			3.2	0.0	18.9	69.5	OK
54	2.49	15.27	15.27			240.8	9555.4	0.36	-1870.5	-9555.4	0.36					
					SLE Rare	0.0			-1286.4			31.3	0.0	228.1	521.1	
					SLE Freq.	0.0			-952.8			23.2	0.0	168.9	385.9	OK
					SLE Q.P.	0.0			-419.2			10.2	0.0	74.3	169.8	OK
Trave Sez. 5 Rett. 30x25 [cm] Cordolo																
54	0.01	15.27	15.27			213.5	9555.4	0.36	-1053.7	-9555.4	0.36					
					SLE Rare	117.8			-727.2			17.7	2.9	128.9	294.6	
					SLE Freq.	0.0			-723.0			17.6	0.0	128.2	292.8	OK
					SLE Q.P.	0.0			-408.6			9.9	0.0	72.4	165.5	OK
Camp.	1.25	7.63	7.63	0.0	0.0	0.0	5037.1	0.29	-292.5	-5037.1	0.29					
					SLE Rare	0.0			-160.1			5.7	0.0	34.0	124.9	
					SLE Freq.	0.0			-168.1			6.0	0.0	35.7	131.2	OK
					SLE Q.P.	0.0			-93.5			3.3	0.0	19.8	72.9	OK
55	2.49	15.27	15.27			814.7	9555.4	0.36	-615.5	-9555.4	0.36					
					SLE Rare	407.1			-404.0			9.8	9.9	164.9	163.6	
					SLE Freq.	386.7			0.0			0.0	9.4	156.6	68.6	OK
					SLE Q.P.	221.6			0.0			0.0	5.4	89.8	39.3	OK
Trave Sez. 5 Rett. 30x25 [cm] Cordolo																

55	0.01	15.27	15.27			0.0	9555.4	0.36	-1325.8	-9555.4	0.36							
					SLE Rare	0.0			-942.8			22.9	0.0	167.1	381.9			
					SLE Freq.	0.0			-981.2			23.9	0.0	173.9	397.4	OK		
					SLE Q.P.	0.0			-597.8			14.5	0.0	106.0	242.2	OK		
Camp.	1.05	7.63	7.63	14.9	5.9	243.8	5037.1	0.29	-105.3	-5037.1	0.29							
					SLE Rare	53.5			-66.3			2.4	1.9	41.8	51.7			
					SLE Freq.	54.3			-4.4			0.2	1.9	42.4	11.5	OK		
					SLE Q.P.	26.9			-4.4			0.2	1.0	21.0	5.7	OK		
56	2.10	7.63	7.63			1502.5	5037.1	0.29	-49.3	-5037.1	0.29							
					SLE Rare	1065.1			0.0			0.0	37.8	831.0	226.0			
					SLE Freq.	1104.9			0.0			0.0	39.2	862.1	234.4	OK		
					SLE Q.P.	666.8			0.0			0.0	23.7	520.2	141.5	OK		

Da [m]	A [m]	Dx [m]	V_{Ed} [kg]	$V_{Rd,c}$ [kg]	V_{Rcd} [kg]	V_{Rd} [kg]	Staffe
Trave 52 53 Sez. 5 Rett. 30x25 [cm] Cordolo							
0.58	0.81	0.23	7688.0	4619.3	19703.4	22791.3	ø 10 2br. 5.0'
0.81	2.27	1.46	7684.9	4619.3	19703.4	9116.5	ø 10 2br. 12.5'
2.27	2.50	0.23	7674.8	5424.1	19703.4	22791.3	ø 10 2br. 5.0'
Trave 53 54 Sez. 5 Rett. 30x25 [cm] Cordolo							
0.01	0.26	0.25	8272.1	5424.1	19703.4	22791.3	ø 10 2br. 5.0'
0.26	2.24	1.99	8272.1	4619.3	19703.4	9116.5	ø 10 2br. 12.5'
2.24	2.49	0.25	8272.1	5424.1	19703.4	22791.3	ø 10 2br. 5.0'
Trave 54 55 Sez. 5 Rett. 30x25 [cm] Cordolo							
0.01	0.26	0.25	7698.8	5424.1	19703.4	22791.3	ø 10 2br. 5.0'
0.26	2.24	1.98	7698.8	4619.3	19703.4	9116.5	ø 10 2br. 12.5'
2.24	2.49	0.25	7698.8	5424.1	19703.4	22791.3	ø 10 2br. 5.0'
Trave 55 56 Sez. 5 Rett. 30x25 [cm] Cordolo							
0.01	0.23	0.23	6970.3	5424.1	19703.4	22791.3	ø 10 2br. 5.0'
0.23	1.69	1.46	6967.2	4619.3	19703.4	7597.1	ø 10 2br. 15.0'
1.69	1.92	0.23	6968.1	4619.3	19703.4	22791.3	ø 10 2br. 5.0'

Travata: ***21 Travata 57 58***

Nodo	x [m]	A_{fe} [cm²]	A_{fi} [cm²]	q_T [kg/m]	M_{rif} [kgm]	M_{de} [kgm]	M_{re} [kgm]	x/d	M_{di} [kgm]	M_{ri} [kgm]	x/d	σ_{be} [kg/cm²]	σ_{bi} [kg/cm²]	σ_{fe} [kg/cm²]	σ_{fi} [kg/cm²]	w mm
Trave Sez. 5 Rett. 30x25 [cm] Cordolo																
57	0.05	7.63	7.63			393.3	5037.1	0.29	-959.8	-5037.1	0.29					
					SLE Rare	223.1			-554.8			19.7	7.9	174.1	432.9	
					SLE Freq.	0.0			-417.1			14.8	0.0	88.5	325.4	OK
					SLE Q.P.	0.0			-576.0			20.4	0.0	122.2	449.4	OK

Camp.	2.46	7.63	7.63	0.0	0.0	77.7	5037.1	0.29	-83.1	-5037.1	0.29								
				SLE Rare		9.1			-41.1			1.5	0.3	8.7	32.0				
				SLE Freq.		9.2			-4.8			0.2	0.3	7.1	3.8	OK			
				SLE Q.P.		8.6			-7.3			0.3	0.3	6.7	5.7	OK			
58	4.88	7.63	7.63			1043.6	5037.1	0.29	-510.0	-5037.1	0.29								
				SLE Rare		556.9			-296.6			10.5	19.8	434.5	231.4				
				SLE Freq.		425.0			0.0			0.0	15.1	331.5	90.2	OK			
				SLE Q.P.		578.6			0.0			0.0	20.5	451.4	122.8	OK			

Da [m]	A [m]	Dx [m]	V_{Ed} [kg]	$V_{Rd,c}$ [kg]	V_{Rcd} [kg]	V_{Rd} [kg]	Staffe
Trave 57 58 Sez. 5 Rett. 30x25 [cm] Cordolo							
0.05	0.30	0.25	2087.9	4619.3	19703.4	22791.3	ø 10 2br. 5.0'
0.30	4.63	4.32	2087.9	4619.3	19703.4	7597.1	ø 10 2br. 15.0'
4.63	4.88	0.25	2087.9	4619.3	19703.4	22791.3	ø 10 2br. 5.0'

Travata: ***22 Travata 59 60 61 62 63***

Nodo	x [m]	A_{fe} [cm²]	A_{fi} [cm²]	q_T [kg/m]	M_{rif} [kgm]	M_{de} [kgm]	M_{re} [kgm]	x/d	M_{di} [kgm]	M_{ri} [kgm]	x/d	σ_{be} [kg/cm²]	σ_{bi} [kg/cm²]	σ_{fe} [kg/cm²]	σ_{fi} [kg/cm²]	w mm
Trave Sez. 1 a _| 55x70x40x45 [cm] Soppalco																
59	0.40	12.15	12.72			9842.9	29538.4	0.09	-8103.0	-30629.5	0.10					
				SLE Rare		6450.6			-987.6			3.4	19.0	846.2	196.6	
				SLE Freq.		411.2			-1105.7			3.8	1.2	53.9	146.4	OK
				SLE Q.P.		0.0			-830.9			2.8	0.0	29.5	110.0	OK
Camp.	1.45	21.56	19.99	0.0	0.0	8063.6	51663.9	0.10	-6696.2	-47727.3	0.11					
				SLE Rare		4868.7			-773.9			2.0	10.9	382.3	121.8	
				SLE Freq.		286.2			-864.6			2.2	0.6	25.5	73.3	OK
				SLE Q.P.		0.0			-648.5			1.7	0.0	19.1	55.0	OK
60	2.50	25.45	25.45			5653.2	60823.1	0.11	-4790.6	-60555.1	0.12					
				SLE Rare		3286.7			-560.3			1.3	6.6	219.0	74.9	
				SLE Freq.		161.2			-623.4			1.4	0.3	16.8	41.7	OK
				SLE Q.P.		0.0			-466.0			1.1	0.0	12.5	31.2	OK
Trave Sez. 1 a _| 55x70x40x45 [cm] Soppalco																
60	0.00	25.45	25.45			5022.1	60823.1	0.11	-4291.8	-60555.1	0.12					
				SLE Rare		3286.7			-560.3			1.3	6.6	219.0	74.9	
				SLE Freq.		161.2			-623.4			1.4	0.3	16.8	41.7	OK
				SLE Q.P.		0.0			-466.0			1.1	0.0	12.5	31.2	OK

Camp.	1.25	24.37	19.63	0.0	0.0	3037.0	58258.7	0.11	-2722.3	46897.5	0.10						
				SLE Rare		1569.7			-328.4			0.8	3.4	109.6	38.6		
				SLE Freq.		25.5			-361.7			0.9	0.1	10.3	31.1	OK	
				SLE Q.P.		0.0			-268.0			0.7	0.0	7.6	23.1	OK	
61	2.50	25.45	25.45			420.8	60823.1	0.11	-653.9	60555.1	0.12						
				SLE Rare		0.0			-147.3			0.3	0.0	4.0	9.9		
				SLE Freq.		0.0			-110.3			0.3	0.0	3.0	7.4	OK	
				SLE Q.P.		0.0			-70.0			0.2	0.0	1.9	4.7	OK	
Trave Sez. 1 a _| 55x70x40x45 [cm] Soppalco																	
61	0.00	25.45	25.45			322.1	60823.1	0.11	-841.3	60555.1	0.12						
				SLE Rare		0.0			-147.3			0.3	0.0	4.0	9.9		
				SLE Freq.		0.0			-110.3			0.3	0.0	3.0	7.4	OK	
				SLE Q.P.		0.0			-70.0			0.2	0.0	1.9	4.7	OK	
Camp.	1.25	24.76	19.70	0.0	0.0	2384.9	59162.2	0.11	-3450.5	47050.9	0.10						
				SLE Rare		143.2			-1859.7			4.6	0.3	52.5	159.5		
				SLE Freq.		161.9			-245.6			0.6	0.3	11.1	21.1	OK	
				SLE Q.P.		127.5			0.0			0.0	0.3	8.8	3.1	OK	
62	2.49	25.45	25.45			3948.9	60823.1	0.11	-5428.7	60555.1	0.12						
				SLE Rare		374.1			-3572.2			8.2	0.7	96.0	239.1		
				SLE Freq.		422.2			-381.0			0.9	0.8	28.1	25.5	OK	
				SLE Q.P.		324.9			0.0			0.0	0.7	21.6	7.4	OK	
Trave Sez. 1 a _| 55x70x40x45 [cm] Soppalco																	
62	0.00	25.45	25.45			4470.0	60823.1	0.11	-6059.7	60555.1	0.12						
				SLE Rare		374.1			-3572.1			8.2	0.7	96.0	239.1		
				SLE Freq.		422.2			-381.0			0.9	0.8	28.1	25.5	OK	
				SLE Q.P.		324.9			0.0			0.0	0.7	21.6	7.4	OK	
Camp.	1.05	21.26	20.05	0.0	0.0	6375.7	50971.4	0.10	-8470.1	47878.4	0.11						
				SLE Rare		587.4			-5154.1			13.4	1.3	152.8	435.8		
				SLE Freq.		663.3			-506.0			1.3	1.5	52.8	42.8	OK	
				SLE Q.P.		507.4			0.0			0.0	1.1	40.4	12.7	OK	
63	2.10	12.15	12.72			7782.4	29538.4	0.09	10249.5	30629.5	0.10						
				SLE Rare		800.8			-6736.0			22.9	2.4	239.5	891.7		
				SLE Freq.		904.5			-631.0			2.1	2.7	118.7	83.5	OK	
				SLE Q.P.		689.8			0.0			0.0	2.0	90.5	21.0	OK	

Da	A	Dx	V_{Ed}	$V_{Rd,c}$	V_{Rcd}	V_{Rd}	Staffe

[m]	[m]	[m]	[kg]	[kg]	[kg]	[kg]	
Trave 59 60 Sez. 1 a _| 55x70x40x45 [cm] Soppalco							
0.58	2.50	1.92	43479.8	11227.3	83659.7	48385.5	ø 10 2br. 7.5'
Trave 60 61 Sez. 1 a _| 55x70x40x45 [cm] Soppalco							
0.00	2.50	2.50	48551.2	12973.6	83659.7	72578.2	ø 10 2br. 5.0'
Trave 61 62 Sez. 1 a _| 55x70x40x45 [cm] Soppalco							
0.00	2.49	2.49	48681.1	12987.9	83659.7	72578.2	ø 10 2br. 5.0'
Trave 62 63 Sez. 1 a _| 55x70x40x45 [cm] Soppalco							
0.00	1.92	1.92	43479.8	11227.3	83659.7	48385.5	ø 10 2br. 7.5'

Travata: ***23 Travata 65 66 67 68 69 70 71***

Nodo	x [m]	A_{fe} [cm²]	A_{fi} [cm²]	q_T [kg/m]	M_{rif} [kgm]	M_{de} [kgm]	M_{re} [kgm]	x/d	M_{di} [kgm]	M_{ri} [kgm]	x/d	σ_{be} [kg/cm²]	σ_{bi} [kg/cm²]	σ_{fe} [kg/cm²]	σ_{fi} [kg/cm²]	w mm
Trave Sez. 7 a L 50x70x35x45 [cm] L ridotta																
65	0.40	9.72	10.18			18630.3	23726.0	0.08	-5924.3	24555.1	0.10					
					SLE Rare	12734.5			0.0			0.0	44.0	2082.1	446.4	
					SLE Freq.	7413.3			0.0			0.0	25.6	1212.1	259.9	OK
					SLE Q.P.	2888.6			0.0			0.0	10.0	472.3	101.3	OK
Camp.	1.45	10.18	10.18	1.9	0.8	11538.6	24801.5	0.08	-4940.4	24555.6	0.09					
					SLE Rare	6074.9			-0.6			0.0	20.6	994.7	211.4	
					SLE Freq.	2695.2			-0.6			0.0	9.2	441.3	93.8	OK
					SLE Q.P.	456.4			-0.6			0.0	1.6	74.7	15.9	OK
66	2.50	10.18	10.18			1926.0	24801.5	0.08	-3604.7	24555.6	0.09					
					SLE Rare	0.0			-2431.0			9.8	0.0	106.0	401.3	
					SLE Freq.	0.0			-2357.7			9.5	0.0	102.8	389.2	OK
					SLE Q.P.	0.0			-1973.8			8.0	0.0	86.1	325.8	OK
Trave Sez. 7 a L 50x70x35x45 [cm] L ridotta																
66	0.01	10.18	10.18			2340.3	24801.5	0.08	-4305.0	24555.6	0.09					
					SLE Rare	1411.4			-1629.5			6.6	4.8	231.1	269.0	
					SLE Freq.	0.0			-1519.8			6.1	0.0	66.3	250.9	OK
					SLE Q.P.	0.0			-1582.1			6.4	0.0	69.0	261.2	OK
Camp.	1.25	9.59	5.53	1.9	0.8	0.0	23416.7	0.09	-6092.3	13585.4	0.08					
					SLE Rare	0.0			-3758.2			19.2	0.0	88.2	306.4	
					SLE Freq.	0.0			-3788.7			19.4	0.0	89.0	308.9	OK
					SLE Q.P.	0.0			-2371.7			12.1	0.0	55.7	193.3	OK
67	2.49	10.18	10.18			0.0	24801.5	0.08	-8451.3		0.09					

										24555.6						
					SLE Rare	0.0			-5884.5			23.8	0.0	256.7	971.3	
					SLE Freq.	0.0			-6071.8			24.5	0.0	264.9	1002.3	OK
					SLE Q.P.	0.0			-3159.0			12.8	0.0	137.8	521.4	OK
Trave Sez. 7 a L 50x70x35x45 [cm] L ridotta																
67	0.01	10.18	10.18			0.0	24801.5	0.08	-8797.2	24555.6	0.09					
					SLE Rare	0.0			-6135.6			24.8	0.0	267.6	1012.8	
					SLE Freq.	0.0			-6290.1			25.4	0.0	274.4	1038.3	OK
					SLE Q.P.	0.0			-3419.5			13.8	0.0	149.2	564.5	OK
Camp.	1.25	10.18	10.18	1.9	0.8	66.4	24801.5	0.08	-5844.0	24555.6	0.09					
					SLE Rare	0.0			-3636.6			14.7	0.0	158.6	600.3	
					SLE Freq.	0.0			-3630.0			14.7	0.0	158.3	599.2	OK
					SLE Q.P.	0.0			-1863.9			7.5	0.0	81.3	307.7	OK
68	2.49	10.18	10.18			2480.9	24801.5	0.08	-4986.2	24555.6	0.09					
					SLE Rare	0.0			-3309.2			13.4	0.0	144.3	546.2	
					SLE Freq.	0.0			-1287.1			5.2	0.0	56.1	212.5	OK
					SLE Q.P.	0.0			-305.9			1.2	0.0	13.3	50.5	OK
Trave Sez. 7 a L 50x70x35x45 [cm] L ridotta																
68	0.01	10.18	10.18			1977.1	24801.5	0.08	-4289.7	24555.6	0.09					
					SLE Rare	0.0			-2963.0			12.0	0.0	129.2	489.1	
					SLE Freq.	0.0			-2244.9			9.1	0.0	97.9	370.6	OK
					SLE Q.P.	0.0			-1115.7			4.5	0.0	48.7	184.2	OK
Camp.	1.05	14.14	11.63	1.9	0.8	7947.0	34125.5	0.10	-3393.3	27982.4	0.09					
					SLE Rare	3279.2			-1865.4			6.7	9.7	271.2	154.1	
					SLE Freq.	3229.3			-0.6			0.0	9.6	267.1	59.3	OK
					SLE Q.P.	2254.4			-0.6			0.0	6.7	186.4	41.4	OK
69	2.10	10.18	10.18			12351.5	24801.5	0.08	-2175.8	24555.6	0.09					
					SLE Rare	8511.6			-765.9			3.1	28.9	1393.6	296.2	
					SLE Freq.	8463.1			0.0			0.0	28.8	1385.7	294.5	OK
					SLE Q.P.	5626.4			0.0			0.0	19.1	921.2	195.8	OK
Trave Sez. 7 a L 50x70x35x45 [cm] L ridotta																
69	0.40	10.18	10.18			17295.2	24801.5	0.08	-5325.5	24555.6	0.09					
					SLE Rare	11813.2			0.0			0.0	40.1	1934.2	411.1	
					SLE Freq.	4251.4			0.0			0.0	14.4	696.1	147.9	OK
					SLE Q.P.	2429.3			0.0			0.0	8.3	397.8	84.5	OK
Camp.	1.45	17.01	17.52	1.9	0.8	9920.2	40901.4	0.10	-3342.6	41822.6	0.11					
					SLE Rare	4945.6			-0.6			0.0	12.8	489.8	140.7	

					SLE Freq.	1625.0			-0.6			0.0	4.2	160.9	46.2	OK
					SLE Q.P.	847.7			-0.6			0.0	2.2	84.0	24.1	OK
70	2.49	20.36	22.90			91.9	48772.3	0.10	-2709.7	54456.2	0.12					
					SLE Rare	0.0			-1920.1			5.1	0.0	60.5	143.3	
					SLE Freq.	0.0			-999.3			2.7	0.0	31.5	74.6	OK
					SLE Q.P.	0.0			-731.9			2.0	0.0	23.1	54.6	OK
Trave Sez. 7 a L 50x70x35x45 [cm] L ridotta																
70	0.01	20.36	22.90			130.7	48772.3	0.10	-2119.4	54456.2	0.12					
					SLE Rare	0.0			-542.6			1.5	0.0	17.1	40.5	
					SLE Freq.	0.0			-646.3			1.7	0.0	20.4	48.2	OK
					SLE Q.P.	0.0			-491.0			1.3	0.0	15.5	36.6	OK
Camp.	1.05	17.26	18.56	1.9	0.8	4713.5	41486.3	0.10	10125.2	44265.2	0.11					
					SLE Rare	0.0			-5422.3			16.1	0.0	186.2	497.1	
					SLE Freq.	0.0			-1302.6			3.9	0.0	44.7	119.4	OK
					SLE Q.P.	0.0			-382.8			1.1	0.0	13.1	35.1	OK
71	2.10	9.72	12.72			8093.1	23723.9	0.08	16025.4	30529.6	0.11					
					SLE Rare	50.7			10744.6			40.6	0.2	434.5	1431.1	
					SLE Freq.	65.9			-2079.6			7.9	0.2	84.1	277.0	OK
					SLE Q.P.	0.0			-272.6			1.0	0.0	11.0	36.3	OK

Da [m]	A [m]	Dx [m]	V_{Ed} [kg]	$V_{Rd,c}$ [kg]	V_{Rcd} [kg]	V_{Rd} [kg]	Staffe
Trave 65 66 Sez. 7 a L 50x70x35x45 [cm] L ridotta							
0.58	1.22	0.64	23527.0	9534.8	73202.2	29031.3	ø 10 2br. 12.5'
1.22	1.86	0.64	23528.1	9534.8	73202.2	24192.7	ø 10 2br. 15.0'
1.86	2.50	0.64	23529.3	9534.8	73202.2	29031.3	ø 10 2br. 12.5'
Trave 66 67 Sez. 7 a L 50x70x35x45 [cm] L ridotta							
0.01	0.71	0.70	19832.0	9534.8	73202.2	29031.3	ø 10 2br. 12.5'
0.71	1.79	1.09	19830.9	7778.6	73202.2	24192.7	ø 10 2br. 15.0'
1.79	2.49	0.70	19832.0	9534.8	73202.2	29031.3	ø 10 2br. 12.5'
Trave 67 68 Sez. 7 a L 50x70x35x45 [cm] L ridotta							
0.01	0.71	0.70	19885.2	9534.8	73202.2	29031.3	ø 10 2br. 12.5'
0.71	1.79	1.08	19884.2	9534.8	73202.2	24192.7	ø 10 2br. 15.0'
1.79	2.49	0.70	19885.2	9534.8	73202.2	29031.3	ø 10 2br. 12.5'
Trave 68 69 Sez. 7 a L 50x70x35x45 [cm] L ridotta							
0.01	0.64	0.64	23529.5	9534.8	73202.2	29031.3	ø 10 2br. 12.5'
0.64	1.28	0.64	23528.4	9659.7	73202.2	24192.7	ø 10 2br. 15.0'

1.28	1.92	0.64	23529.2	9534.8	73202.2	29031.3	ø 10 2br. 12.5'
Trave 69 70 Sez. 7 a L 50x70x35x45 [cm] L ridotta							
0.58	2.49	1.91	37842.5	9534.8	73202.2	48385.5	ø 10 2br. 7.5'
Trave 70 71 Sez. 7 a L 50x70x35x45 [cm] L ridotta							
0.01	1.92	1.91	37863.9	10271.0	73202.2	48385.5	ø 10 2br. 7.5'

Travata: ***3 Travata 194 201 213***

Nodo	x [m]	A_{fe} [cm²]	A_{fi} [cm²]	q_T [kg/m]	M_{rif} [kgm]	M_{de} [kgm]	M_{re} [kgm]	x/d	M_{di} [kgm]	M_{ri} [kgm]	x/d	σ_{be} [kg/cm²]	σ_{bi} [kg/cm²]	σ_{fe} [kg/cm²]	σ_{fi} [kg/cm²]	w mm
Trave Sez. 4 a T 60x80x30x30 [cm] Tegoli **Afi < Afe/2**																
194	0.05	6.51	21.65			5942.8	18384.7	0.07	-377.3	-60175.5	0.12					
					SLE Rare	3909.7			-303.6			0.6	13.1	437.1	96.1	
					SLE Freq.	713.4			-285.7			0.6	2.4	79.8	17.5	OK
					SLE Q.P.	3831.0			0.0			0.0	12.9	428.3	94.2	OK
Camp.	2.03	12.72	25.45	0.0	0.0	3186.7	35446.9	0.08	-183.8	-70681.9	0.11					
					SLE Rare	1709.3			-119.6			0.2	4.3	193.3	48.2	
					SLE Freq.	296.8			-142.9			0.2	0.8	33.6	8.4	OK
					SLE Q.P.	1673.1			0.0			0.0	4.2	189.2	47.2	OK
201	4.00	25.45	25.45			92.1	70335.1	0.11	-741.3	-70869.2	0.09					
					SLE Rare	64.4			-491.1			0.8	0.1	8.8	28.1	
					SLE Freq.	0.0			-119.9			0.2	0.0	2.1	6.9	OK
					SLE Q.P.	0.0			-484.8			0.7	0.0	8.7	27.8	OK
Trave Sez. 4 a T 60x80x30x30 [cm] Tegoli **Afi < Afe/2**																
201	0.00	25.45	25.45			1327.4	70335.1	0.11	-133.3	-70869.2	0.09					
					SLE Rare	491.4			-64.5			0.1	1.0	28.4	12.5	
					SLE Freq.	120.0			-0.0			0.0	0.2	6.9	3.1	OK
					SLE Q.P.	485.1			0.0			0.0	1.0	28.0	12.3	OK
Camp.	4.62	12.72	25.45	0.0	0.0	9403.6	35446.9	0.08	-701.7	-70681.9	0.11					
					SLE Rare	5808.7			-510.3			0.9	14.8	656.9	164.0	
					SLE Freq.	1126.2			-346.1			0.6	2.9	127.4	31.8	OK
					SLE Q.P.	5699.4			0.0			0.0	14.5	644.6	160.9	OK
213	9.24	8.77	25.45			16894.2	24585.2	0.07	-1228.9	-70458.6	0.13					
					SLE Rare	11125.9			-956.1			1.7	31.9	1248.0	329.1	
					SLE Freq.	2132.3			-692.2			1.2	6.1	239.2	63.1	OK
					SLE Q.P.	10913.7			0.0			0.0	31.3	1224.2	322.8	OK

Da [m]	A [m]	Dx [m]	V_{Ed} [kg]	$V_{Rd,c}$ [kg]	V_{Rcd} [kg]	V_{Rd} [kg]	Staffe
Trave 194 201 Sez. 4 a T 60x80x30x30 [cm] Tegoli							
0.05	4.00	3.95	33017.4	11866.3	72309.5	41821.0	ø 10 2br. 10.0'
Trave 201 213 Sez. 4 a T 60x80x30x30 [cm] Tegoli							
0.00	0.77	0.77	15239.4	12522.6	72309.5	33456.8	ø 10 2br. 12.5'
0.77	8.16	7.38	15239.4	12522.6	72309.5	16728.4	ø 10 2br. 25.0'
8.16	8.93	0.77	15239.4	12522.6	72309.5	33456.8	ø 10 2br. 12.5'

Travata: ***35 Travata 184 185 186 187 188 189 190 191 192 193 194***

Nodo	x [m]	A_{fe} [cm²]	A_{fi} [cm²]	q_T [kg/m]	M_{rif} [kgm]	M_{de} [kgm]	M_{re} [kgm]	x/d	M_{di} [kgm]	M_{ri} [kgm]	x/d	σ_{be} [kg/cm²]	σ_{bi} [kg/cm²]	σ_{fe} [kg/cm²]	σ_{fi} [kg/cm²]	w mm
Trave Sez. 3 a |~ 55x70x30x40 [cm] Copertura																
184	0.40	9.72	10.18			4615.0	23398.3	0.10	-5726.6	-24880.2	0.08					
				SLE Rare		2926.4			-206.2			0.7	12.9	483.9	141.0	
				SLE Freq.		4.3			-1385.4			4.5	0.0	43.5	226.4	OK
				SLE Q.P.		309.2			0.0			0.0	1.4	51.1	14.9	OK
Camp.	1.57	10.18	10.18	0.1	0.0	4208.5	24469.9	0.10	-3093.9	-24879.8	0.08					
				SLE Rare		2715.5			0.0			0.0	11.8	449.7	129.9	
				SLE Freq.		1410.0			0.0			0.0	6.1	233.5	67.4	OK
				SLE Q.P.		995.4			0.0			0.0	4.3	164.8	47.6	OK
185	2.74	10.18	10.18			3770.1	24469.9	0.10	0.0	-24879.8	0.08					
				SLE Rare		2651.7			0.0			0.0	11.5	439.1	126.8	
				SLE Freq.		2958.5			0.0			0.0	12.9	489.9	141.5	OK
				SLE Q.P.		1681.8			0.0			0.0	7.3	278.5	80.4	OK
Trave Sez. 3 a |~ 55x70x30x40 [cm] Copertura																
185	0.01	10.18	10.18			4197.3	24469.9	0.10	0.0	-24879.8	0.08					
				SLE Rare		2931.7			0.0			0.0	12.7	485.5	140.2	
				SLE Freq.		3021.6			0.0			0.0	13.1	500.4	144.5	OK
				SLE Q.P.		1637.6			0.0			0.0	7.1	271.2	78.3	OK
Camp.	1.38	6.85	11.04	0.0	0.0	2223.1	16623.8	0.08	-868.9	-26903.9	0.09					
				SLE Rare		1300.3			0.0			0.0	6.4	109.4	64.7	
				SLE Freq.		1355.1			0.0			0.0	6.7	114.0	67.5	OK
				SLE Q.P.		765.7			0.0			0.0	3.8	64.4	38.1	OK
186	2.74	10.18	10.18			1389.9	24469.9	0.10	-3888.5	-24879.8	0.08					

					SLE Rare	0.0			-2346.2			7.6	0.0	76.6	383.3	
					SLE Freq.	768.7			-1810.0			5.9	3.3	127.3	295.7	OK
					SLE Q.P.	0.0			-106.1			0.3	0.0	3.5	17.3	OK
Trave Sez. 3 a |~ 55x70x30x40 [cm]																			
Copertura																			
186	0.01	10.18	10.18			1518.6	24469.9	0.10	-4074.4	24879.8	0.08								
					SLE Rare	31.5			-2474.2			8.0	0.1	80.8	404.2	
					SLE Freq.	740.3			-1878.1			6.1	3.2	122.6	306.8	OK
					SLE Q.P.	0.0			-281.1			0.9	0.0	9.2	45.9	OK
Camp.	1.38	10.18	10.18	0.0	0.0	3646.1	24469.9	0.10	0.0	24879.8	0.08								
					SLE Rare	2297.2			0.0			0.0	10.0	380.4	109.9	
					SLE Freq.	2662.0			0.0			0.0	11.6	440.8	127.3	OK
					SLE Q.P.	1825.8			0.0			0.0	7.9	302.3	87.3	OK
187	2.75	10.18	10.18			7643.8	24469.9	0.10	0.0	24879.8	0.08								
					SLE Rare	5538.9			0.0			0.0	24.1	917.2	264.9	
					SLE Freq.	6094.7			0.0			0.0	26.5	1009.3	291.5	OK
					SLE Q.P.	3932.6			0.0			0.0	17.1	651.3	188.1	OK
Trave Sez. 3 a |~ 55x70x30x40 [cm]																			
Copertura																			
187	0.01	10.18	10.18			7964.0	24469.9	0.10	0.0	24879.8	0.08								
					SLE Rare	5796.5			0.0			0.0	25.2	959.9	277.2	
					SLE Freq.	6398.8			0.0			0.0	27.8	1059.6	306.0	OK
					SLE Q.P.	4236.8			0.0			0.0	18.4	701.6	202.6	OK
Camp.	1.18	11.41	7.73	0.0	0.0	1702.9	27348.3	0.11	-7390.3	19099.4	0.07								
					SLE Rare	0.0			-3301.0			11.7	0.0	61.6	271.0	
					SLE Freq.	0.0			-1476.1			5.2	0.0	27.5	121.2	OK
					SLE Q.P.	0.0			-1716.2			6.1	0.0	32.0	140.9	OK
188	2.35	10.18	10.18			0.0	24469.9	0.10	-16367.7	24879.8	0.08								
					SLE Rare	0.0			-11871.3			38.5	0.0	387.7	1939.3	
					SLE Freq.	0.0			-7977.9			25.9	0.0	260.5	1303.3	OK
					SLE Q.P.	0.0			-7669.2			24.9	0.0	250.4	1252.8	OK
Trave Sez. 3 a |~ 55x70x30x40 [cm]																			
Copertura																			
188	0.40	10.18	10.18			18480.7	24469.9	0.10	0.0	24879.8	0.08								
					SLE Rare	12923.3			0.0			0.0	56.2	2140.1	618.0	
					SLE Freq.	12905.3			0.0			0.0	56.1	2137.1	617.2	OK
					SLE Q.P.	6814.8			0.0			0.0	29.6	1128.5	325.9	OK
Camp.	1.45	10.18	10.18	0.0	0.0	11617.0	24469.9	0.10	-987.0	24879.8	0.08								
					SLE Rare	6335.0			0.0			0.0	27.5	1049.1	303.0	

					SLE Freq.	5628.9			0.0			0.0	24.5	932.1	269.2	OK
					SLE Q.P.	2380.4			0.0			0.0	10.3	394.2	113.8	OK
189	2.50	10.18	10.18			2311.3	24469.9	0.10	-3098.8	24879.8	0.08					
					SLE Rare	17.8			-2236.1			7.2	0.1	73.0	365.3	
					SLE Freq.	0.0			-2029.7			6.6	0.0	66.3	331.6	OK
					SLE Q.P.	0.0			-2054.0			6.7	0.0	67.1	335.5	OK
Trave Sez. 3 a |~ 55x70x30x40 [cm] Copertura																
189	0.01	10.18	10.18			1251.4	24469.9	0.10	-4454.4	24879.8	0.08					
					SLE Rare	708.9			-1673.1			5.4	3.1	117.4	273.3	
					SLE Freq.	0.0			-1311.9			4.3	0.0	42.8	214.3	OK
					SLE Q.P.	0.0			-1676.0			5.4	0.0	54.7	273.8	OK
Camp.	1.25	9.86	12.93	0.0	0.0	0.0	23713.8	0.09	-14105.2	31364.3	0.09					
					SLE Rare	0.0			-8201.5			24.4	0.0	125.5	1063.3	
					SLE Freq.	0.0			-7929.6			23.6	0.0	121.4	1028.0	OK
					SLE Q.P.	0.0			-5219.7			15.5	0.0	79.9	676.7	OK
190	2.49	10.18	20.36			0.0	24473.2	0.09	-21418.0	48746.4	0.12					
					SLE Rare	0.0			-14866.7			37.6	0.0	427.9	1245.0	
					SLE Freq.	0.0			-14624.7			37.0	0.0	420.9	1224.8	OK
					SLE Q.P.	0.0			-8763.5			22.2	0.0	252.2	733.9	OK
Trave Sez. 3 a |~ 55x70x30x40 [cm] Copertura																
190	0.01	10.18	20.36			0.0	24473.2	0.09	-21121.4	48746.4	0.12					
					SLE Rare	0.0			-14642.0			37.0	0.0	421.4	1226.2	
					SLE Freq.	0.0			-14378.5			36.4	0.0	413.9	1204.2	OK
					SLE Q.P.	0.0			-8586.9			21.7	0.0	247.2	719.1	OK
Camp.	1.25	10.18	10.18	0.0	0.0	0.0	24469.9	0.10	-14420.1	24879.8	0.08					
					SLE Rare	0.0			-8604.9			27.9	0.0	281.0	1405.7	
					SLE Freq.	0.0			-8460.6			27.4	0.0	276.3	1382.1	OK
					SLE Q.P.	0.0			-5470.0			17.7	0.0	178.6	893.6	OK
191	2.49	10.18	10.18			0.0	24469.9	0.10	-7120.5	24879.8	0.08					
					SLE Rare	0.0			-4320.6			14.0	0.0	141.1	705.8	
					SLE Freq.	0.0			-2911.4			9.4	0.0	95.1	475.6	OK
					SLE Q.P.	0.0			-2353.2			7.6	0.0	76.8	384.4	OK
Trave Sez. 3 a |~ 55x70x30x40 [cm] Copertura																
191	0.01	10.18	10.18			14.9	24469.9	0.10	-6131.8	-	0.08					

										24879.8							
					SLE Rare	0.0			-4400.3			14.3	0.0	143.7	718.8	
					SLE Freq.	0.0			-3424.2			11.1	0.0	111.8	559.4	OK
					SLE Q.P.	0.0			-2717.3			8.8	0.0	88.7	443.9	OK
Camp.	1.05	14.14	15.99	0.0	0.0	7549.9	33793.4	0.10	-2188.9	-38582.3	0.10					
					SLE Rare	3351.2			-563.6			1.5	11.8	278.6	133.6	
					SLE Freq.	3204.6			0.0			0.0	11.3	266.4	127.8	OK
					SLE Q.P.	1293.8			0.0			0.0	4.6	107.5	51.6	OK
192	2.10	10.18	20.36			14474.7	24473.2	0.09	0.0	-48746.4	0.12					
					SLE Rare	9883.1			0.0			0.0	36.0	1620.5	377.9	
					SLE Freq.	9556.4			0.0			0.0	34.8	1566.9	365.4	OK
					SLE Q.P.	5304.9			0.0			0.0	19.3	869.8	202.8	OK
Trave Sez. 3 a |~ 55x70x30x40 [cm] Copertura																	
192	0.40	10.18	20.36			0.0	24473.2	0.09	-17618.8	-48746.4	0.12					
					SLE Rare	0.0			-13313.0			33.7	0.0	383.2	1114.9	
					SLE Freq.	0.0			-12210.7			30.9	0.0	351.5	1022.6	OK
					SLE Q.P.	0.0			-13664.4			34.6	0.0	393.3	1144.4	OK
Camp.	1.70	14.40	12.16	0.0	0.0	2897.0	34385.0	0.11	-8779.3	-29558.9	0.09					
					SLE Rare	60.7			-3864.3			11.2	0.2	114.8	529.8	
					SLE Freq.	0.0			-3280.1			9.5	0.0	97.4	449.7	OK
					SLE Q.P.	0.0			-5050.1			14.6	0.0	150.0	692.3	OK
193	2.99	20.36	20.36			13591.6	48408.4	0.12	-22.2	-48852.7	0.10					
					SLE Rare	9393.8			0.0			0.0	27.8	786.5	325.8	
					SLE Freq.	10652.4			0.0			0.0	31.5	891.9	369.4	OK
					SLE Q.P.	3564.2			0.0			0.0	10.5	298.4	123.6	OK
Trave Sez. 3 a |~ 55x70x30x40 [cm] Copertura																	
193	0.01	20.36	20.36			13366.2	48408.4	0.12	0.0	-48852.7	0.10					
					SLE Rare	9213.5			0.0			0.0	27.2	771.4	319.5	
					SLE Freq.	10520.2			0.0			0.0	31.1	880.8	364.8	OK
					SLE Q.P.	3280.7			0.0			0.0	9.7	274.7	113.8	OK
Camp.	0.98	18.08	17.18	0.0	0.0	8902.8	43044.7	0.12	0.0	-41388.1	0.10					
					SLE Rare	4796.2			0.0			0.0	15.4	452.1	179.6	
					SLE Freq.	5439.8			0.0			0.0	17.5	512.7	203.7	OK
					SLE Q.P.	1961.3			0.0			0.0	6.3	184.9	73.5	OK
194	1.95	10.18	10.18			2433.7	24469.9	0.10	-10.1	-24879.8	0.08					
					SLE Rare	530.8			0.0			0.0	2.3	87.9	25.4	

	SLE Freq.	591.0			0.0			0.0	2.6	97.9	28.3	OK
	SLE Q.P.	642.0			0.0			0.0	2.8	106.3	30.7	OK

Da [m]	A [m]	Dx [m]	V_{Ed} [kg]	$V_{Rd,c}$ [kg]	V_{Rcd} [kg]	V_{Rd} [kg]	Staffe
Trave 184 185 Sez. 3 a |~ 55x70x30x40 [cm] Copertura							
0.58	1.23	0.64	21049.3	8603.6	62744.8	29031.3	ø 10 2br. 12.5'
1.23	2.10	0.87	21049.3	8603.6	62744.8	24192.7	ø 10 2br. 15.0'
2.10	2.74	0.64	21049.3	8603.6	62744.8	29031.3	ø 10 2br. 12.5'
Trave 185 186 Sez. 3 a |~ 55x70x30x40 [cm] Copertura							
0.01	0.71	0.70	18017.4	8603.6	62744.8	29031.3	ø 10 2br. 12.5'
0.71	2.04	1.34	18017.4	8603.6	62744.8	18144.5	ø 10 2br. 20.0'
2.04	2.74	0.70	18017.4	8603.6	62744.8	29031.3	ø 10 2br. 12.5'
Trave 186 187 Sez. 3 a |~ 55x70x30x40 [cm] Copertura							
0.01	0.71	0.70	17995.5	8603.6	62744.8	29031.3	ø 10 2br. 12.5'
0.71	2.05	1.34	17995.5	8603.6	62744.8	18144.5	ø 10 2br. 20.0'
2.05	2.75	0.70	17995.5	8603.6	62744.8	29031.3	ø 10 2br. 12.5'
Trave 187 188 Sez. 3 a |~ 55x70x30x40 [cm] Copertura							
0.01	0.65	0.64	21079.1	8585.5	62744.8	29031.3	ø 10 2br. 12.5'
0.65	1.52	0.87	21079.1	7850.5	62744.8	24192.7	ø 10 2br. 15.0'
1.52	2.16	0.64	21079.1	8603.6	62744.8	29031.3	ø 10 2br. 12.5'
Trave 188 189 Sez. 3 a |~ 55x70x30x40 [cm] Copertura							
0.58	1.22	0.64	23524.1	8603.6	62744.8	29031.3	ø 10 2br. 12.5'
1.22	1.86	0.64	23524.1	8603.6	62744.8	24192.7	ø 10 2br. 15.0'
1.86	2.50	0.64	23524.1	8603.6	62744.8	29031.3	ø 10 2br. 12.5'
Trave 189 190 Sez. 3 a |~ 55x70x30x40 [cm] Copertura							
0.01	2.49	2.49	29415.9	8603.6	62744.8	36289.1	ø 10 2br. 10.0'
Trave 190 191 Sez. 3 a |~ 55x70x30x40 [cm] Copertura							
0.01	2.49	2.48	29495.0	8603.6	62744.8	36289.1	ø 10 2br. 10.0'
Trave 191 192 Sez. 3 a |~ 55x70x30x40 [cm] Copertura							
0.01	1.92	1.92	34900.9	8603.6	62744.8	36289.1	ø 10 2br. 10.0'
Trave 192 193 Sez. 3 a |~ 55x70x30x40 [cm] Copertura							
0.59	2.99	2.41	37440.7	8603.6	62744.8	48385.5	ø 10 2br. 7.5'
Trave 193 194 Sez. 3 a |~ 55x70x30x40 [cm] Copertura							
0.01	1.95	1.94	37699.9	8603.6	62744.8	48385.5	ø 10 2br. 7.5'

Travata: ***36 Travata 205 206 207 208 209 210 211 212 213***

Nodo	x [m]	A_{fe} [cm²]	A_{fi} [cm²]	q_T [kg/m]	M_{rif} [kgm]	M_{de} [kgm]	M_{re} [kgm]	x/d	M_{di} [kgm]	M_{ri} [kgm]	x/d	σ_{be} [kg/cm²]	σ_{bi} [kg/cm²]	σ_{fe} [kg/cm²]	σ_{fi} [kg/cm²]	w mm
Trave Sez. 13 a |~ 65x70x43x40 [cm] Copertura																
205	0.40	12.15	12.72			22617.7	29341.1	0.09	0.0	-31041.8	0.08					
				SLE Rare		15546.8			0.0			0.0	51.5	2050.7	552.5	
				SLE Freq.		15230.2			0.0			0.0	50.4	2008.9	541.2	OK
				SLE Q.P.		8233.2			0.0			0.0	27.3	1086.0	292.6	OK
Camp.	2.95	12.72	12.72	0.1	0.0	5309.0	30681.8	0.09	-4474.2	-31041.3	0.08					
				SLE Rare		2134.4			-1129.8			3.0	7.0	282.0	147.9	
				SLE Freq.		0.0			-1180.3			3.1	0.0	32.0	154.5	OK
				SLE Q.P.		104.8			-27.0			0.1	0.3	13.8	3.7	OK
206	5.50	25.45	25.45			0.0	60608.7	0.11	-25204.4	-61000.1	0.10					
				SLE Rare		0.0			-17116.3			31.8	0.0	355.5	1137.0	
				SLE Freq.		0.0			-17060.4			31.7	0.0	354.4	1133.3	OK
				SLE Q.P.		0.0			-8077.4			15.0	0.0	167.8	536.5	OK
Trave Sez. 13 a |~ 65x70x43x40 [cm] Copertura																
206	0.00	25.45	25.45			0.0	60608.7	0.11	-25180.0	-61000.1	0.10					
				SLE Rare		0.0			-17087.2			31.7	0.0	354.9	1135.0	
				SLE Freq.		0.0			-16949.3			31.5	0.0	352.1	1125.9	OK
				SLE Q.P.		0.0			-8109.3			15.1	0.0	168.4	538.7	OK
Camp.	2.55	12.72	12.72	0.0	0.0	516.2	30681.8	0.09	-7142.2	-31041.3	0.08					
				SLE Rare		0.0			-4088.8			10.9	0.0	110.9	535.1	
				SLE Freq.		0.0			-2937.2			7.8	0.0	79.7	384.4	OK
				SLE Q.P.		0.0			-2541.1			6.8	0.0	68.9	332.5	OK
207	5.10	12.72	25.45			16625.2	30681.3	0.09	0.0	-60845.7	0.13					
				SLE Rare		11060.6			0.0			0.0	30.7	1448.6	316.9	
				SLE Freq.		11718.7			0.0			0.0	32.5	1534.8	335.7	OK
				SLE Q.P.		3027.1			0.0			0.0	8.4	396.4	86.7	OK
Trave Sez. 13 a |~ 65x70x43x40 [cm] Copertura																
207	0.40	12.72	25.45			11463.6	30681.3	0.09	-934.3	-60845.7	0.13					
				SLE Rare		7767.5			0.0			0.0	21.6	1017.3	222.5	
				SLE Freq.		7833.3			0.0			0.0	21.7	1025.9	224.4	OK

					SLE Q.P.	2667.4			0.0			0.0	7.4	349.3	76.4	OK
Camp.	1.45	21.57	20.01	0.0	0.0	8764.0	51481.7	0.11	-2756.7	48209.2	0.09					
					SLE Rare	5217.3			0.0			0.0	13.0	411.2	149.8	
					SLE Freq.	4188.3			0.0			0.0	10.5	330.1	120.2	OK
					SLE Q.P.	690.5			0.0			0.0	1.7	54.4	19.8	OK
208	2.50	12.72	12.72			5104.1	30681.8	0.09	-4100.9	31041.3	0.08					
					SLE Rare	2667.1			-1092.9			2.9	8.7	352.3	143.0	
					SLE Freq.	543.4			-469.2			1.3	1.8	71.8	61.4	OK
					SLE Q.P.	0.0			-1286.4			3.4	0.0	34.9	168.3	OK
Trave Sez. 13 a |~ 65x70x43x40 [cm] Copertura																
208	0.01	12.72	12.72			4694.7	30681.8	0.09	-4048.6	31041.3	0.08					
					SLE Rare	3037.8			-998.3			2.7	9.9	401.3	130.6	
					SLE Freq.	746.8			-398.5			1.1	2.4	98.7	52.2	OK
					SLE Q.P.	0.0			-1228.5			3.3	0.0	33.3	160.8	OK
Camp.	1.25	12.72	12.72	0.0	0.0	0.0	30681.8	0.09	-8691.4	31041.3	0.08					
					SLE Rare	0.0			-4912.7			13.1	0.0	133.3	642.9	
					SLE Freq.	0.0			-4455.3			11.9	0.0	120.9	583.0	OK
					SLE Q.P.	0.0			-3465.0			9.2	0.0	94.0	453.5	OK
209	2.49	12.72	12.72			0.0	30681.8	0.09	-13748.6	31041.3	0.08					
					SLE Rare	0.0			-9466.6			25.2	0.0	256.8	1238.8	
					SLE Freq.	0.0			-8922.9			23.8	0.0	242.0	1167.7	OK
					SLE Q.P.	0.0			-5701.6			15.2	0.0	154.7	746.1	OK
Trave Sez. 13 a |~ 65x70x43x40 [cm] Copertura																
209	0.01	12.72	12.72			0.0	30681.8	0.09	-14036.1	31041.3	0.08					
					SLE Rare	0.0			-9681.8			25.8	0.0	262.6	1267.0	
					SLE Freq.	0.0			-9138.0			24.4	0.0	247.9	1195.8	OK
					SLE Q.P.	0.0			-5902.9			15.7	0.0	160.1	772.5	OK
Camp.	1.25	18.91	16.22	0.0	0.0	510.5	45228.7	0.11	-8454.0	39271.9	0.09					
					SLE Rare	0.0			-4588.0			10.5	0.0	110.5	473.1	
					SLE Freq.	0.0			-4358.1			10.0	0.0	105.0	449.4	OK
					SLE Q.P.	0.0			-2909.4			6.7	0.0	70.1	300.0	OK
210	2.49	25.45	25.45			3500.7	60608.7	0.11	-4436.8	61000.1	0.10					
					SLE Rare	505.9			-2489.4			4.6	1.1	51.7	165.4	
					SLE Freq.	759.1			-13.2			0.0	1.7	50.8	19.7	OK
					SLE Q.P.	92.7			-8.5			0.0	0.2	6.2	2.4	OK
Trave Sez. 13 a |~ 65x70x43x40 [cm] Copertura																
210	0.01	25.45	25.45			2870.4	60608.7	0.11	-3675.4		0.10					

										61000.1						
					SLE Rare	241.0			-2432.1			4.5	0.5	50.5	161.6	
					SLE Freq.	477.6			-113.3			0.2	1.1	31.9	12.4	OK
					SLE Q.P.	8.1			-75.3			0.1	0.0	1.6	5.0	OK
Camp.	1.05	21.49	19.29	0.0	0.0	6830.6	51281.7	0.11	-1015.8	46512.1	0.09					
					SLE Rare	3876.9			0.0			0.0	9.8	307.0	112.5	
					SLE Freq.	4025.5			0.0			0.0	10.2	318.7	116.8	OK
					SLE Q.P.	2415.1			0.0			0.0	6.1	191.2	70.1	OK
211	2.10	12.72	12.72			10626.1	30681.8	0.09	0.0	31041.3	0.08					
					SLE Rare	7512.7			0.0			0.0	24.5	992.4	264.9	
					SLE Freq.	7573.3			0.0			0.0	24.7	1000.5	267.1	OK
					SLE Q.P.	4897.3			0.0			0.0	16.0	647.0	172.7	OK
Trave Sez. 13 a |~ 65x70x43x40 [cm] Copertura																
211	0.40	12.72	12.72			8456.1	30681.8	0.09	-2373.1	31041.3	0.08					
					SLE Rare	5814.0			0.0			0.0	18.9	768.0	205.0	
					SLE Freq.	2181.8			0.0			0.0	7.1	288.2	76.9	OK
					SLE Q.P.	2296.9			0.0			0.0	7.5	303.4	81.0	OK
Camp.	1.45	17.38	14.61	0.0	0.0	5340.9	41615.0	0.11	-1226.7	35481.0	0.09					
					SLE Rare	2921.0			0.0			0.0	8.4	197.9	54.5	
					SLE Freq.	1430.6			0.0			0.0	4.1	96.9	26.7	OK
					SLE Q.P.	1348.3			0.0			0.0	3.9	91.4	25.2	OK
212	2.49	12.72	12.72			1338.8	30681.8	0.09	-13.4	31041.3	0.08					
					SLE Rare	794.6			0.0			0.0	2.6	105.0	28.0	
					SLE Freq.	816.7			0.0			0.0	2.7	107.9	28.8	OK
					SLE Q.P.	399.7			0.0			0.0	1.3	52.8	14.1	OK
Trave Sez. 13 a |~ 65x70x43x40 [cm] Copertura																
212	0.01	12.72	12.72			1155.3	30681.8	0.09	-724.4	31041.3	0.08					
					SLE Rare	796.6			-0.5			0.0	2.6	105.2	28.1	
					SLE Freq.	792.5			0.0			0.0	2.6	104.7	27.9	OK
					SLE Q.P.	441.0			0.0			0.0	1.4	58.3	15.6	OK
Camp.	1.05	12.72	12.72	0.0	0.0	2316.5	30681.8	0.09	-4738.7	31041.3	0.08					
					SLE Rare	79.0			-2490.1			6.6	0.3	67.5	325.9	
					SLE Freq.	356.1			-190.1			0.5	1.2	47.0	24.9	OK
					SLE Q.P.	0.0			-493.6			1.3	0.0	13.4	64.6	OK
213	2.10	12.15	12.72			3342.4	29341.1	0.09	-7698.0	31041.8	0.08					
					SLE Rare	0.0			-5226.8			14.0	0.0	136.5	684.2	
					SLE Freq.	0.0			-1082.8			2.9	0.0	28.3	141.7	OK
					SLE Q.P.	0.0			-1428.2			3.8	0.0	37.3	187.0	OK

Da [m]	A [m]	Dx [m]	V_{Ed} [kg]	$V_{Rd,c}$ [kg]	V_{Rcd} [kg]	V_{Rd} [kg]	Staffe
Trave 205 206 Sez. 13 a |~ 65x70x43x40 [cm] Copertura							
0.59	1.27	0.67	17982.4	11781.9	89934.1	29031.3	ø 10 2br. 12.5'
1.27	4.82	3.56	17982.5	11781.9	89934.1	29031.3	ø 10 4br. 25.0'
4.82	5.50	0.67	17982.5	14844.2	89934.1	29031.3	ø 10 2br. 12.5'
Trave 206 207 Sez. 13 a |~ 65x70x43x40 [cm] Copertura							
0.00	0.67	0.67	23799.0	14844.2	89934.1	29031.3	ø 10 2br. 12.5'
0.67	4.24	3.56	23799.0	11781.9	89934.1	29031.3	ø 10 4br. 25.0'
4.24	4.91	0.67	23799.0	12093.1	89934.1	29031.3	ø 10 2br. 12.5'
Trave 207 208 Sez. 13 a |~ 65x70x43x40 [cm] Copertura							
0.58	2.50	1.92	43629.5	11781.9	89934.1	58062.5	ø 10 4br. 12.5'
Trave 208 209 Sez. 13 a |~ 65x70x43x40 [cm] Copertura							
0.01	2.49	2.49	24798.3	11781.9	89934.1	58062.5	ø 10 4br. 12.5'
Trave 209 210 Sez. 13 a |~ 65x70x43x40 [cm] Copertura							
0.01	2.49	2.48	36933.8	11781.9	89934.1	58062.5	ø 10 4br. 12.5'
Trave 210 211 Sez. 13 a |~ 65x70x43x40 [cm] Copertura							
0.01	1.92	1.92	43703.1	11781.9	89934.1	58062.5	ø 10 4br. 12.5'
Trave 211 212 Sez. 13 a |~ 65x70x43x40 [cm] Copertura							
0.58	2.49	1.91	29469.1	11781.9	89934.1	58062.5	ø 10 4br. 12.5'
Trave 212 213 Sez. 13 a |~ 65x70x43x40 [cm] Copertura							
0.01	0.64	0.64	29469.4	11781.9	89934.1	58062.5	ø 10 4br. 12.5'
0.64	1.28	0.63	29469.4	11781.9	89934.1	48385.5	ø 10 4br. 15.0'
1.28	1.92	0.64	29469.4	11781.9	89934.1	58062.5	ø 10 4br. 12.5'

Travata: ***4 Travata 204 205***

Nodo	x [m]	A_{fe} [cm²]	A_{fi} [cm²]	q_T [kg/m]	M_{rif} [kgm]	M_{de} [kgm]	M_{re} [kgm]	x/d	M_{di} [kgm]	M_{ri} [kgm]	x/d	σ_{be} [kg/cm²]	σ_{bi} [kg/cm²]	σ_{fe} [kg/cm²]	σ_{fi} [kg/cm²]	w mm
Trave Sez. 4 a T 60x80x30x30 [cm] Tegoli																
204	0.05	4.85	8.48			4475.4	13812.6	0.07	0.0	-24257.8	0.06					
				SLE Rare		3043.5			0.0			0.0	14.3	340.6	94.9	
				SLE Freq.		949.0			0.0			0.0	4.5	106.2	29.6	OK
				SLE Q.P.		2964.3			0.0			0.0	13.9	331.7	92.5	OK
Camp.	1.07	12.72	12.72	611.0	261.5	3315.2	35434.6	0.09	-259.4	-35940.8	0.07					
				SLE Rare		1871.7			-176.0			0.4	5.8	214.4	67.1	
				SLE Freq.		839.4			-176.0			0.4	2.6	96.2	30.1	OK
				SLE Q.P.		1754.9			-81.6			0.2	5.4	201.0	62.9	OK

205	2.10	12.72	12.72			1180.7	35434.6	0.09	0.0	-35940.8	0.07									
					SLE Rare	303.5			0.0			0.0	0.9	34.8	10.9					
					SLE Freq.	168.1			0.0			0.0	0.5	19.3	6.0	OK				
					SLE Q.P.	276.1			0.0			0.0	0.9	31.6	9.9	OK				

Da [m]	A [m]	Dx [m]	V_{Ed} [kg]	$V_{Rd,c}$ [kg]	V_{Rcd} [kg]	V_{Rd} [kg]	Staffe
Trave 204 205 Sez. 4 a T 60x80x30x30 [cm] Tegoli							
0.05	1.82	1.77	29297.5	8682.0	72309.5	33456.8	ø 10 2br. 12.5'

Travata: ***4 Travata 202 203 204***

Nodo	x [m]	A_{fe} [cm²]	A_{fi} [cm²]	q_T [kg/m]	M_{rif} [kgm]	M_{de} [kgm]	M_{re} [kgm]	x/d	M_{di} [kgm]	M_{ri} [kgm]	x/d	σ_{be} [kg/cm²]	σ_{bi} [kg/cm²]	σ_{fe} [kg/cm²]	σ_{fi} [kg/cm²]	w mm
Trave Sez. 4 a T 60x80x30x30 [cm] Tegoli																
202	0.05	17.57	12.12			4370.5	48656.2	0.12	-563.6	-34273.6	0.07					
				SLE Rare		1859.6			-395.0			0.8	5.2	156.3	60.4	
				SLE Freq.		0.0			-838.5			1.8	0.0	18.8	94.3	OK
				SLE Q.P.		2085.8			0.0			0.0	5.9	175.3	67.7	OK
Camp.	1.35	25.45	17.50	611.3	357.7	11170.9	70160.8	0.13	-355.5	-49069.3	0.08					
				SLE Rare		6289.2			-241.2			0.4	14.7	367.5	181.5	
				SLE Freq.		1847.4			-241.2			0.4	4.3	108.0	53.3	OK
				SLE Q.P.		6206.6			-111.8			0.2	14.5	362.7	179.1	OK
203	2.64	25.45	25.45			16832.5	70335.1	0.11	0.0	-70869.2	0.09					
				SLE Rare		11276.7			0.0			0.0	23.5	651.4	286.7	
				SLE Freq.		4822.2			0.0			0.0	10.0	278.6	122.6	OK
				SLE Q.P.		10706.6			0.0			0.0	22.3	618.5	272.2	OK
Trave Sez. 4 a T 60x80x30x30 [cm] Tegoli Area tirante a taglio insufficiente																
203	0.38	25.45	25.45			5965.5	70335.1	0.11	-1021.3	-70869.2	0.09					
				SLE Rare		4049.1			-608.7			0.9	8.4	233.9	102.9	
				SLE Freq.		0.0			-1362.1			2.1	0.0	24.4	78.0	OK
				SLE Q.P.		4360.5			0.0			0.0	9.1	251.9	110.9	OK
Camp.	1.31	25.45	24.27	611.1	199.7	5701.4	70322.7	0.11	-310.9	-67641.1	0.09					
				SLE Rare		3732.2			-134.2			0.2	7.9	215.9	96.6	
				SLE Freq.		522.5			-287.3			0.5	1.1	30.2	17.2	OK
				SLE Q.P.		3805.8			-62.2			0.1	8.1	220.2	98.5	OK
204	2.24	18.03	7.83			4945.9	49548.3	0.15	0.0	-	0.06					

										22455.7								
					SLE Rare	3121.9			0.0			0.0	9.4	258.4	70.9		
					SLE Freq.	932.0			0.0			0.0	2.8	77.2	21.2	OK	
					SLE Q.P.	3051.7			0.0			0.0	9.2	252.6	69.3	OK	

Da [m]	A [m]	Dx [m]	V_{Ed} [kg]	$V_{Rd,c}$ [kg]	V_{Rcd} [kg]	V_{Rd} [kg]	Staffe
Trave 202 203 Sez. 4 a T 60x80x30x30 [cm] Tegoli							
0.05	2.44	2.39	46306.5	9779.1	72309.5	55761.3	ø 10 2br. 7.5'
Trave 203 204 Sez. 4 a T 60x80x30x30 [cm] Tegoli							
0.55	2.24	1.69	65024.0	8452.5	72309.5	83641.9	ø 10 2br. 5.0'

Travata: ***40 Travata 22 25***

Nodo	x [m]	A_{fe} [cm²]	A_{fi} [cm²]	q_T [kg/m]	M_{rif} [kgm]	M_{de} [kgm]	M_{re} [kgm]	x/d	M_{di} [kgm]	M_{ri} [kgm]	x/d	σ_{be} [kg/cm²]	σ_{bi} [kg/cm²]	σ_{fe} [kg/cm²]	σ_{fi} [kg/cm²]	w mm
Trave Sez. 8 Rett. 80x50 [cm] Appoggio																
22	0.50	0.49	0.70			1766.0	986.0	0.02	-7.0	-1316.7	0.02					
				SLE Rare		1300.7			-5.4			0.1	27.2	191.8	13.1	
				SLE Freq.		1188.2			-5.4			0.1	24.8	175.2	12.0	OK
				SLE Q.P.		1300.8			-5.4			0.1	27.2	191.8	13.1	OK
Camp.	0.47	6.93	20.76	487.5	7.6	1766.0	12147.6	0.10	-6.2	-33923.3	0.16					
				SLE Rare		754.7			-4.8			0.0	3.9	103.1	13.2	
				SLE Freq.		689.0			-4.8			0.0	3.6	94.1	12.1	OK
				SLE Q.P.		754.8			-4.8			0.0	3.9	103.1	13.2	OK
25	0.45	7.71	25.08			1536.9	13393.3	0.10	0.0	-40572.0	0.18					
				SLE Rare		214.6			0.0			0.0	1.0	28.1	4.3	
				SLE Freq.		195.8			0.0			0.0	0.9	25.6	3.9	OK
				SLE Q.P.		214.6			0.0			0.0	1.0	28.1	4.3	OK

Da [m]	A [m]	Dx [m]	V_{Ed} [kg]	$V_{Rd,c}$ [kg]	V_{Rcd} [kg]	V_{Rd} [kg]	Staffe
Trave 22 25 Sez. 8 Rett. 80x50 [cm] Appoggio							
0.45	0.44	-0.01	5958.9	13681.8	116307.3	25225.3	ø 10 2br. 10.0'

Travata: ***42 Travata 23 26***

Nodo	x [m]	A_{fe} [cm²]	A_{fi} [cm²]	q_T [kg/m]	M_{rif} [kgm]	M_{de} [kgm]	M_{re} [kgm]	x/d	M_{di} [kgm]	M_{ri} [kgm]	x/d	σ_{be} [kg/cm²]	σ_{bi} [kg/cm²]	σ_{fe} [kg/cm²]	σ_{fi} [kg/cm²]	w mm
Trave Sez. 8 Rett. 80x50 [cm] Appoggio																
23	0.50	0.49	0.70			2068.1	986.0	0.02	-7.0	-1316.7	0.02					
					SLE Rare	1533.2			-5.4			0.1	32.0	226.1	15.5	
					SLE Freq.	1420.8			-5.4			0.1	29.7	209.5	14.3	OK
					SLE Q.P.	1533.1			-5.4			0.1	32.0	226.1	15.5	OK
Camp.	0.47	6.93	20.76	487.5	7.6	2068.1	12147.6	0.10	-6.2	-33923.3	0.16					
					SLE Rare	890.2			-4.8			0.0	4.6	121.6	15.6	
					SLE Freq.	824.7			-4.8			0.0	4.3	112.6	14.4	OK
					SLE Q.P.	890.1			-4.8			0.0	4.6	121.5	15.6	OK
26	0.45	7.71	25.08			1800.2	13393.3	0.10	0.0	-40572.0	0.18					
					SLE Rare	253.0			0.0			0.0	1.2	33.1	5.0	
					SLE Freq.	234.3			0.0			0.0	1.1	30.6	4.7	OK
					SLE Q.P.	252.9			0.0			0.0	1.2	33.1	5.0	OK

Da [m]	A [m]	Dx [m]	V_{Ed} [kg]	$V_{Rd,c}$ [kg]	V_{Rcd} [kg]	V_{Rd} [kg]	Staffe
Trave 23 26 Sez. 8 Rett. 80x50 [cm] Appoggio							
0.45	0.44	-0.01	6968.2	13681.8	116307.3	25225.3	ø 10 2br. 10.0'

Travata: ***42 Travata 1 7 8 12 13 17 18***

Nodo	x [m]	A_{fe} [cm²]	A_{fi} [cm²]	q_T [kg/m]	M_{rif} [kgm]	M_{de} [kgm]	M_{re} [kgm]	x/d	M_{di} [kgm]	M_{ri} [kgm]	x/d	σ_{be} [kg/cm²]	σ_{bi} [kg/cm²]	σ_{fe} [kg/cm²]	σ_{fi} [kg/cm²]	w mm
Trave di fondazione Sez. 2 Rett. 85x30 [cm] Cordolo_fondazione-2																
1	0.50	9.24	9.24			0.0	8667.9	0.17	-3057.7	-8667.9	0.17					
					SLE Rare	0.0			-2237.6			28.2	0.0	144.9	1071.8	
					SLE Freq.	0.0			-2167.4			27.3	0.0	140.3	1038.2	OK
					SLE Q.P.	0.0			-1340.5			16.9	0.0	86.8	642.1	OK
Camp.	1.65	9.24	9.24			1232.4	8667.9	0.17	0.0	-8667.9	0.17					
					SLE Rare	877.2			0.0			0.0	11.0	420.2	56.8	
					SLE Freq.	853.4			0.0			0.0	10.7	408.8	55.2	OK
					SLE Q.P.	826.9			0.0			0.0	10.4	396.1	53.5	OK
7	2.80	16.23	18.47			269.7	14367.9	0.21	-1363.4	-16184.4	0.22					
					SLE Rare	17.7			-923.9			8.4	0.2	60.6	228.4	
					SLE Freq.	5.6			-247.2			2.3	0.1	16.2	61.1	OK
					SLE Q.P.	0.0			-904.0			8.3	0.0	59.3	223.5	OK

Trave di fondazione Sez. 2 Rett. 85x30 [cm] Cordolo_fondazione-2																	
7	0.15	16.61	18.47			0.0	14677.0	0.21	-2052.8	-16184.2	-0.22						
					SLE Rare	0.0			-1433.4			13.0	0.0	93.5	354.4		
					SLE Freq.	0.0			-818.2			7.4	0.0	53.4	202.3	OK	
					SLE Q.P.	0.0			-1462.0			13.3	0.0	95.4	361.5	OK	
Camp.	0.60	12.16	21.13			1112.6	11063.4	0.19	-110.2	-18315.7	-0.25						
					SLE Rare	368.1			0.0			0.0	3.8	136.3	21.2		
					SLE Freq.	224.4			0.0			0.0	2.3	83.1	12.9	OK	
					SLE Q.P.	376.1			0.0			0.0	3.9	139.2	21.7	OK	
8	1.05	13.99	18.47			2501.4	12547.5	0.20	0.0	-16184.8	-0.22						
					SLE Rare	1739.4			0.0			0.0	17.3	464.3	107.1		
					SLE Freq.	945.3			0.0			0.0	9.4	252.3	58.2	OK	
					SLE Q.P.	1772.2			0.0			0.0	17.6	473.1	109.1	OK	
Trave di fondazione Sez. 2 Rett. 85x30 [cm] Cordolo_fondazione-2																	
8	0.00	13.99	18.47			109.0	12547.5	0.20	-2177.2	-16184.8	-0.22						
					SLE Rare	0.0			-1443.2			13.4	0.0	80.8	356.6		
					SLE Freq.	0.0			-319.7			3.0	0.0	17.9	79.0	OK	
					SLE Q.P.	0.0			-1451.0			13.5	0.0	81.3	358.5	OK	
Camp.	0.88	9.24	9.24			353.0	8667.9	0.17	-68.0	-8667.9	0.17						
					SLE Rare	228.5			0.0			0.0	2.9	109.4	14.8		
					SLE Freq.	252.0			0.0			0.0	3.2	120.7	16.3	OK	
					SLE Q.P.	146.1			0.0			0.0	1.8	70.0	9.5	OK	
12	1.75	16.23	18.47			992.8	14367.9	0.21	-648.1	-16184.4	-0.22						
					SLE Rare	587.7			-462.6			4.2	5.5	164.6	114.4		
					SLE Freq.	0.0			-597.0			5.5	0.0	39.2	147.6	OK	
					SLE Q.P.	570.7			0.0			0.0	5.4	159.9	35.8	OK	
Trave di fondazione Sez. 2 Rett. 85x30 [cm] Cordolo_fondazione-2																	
12	0.15	16.23	18.47			505.8	14367.9	0.21	-163.6	-16184.4	-0.22						
					SLE Rare	212.4			-53.9			0.5	2.0	59.5	13.3		
					SLE Freq.	15.4			-152.0			1.4	0.1	10.0	37.6	OK	
					SLE Q.P.	210.6			0.0			0.0	2.0	59.0	13.2	OK	
Camp.	1.35	9.24	9.24			1179.6	8667.9	0.17	0.0	-8667.9	0.17						
					SLE Rare	839.0			0.0			0.0	10.6	401.9	54.3		
					SLE Freq.	873.4			0.0			0.0	11.0	418.4	56.5	OK	
					SLE Q.P.	734.6			0.0			0.0	9.2	351.9	47.6	OK	
13	2.55	16.23	18.47			0.0	14367.9	0.21	-	-	-0.22						

									2973.3	16184.4							
				SLE Rare		0.0			-2205.2			20.1	0.0	144.7	545.1		
				SLE Freq.		0.0			-2159.9			19.7	0.0	141.7	533.9	OK	
				SLE Q.P.		0.0			-2112.1			19.3	0.0	138.6	522.1	OK	
Trave di fondazione Sez. 2 Rett. 85x30 [cm] Cordolo_fondazione-2																	
13	0.40	16.23	18.47			0.0	14367.9	0.21	-2035.8	-16184.4	0.22						
				SLE Rare		0.0			-1505.8			13.8	0.0	98.8	372.2		
				SLE Freq.		0.0			-1483.5			13.5	0.0	97.3	366.7	OK	
				SLE Q.P.		0.0			-1255.2			11.5	0.0	82.4	310.3	OK	
Camp.	1.35	9.24	9.24			1157.8	8667.9	0.17	0.0	-8667.9	0.17						
				SLE Rare		844.0			0.0			0.0	10.6	404.3	54.6		
				SLE Freq.		837.2			0.0			0.0	10.5	401.0	54.2	OK	
				SLE Q.P.		794.9			0.0			0.0	10.0	380.8	51.5	OK	
17	2.30	16.61	18.47			72.5	14676.9	0.21	-976.9	-16184.2	0.22						
				SLE Rare		0.0			-668.8			6.1	0.0	43.6	165.4		
				SLE Freq.		0.0			-531.7			4.8	0.0	34.7	131.4	OK	
				SLE Q.P.		0.0			-652.1			5.9	0.0	42.6	161.2	OK	
Trave di fondazione Sez. 2 Rett. 85x30 [cm] Cordolo_fondazione-2																	
17	0.15	16.23	18.47			1533.9	14367.9	0.21	-253.4	-16184.4	0.22						
				SLE Rare		782.6			-105.7			1.0	7.4	219.2	49.1		
				SLE Freq.		103.6			-190.7			1.7	1.0	29.0	47.2	OK	
				SLE Q.P.		749.0			0.0			0.0	7.0	209.8	47.0	OK	
Camp.	1.05	9.24	9.24			1849.2	8667.9	0.17	0.0	-8667.9	0.17						
				SLE Rare		1149.8			0.0			0.0	14.5	550.8	74.4		
				SLE Freq.		977.3			0.0			0.0	12.3	468.1	63.3	OK	
				SLE Q.P.		1164.0			0.0			0.0	14.7	557.6	75.4	OK	
18	1.95	9.24	9.24			0.0	8667.9	0.17	-4886.8	-8667.9	0.17						
				SLE Rare		0.0			-3363.5			42.3	0.0	217.8	1611.1		
				SLE Freq.		0.0			-2356.6			29.7	0.0	152.6	1128.8	OK	
				SLE Q.P.		0.0			-3366.3			42.4	0.0	217.9	1612.5	OK	

Da [m]	A [m]	Dx [m]	V_{Ed} [kg]	$V_{Rd,c}$ [kg]	V_{Rcd} [kg]	V_{Rd} [kg]	Staffe
Trave di fondazione 1 7 Sez. 2 Rett. 85x30 [cm] Cordolo_fondazione-2							
0.77	2.80	2.03	6397.1	10809.9	69376.3	14161.6	ø 10 4br. 20.0'
Trave di fondazione 7 8 Sez. 2 Rett. 85x30 [cm] Cordolo_fondazione-2							
0.15	1.05	0.90	6459.8	11847.8	69376.3	14161.6	ø 10 4br. 20.0'
Trave di fondazione 8 12 Sez. 2 Rett. 85x30 [cm] Cordolo_fondazione-2							
0.00	1.75	1.75	3779.5	10809.9	69376.3	14161.6	ø 10 4br. 20.0'
Trave di fondazione 12 13 Sez. 2 Rett. 85x30 [cm] Cordolo_fondazione-2							
0.15	2.37	2.22	6118.2	10809.9	69376.3	14161.6	ø 10 4br. 20.0'
Trave di fondazione 13 17 Sez. 2 Rett. 85x30 [cm] Cordolo_fondazione-2							
0.58	2.30	1.72	5589.9	10809.9	69376.3	14161.6	ø 10 4br. 20.0'
Trave di fondazione 17 18 Sez. 2 Rett. 85x30 [cm] Cordolo_fondazione-2							
0.15	1.69	1.54	10543.4	10809.9	69376.3	14161.6	ø 10 4br. 20.0'

Travata: ***43 Travata 5 9 14 19***

Nodo	x [m]	A_{fe} [cm²]	A_{fi} [cm²]	q_T [kg/m]	M_{rif} [kgm]	M_{de} [kgm]	M_{re} [kgm]	x/d	M_{di} [kgm]	M_{ri} [kgm]	x/d	σ_{be} [kg/cm²]	σ_{bi} [kg/cm²]	σ_{fe} [kg/cm²]	σ_{fi} [kg/cm²]	w mm
Trave di fondazione Sez. 1 Rett. 40x30 [cm] Cordolo_fondazione																
5	0.50	4.62	9.24			0.0	4307.5	0.18	-5115.9	-8049.7	0.24					
					SLE Rare	0.0			-3681.9			74.1	0.0	566.9	1822.7	
					SLE Freq.	0.0			-3780.2			76.1	0.0	582.1	1871.4	OK
					SLE Q.P.	0.0			-3421.6			68.9	0.0	526.9	1693.9	OK
Camp.	2.82	4.62	4.62			1226.4	4302.7	0.17	0.0	-4302.7	0.17					
					SLE Rare	860.3			0.0			0.0	22.4	826.6	119.5	
					SLE Freq.	883.4			0.0			0.0	23.0	848.8	122.7	OK
					SLE Q.P.	799.1			0.0			0.0	20.8	767.8	111.0	OK
9	5.15	9.07	9.24			0.0	7918.5	0.22	-104.8	-8054.2	0.22					
					SLE Rare	0.0			-76.4			1.4	0.0	10.2	37.9	
					SLE Freq.	0.0			-75.6			1.4	0.0	10.1	37.5	OK
					SLE Q.P.	0.0			-65.6			1.2	0.0	8.8	32.6	OK
Trave di fondazione Sez. 1 Rett. 40x30 [cm] Cordolo_fondazione																
9	0.00	9.24	9.24			692.0	8054.2	0.22	0.0	-8054.2	0.22					
					SLE Rare	485.2			0.0			0.0	9.0	240.7	64.7	
					SLE Freq.	487.4			0.0			0.0	9.0	241.8	65.0	OK

				SLE Q.P.	449.9			0.0			0.0	8.3	223.2	60.0	OK
Camp.	1.65	4.62	4.62		1334.4	4302.7	0.17	0.0	-4302.7	0.17					
				SLE Rare	997.0			0.0			0.0	25.9	957.9	138.5	
				SLE Freq.	990.0			0.0			0.0	25.7	951.1	137.5	OK
				SLE Q.P.	918.3			0.0			0.0	23.9	882.2	127.6	OK
14	3.30	9.53	9.24		0.0	8294.5	0.22	-4577.5	-8054.1	0.22					
				SLE Rare	0.0			-3460.6			63.6	0.0	457.8	1716.9	
				SLE Freq.	0.0			-3440.2			63.2	0.0	455.1	1706.7	OK
				SLE Q.P.	0.0			-3189.4			58.6	0.0	421.9	1582.3	OK
Trave di fondazione Sez. 1 Rett. 40x30 [cm] Cordolo_fondazione															
14	0.40	9.65	9.24		0.0	8391.0	0.22	-5025.8	-8054.1	0.22					
				SLE Rare	0.0			-3677.9			67.4	0.0	484.8	1824.7	
				SLE Freq.	0.0			-3667.9			67.3	0.0	483.5	1819.8	OK
				SLE Q.P.	0.0			-3439.9			63.1	0.0	453.4	1706.7	OK
Camp.	2.40	6.16	4.62		3195.5	5562.5	0.19	0.0	-4304.9	0.18					
				SLE Rare	2363.7			0.0			0.0	54.9	1723.7	350.9	
				SLE Freq.	2267.3			0.0			0.0	52.7	1653.3	336.5	OK
				SLE Q.P.	2316.0			0.0			0.0	53.8	1688.9	343.8	OK
19	4.40	6.16	13.85		0.0	5558.8	0.19	-7702.2	-11684.2	0.31					
				SLE Rare	0.0			-5499.7			94.3	0.0	808.0	1851.2	
				SLE Freq.	0.0			-5088.5			87.3	0.0	747.6	1712.8	OK
				SLE Q.P.	0.0			-5429.0			93.1	0.0	797.6	1827.4	OK

Da [m]	A [m]	Dx [m]	V_{Ed} [kg]	$V_{Rd,c}$ [kg]	V_{Rcd} [kg]	V_{Rd} [kg]	Staffe
Trave di fondazione 5 9 Sez. 1 Rett. 40x30 [cm] Cordolo_fondazione							
0.78	1.26	0.48	9091.6	5190.8	32647.7	9441.1	ø 10 2br. 15.0'
1.26	4.67	3.41	5041.6	5190.8	32647.7	7080.8	ø 10 2br. 20.0'
4.67	5.15	0.48	298.3	5705.1	32647.7	9441.1	ø 10 2br. 15.0'
Trave di fondazione 9 14 Sez. 1 Rett. 40x30 [cm] Cordolo_fondazione							
0.00	0.48	0.48	512.4	5763.6	32647.7	9441.1	ø 10 2br. 15.0'
0.48	2.63	2.15	4699.5	5190.8	32647.7	7080.8	ø 10 2br. 20.0'
2.63	3.11	0.48	8448.2	5428.0	32647.7	9441.1	ø 10 2br. 15.0'

Trave di fondazione 14 19 Sez. 1 Rett. 40x30 [cm] Cordolo_fondazione								
0.58	1.15	0.57	9305.7	5713.3	32647.7	14161.6	ø 10 2br. 10.0'
1.15	3.56	2.42	6496.9	5713.3	32647.7	7080.8	ø 10 2br. 20.0'
3.56	4.13	0.57	14045.5	5713.3	32647.7	14161.6	ø 10 2br. 10.0'

Travata: ***44 Travata 24 27***

Nodo	x [m]	A_{fe} [cm²]	A_{fi} [cm²]	q_T [kg/m]	M_{rif} [kgm]	M_{de} [kgm]	M_{re} [kgm]	x/d	M_{di} [kgm]	M_{ri} [kgm]	x/d	σ_{be} [kg/cm²]	σ_{bi} [kg/cm²]	σ_{fe} [kg/cm²]	σ_{fi} [kg/cm²]	w mm
Trave Sez. 8 Rett. 80x50 [cm] Appoggio Area tirante a taglio insufficiente																
24	0.50	0.49	0.70			325.1	986.0	0.02	-7.0	-1316.7	0.02					
					SLE Rare	250.0			-5.4			0.1	5.2	36.9	2.5	
					SLE Freq.	249.9			-5.4			0.1	5.2	36.9	2.5	OK
					SLE Q.P.	249.9			-5.4			0.1	5.2	36.9	2.5	OK
Camp.	0.47	6.93	20.76	487.5	7.6	325.1	12147.6	0.10	-6.2	-33923.3	0.16					
					SLE Rare	141.8			-4.8			0.0	0.7	19.4	2.5	
					SLE Freq.	141.7			-4.8			0.0	0.7	19.4	2.5	OK
					SLE Q.P.	141.8			-4.8			0.0	0.7	19.4	2.5	OK
27	0.45	7.71	25.08			280.9	13393.3	0.10	0.0	-40572.0	0.18					
					SLE Rare	39.5			0.0			0.0	0.2	5.2	0.8	
					SLE Freq.	39.4			0.0			0.0	0.2	5.2	0.8	OK
					SLE Q.P.	39.4			0.0			0.0	0.2	5.2	0.8	OK

Da [m]	A [m]	Dx [m]	V_{Ed} [kg]	$V_{Rd,c}$ [kg]	V_{Rcd} [kg]	V_{Rd} [kg]	Staffe
Trave 24 27 Sez. 8 Rett. 80x50 [cm] Appoggio							
0.45	0.44	-0.01	1155.5	13681.8	116307.3	25225.3	ø 10 2br. 10.0'

Travata: ***44 Travata 6 10 15 20***

Nodo	x [m]	A_{fe} [cm²]	A_{fi} [cm²]	q_T [kg/m]	M_{rif} [kgm]	M_{de} [kgm]	M_{re} [kgm]	x/d	M_{di} [kgm]	M_{ri} [kgm]	x/d	σ_{be} [kg/cm²]	σ_{bi} [kg/cm²]	σ_{fe} [kg/cm²]	σ_{fi} [kg/cm²]	w mm
Trave di fondazione Sez. 1 Rett. 40x30 [cm] Cordolo_fondazione																
6	0.50	4.62	10.78			0.0	4308.3	0.18	-6540.5	-9267.2	0.27					
					SLE Rare	0.0			-4732.6			90.6	0.0	730.9	2023.2	

				SLE Freq.	0.0			-4829.0			92.5	0.0	745.8	2064.4	OK
				SLE Q.P.	0.0			-4364.3			83.6	0.0	674.0	1865.8	OK
Camp.	2.82	4.62	4.62		1586.7	4302.7	0.17	0.0	-4302.7	0.17					
				SLE Rare	1120.9			0.0			0.0	29.1	1076.9	155.7	
				SLE Freq.	1143.1			0.0			0.0	29.7	1098.2	158.8	OK
				SLE Q.P.	1032.3			0.0			0.0	26.8	991.8	143.4	OK
10	5.15	9.07	9.24		0.0	7918.5	0.22	-237.1	-8054.2	0.22					
				SLE Rare	0.0			-175.9			3.3	0.0	23.6	87.3	
				SLE Freq.	0.0			-175.9			3.3	0.0	23.6	87.2	OK
				SLE Q.P.	0.0			-154.9			2.9	0.0	20.8	76.9	OK
Trave di fondazione Sez. 1 Rett. 40x30 [cm] Cordolo_fondazione															
10	0.00	9.24	9.24		524.1	8054.2	0.22	0.0	-8054.2	0.22					
				SLE Rare	380.6			0.0			0.0	7.0	188.8	50.8	
				SLE Freq.	386.9			0.0			0.0	7.1	191.9	51.6	OK
				SLE Q.P.	365.2			0.0			0.0	6.7	181.2	48.7	OK
Camp.	1.65	4.62	4.62		906.9	4302.7	0.17	0.0	-4302.7	0.17					
				SLE Rare	682.0			0.0			0.0	17.7	655.2	94.7	
				SLE Freq.	683.8			0.0			0.0	17.8	656.9	95.0	OK
				SLE Q.P.	661.1			0.0			0.0	17.2	635.2	91.8	OK
15	3.30	8.31	9.24		0.0	7301.9	0.21	-3155.7	-8054.3	0.22					
				SLE Rare	0.0			-2402.2			45.1	0.0	329.5	1191.1	
				SLE Freq.	0.0			-2412.3			45.3	0.0	330.9	1196.1	OK
				SLE Q.P.	0.0			-2326.0			43.7	0.0	319.0	1153.3	OK
Trave di fondazione Sez. 1 Rett. 40x30 [cm] Cordolo_fondazione															
15	0.40	8.11	9.24		0.0	7147.6	0.21	-3498.7	-8054.3	0.22					
				SLE Rare	0.0			-2576.4			48.5	0.0	355.4	1277.3	
				SLE Freq.	0.0			-2580.0			48.6	0.0	355.9	1279.1	OK
				SLE Q.P.	0.0			-2497.7			47.0	0.0	344.5	1238.3	OK
Camp.	2.40	4.62	4.62		2250.1	4302.7	0.17	0.0	-4302.7	0.17					
				SLE Rare	1683.1			0.0			0.0	43.7	1617.0	233.8	
				SLE Freq.	1652.4			0.0			0.0	42.9	1587.6	229.5	OK
				SLE Q.P.	1644.8			0.0			0.0	42.7	1580.3	228.5	OK
20	4.40	4.62	9.24		0.0	4307.5	0.18	-	-	-0.24					

									5439.8	8049.7							
					SLE Rare	0.0			-3940.3			79.3	0.0	606.7	1950.6		
					SLE Freq.	0.0			-3770.3			75.9	0.0	580.6	1866.5	OK	
					SLE Q.P.	0.0			-3801.0			76.5	0.0	585.3	1881.7	OK	

Da [m]	A [m]	Dx [m]	V_{Ed} [kg]	$V_{Rd,c}$ [kg]	V_{Rcd} [kg]	V_{Rd} [kg]	Staffe
Trave di fondazione 6 10 Sez. 1 Rett. 40x30 [cm] Cordolo_fondazione							
0.78	1.26	0.48	11624.0	5190.8	32647.7	14161.6	ø 10 2br. 10.0'
1.26	4.67	3.41	6450.2	5190.8	32647.7	7080.8	ø 10 2br. 20.0'
4.67	5.15	0.48	480.3	5705.1	32647.7	14161.6	ø 10 2br. 10.0'
Trave di fondazione 10 15 Sez. 1 Rett. 40x30 [cm] Cordolo_fondazione							
0.00	3.11	3.11	5808.2	5190.8	32647.7	7080.8	ø 10 2br. 20.0'
Trave di fondazione 15 20 Sez. 1 Rett. 40x30 [cm] Cordolo_fondazione							
0.58	1.03	0.46	6506.7	5350.4	32647.7	11329.3	ø 10 2br. 12.5'
1.03	3.68	2.65	5516.9	5190.8	32647.7	7080.8	ø 10 2br. 20.0'
3.68	4.13	0.46	9921.4	5190.8	32647.7	11329.3	ø 10 2br. 12.5'

Travata: ***45 Travata 11 16 21***

Nodo	x [m]	A_{fe} [cm²]	A_{fi} [cm²]	q_T [kg/m]	M_{rif} [kgm]	M_{de} [kgm]	M_{re} [kgm]	x/d	M_{di} [kgm]	M_{ri} [kgm]	x/d	σ_{be} [kg/cm²]	σ_{bi} [kg/cm²]	σ_{fe} [kg/cm²]	σ_{fi} [kg/cm²]	w mm
Trave di fondazione Sez. 1 Rett. 40x30 [cm] Cordolo_fondazione																
11	0.50	4.62	6.16			0.0	4304.9	0.18	-2941.2	-5562.5	0.19					
					SLE Rare	0.0			-2259.6			52.5	0.0	335.4	1647.8	
					SLE Freq.	0.0			-2266.3			52.7	0.0	336.4	1652.6	OK
					SLE Q.P.	0.0			-2048.2			47.6	0.0	304.0	1493.6	OK
Camp.	2.10	4.62	6.16			827.7	4304.9	0.18	0.0	-5562.5	0.19					
					SLE Rare	627.7			0.0			0.0	15.9	604.4	82.3	
					SLE Freq.	625.8			0.0			0.0	15.9	602.5	82.0	OK
					SLE Q.P.	561.2			0.0			0.0	14.2	540.3	73.6	OK
16	3.70	9.24	10.78			557.4	8053.7	0.22	0.0	-9292.9	0.24					
					SLE Rare	425.8			0.0			0.0	7.7	211.4	54.4	

					SLE Freq.	435.2			0.0			0.0	7.8	216.0	55.6	OK
					SLE Q.P.	412.1			0.0			0.0	7.4	204.6	52.6	OK
Trave di fondazione Sez. 1 Rett. 40x30 [cm] Cordolo_fondazione																			
16	0.00	9.24	10.78			0.8	8053.7	0.22	-87.1	9292.9	0.24								
					SLE Rare	0.0			-62.1			1.1	0.0	8.3	26.6	
					SLE Freq.	0.0			-44.6			0.8	0.0	6.0	19.1	OK
					SLE Q.P.	0.0			-56.7			1.0	0.0	7.6	24.3	OK
Camp.	2.20	4.62	4.62			1408.9	4302.7	0.17	0.0	4302.7	0.17								
					SLE Rare	1007.4			0.0			0.0	26.2	967.9	139.9	
					SLE Freq.	965.6			0.0			0.0	25.1	927.7	134.1	OK
					SLE Q.P.	997.9			0.0			0.0	25.9	958.7	138.6	OK
21	4.40	4.62	9.24			0.0	4307.5	0.18	5493.6	8049.7	0.24								
					SLE Rare	0.0			4028.6			81.1	0.0	620.3	1994.4	
					SLE Freq.	0.0			3873.1			78.0	0.0	596.4	1917.4	OK
					SLE Q.P.	0.0			3994.4			80.4	0.0	615.1	1977.4	OK

Da [m]	A [m]	Dx [m]	V_{Ed} [kg]	$V_{Rd,c}$ [kg]	V_{Rcd} [kg]	V_{Rd} [kg]	Staffe
Trave di fondazione 11 16 Sez. 1 Rett. 40x30 [cm] Cordolo_fondazione							
0.77	3.70	2.93	5392.1	5190.8	32647.7	7080.8	ø 10 2br. 20.0'
Trave di fondazione 16 21 Sez. 1 Rett. 40x30 [cm] Cordolo_fondazione							
0.00	0.48	0.48	430.1	5763.6	32647.7	11329.3	ø 10 2br. 12.5'
0.48	3.64	3.16	5476.4	5190.8	32647.7	7080.8	ø 10 2br. 20.0'
3.64	4.12	0.48	9886.0	5190.8	32647.7	11329.3	ø 10 2br. 12.5'

Travata: ***47 Travata 28 31***

Nodo	x [m]	A_{fe} [cm²]	A_{fi} [cm²]	q_T [kg/m]	M_{rif} [kgm]	M_{de} [kgm]	M_{re} [kgm]	x/d	M_{di} [kgm]	M_{ri} [kgm]	x/d	σ_{be} [kg/cm²]	σ_{bi} [kg/cm²]	σ_{fe} [kg/cm²]	σ_{fi} [kg/cm²]	w mm
Trave Sez. 8 Rett. 80x50 [cm] Appoggio **Area tirante a taglio insufficiente**																
28	0.05	6.41	19.90			519.6	11318.2	0.10	0.0	32577.7	0.15					
					SLE Rare	74.5			0.0			0.0	0.4	11.7	1.6	
					SLE Freq.	74.5			0.0			0.0	0.4	11.7	1.6	OK
					SLE Q.P.	74.3			0.0			0.0	0.4	11.6	1.5	OK

Camp.	0.08	6.78	18.78	487.5	7.6	598.9	11911.0	0.10	-6.2	-30839.0	0.15						
				SLE Rare		264.6			-4.8			0.0	1.4	41.5	5.4		
				SLE Freq.		264.6			-4.8			0.0	1.4	41.5	5.4	OK	
				SLE Q.P.		264.4			-4.8			0.0	1.4	41.5	5.4	OK	
31	0.10	7.16	19.82			598.9	12507.8	0.10	-7.0	-32461.9	0.15						
				SLE Rare		460.7			-5.4			0.0	2.4	72.3	9.8		
				SLE Freq.		460.6			-5.4			0.0	2.4	72.3	9.8	OK	
				SLE Q.P.		460.4			-5.4			0.0	2.4	72.3	9.8	OK	

Da [m]	A [m]	Dx [m]	V_{Ed} [kg]	$V_{Rd,c}$ [kg]	V_{Rcd} [kg]	V_{Rd} [kg]	Staffe
Trave 28 31 Sez. 8 Rett. 80x50 [cm] Appoggio **Vd 901721.3 > VR_{cd}116307.3**							
0.05	0.06	0.01	901721.3	16836.8	116307.3	100901.4	ø 10 4br. 5.0'

Travata: ***47 Travata 34 39 40 41 46 47***

Nodo	x [m]	A_{fe} [cm²]	A_{fi} [cm²]	q_T [kg/m]	M_{rif} [kgm]	M_{de} [kgm]	M_{re} [kgm]	x/d	M_{di} [kgm]	M_{ri} [kgm]	x/d	σ_{be} [kg/cm²]	σ_{bi} [kg/cm²]	σ_{fe} [kg/cm²]	σ_{fi} [kg/cm²]	w mm
Trave Sez. 1 a _| 55x70x40x45 [cm] Soppalco																
34	0.50	12.72	17.81			0.0	30878.7	0.08	-31140.6	-42557.9	0.12					
				SLE Rare		0.0			-21130.9			63.8	0.0	733.0	2022.1	
				SLE Freq.		0.0			-7744.6			23.4	0.0	268.6	741.1	OK
				SLE Q.P.		0.0			-21350.6			64.5	0.0	740.6	2043.2	OK
Camp.	1.65	12.72	14.90	0.0	0.0	0.0	30880.4	0.09	-18070.8	-35749.8	0.11					
				SLE Rare		0.0			-9495.0			30.4	0.0	340.2	1078.6	
				SLE Freq.		0.0			-2731.2			8.7	0.0	97.8	310.2	OK
				SLE Q.P.		0.0			-9521.2			30.5	0.0	341.1	1081.5	OK
39	2.80	12.72	12.72			3386.4	30881.5	0.09	-1054.6	-30630.5	0.10					
				SLE Rare		2470.6			0.0			0.0	7.1	324.6	74.7	
				SLE Freq.		2403.3			0.0			0.0	7.0	315.7	72.7	OK
				SLE Q.P.		2308.2			0.0			0.0	6.7	303.3	69.8	OK
Trave Sez. 1 a _| 55x70x40x45 [cm] Soppalco																
39	0.15	12.72	12.72			1754.6	30881.5	0.09	-2952.7	-30630.5	0.10					
				SLE Rare		1143.4			-1779.4			6.0	3.3	150.2	235.4	

					SLE Freq.	2035.3			0.0			0.0	5.9	267.4	61.6	OK
					SLE Q.P.	0.0			-1616.2			5.5	0.0	59.5	213.8	OK
Camp.	1.47	9.94	15.45	0.0	0.0	3356.8	24322.4	0.08	0.0	-36998.2	0.12					
					SLE Rare	1971.2			0.0			0.0	6.1	131.9	59.3	
					SLE Freq.	2119.8			0.0			0.0	6.5	141.8	63.8	OK
					SLE Q.P.	1701.3			0.0			0.0	5.2	113.8	51.2	OK
40	2.80	12.72	30.54			7071.3	30872.6	0.08	0.0	-70943.1	0.23					
					SLE Rare	4913.0			0.0			0.0	11.8	640.3	116.0	
					SLE Freq.	2696.4			0.0			0.0	6.5	351.4	63.7	OK
					SLE Q.P.	5018.9			0.0			0.0	12.1	654.1	118.5	OK
Trave Sez. 1 a _| 55x70x40x45 [cm] Soppalco																
40	0.15	12.72	30.54			2987.2	30872.6	0.08	0.0	-70943.1	0.23					
					SLE Rare	1801.8			0.0			0.0	4.3	234.8	42.6	
					SLE Freq.	2270.3			0.0			0.0	5.5	295.9	53.6	OK
					SLE Q.P.	1319.6			0.0			0.0	3.2	172.0	31.2	OK
Camp.	1.35	12.72	17.81	0.0	0.0	9557.1	30878.7	0.08	-1174.3	-42557.9	0.12					
					SLE Rare	5269.5			-355.2			1.1	14.4	690.2	147.8	
					SLE Freq.	574.7			-679.7			2.1	1.6	75.3	65.0	OK
					SLE Q.P.	5201.5			0.0			0.0	14.2	681.3	145.9	OK
41	2.55	12.72	17.81			14603.3	30878.7	0.08	-3150.2	-42557.9	0.12					
					SLE Rare	9349.2			-2367.2			7.1	25.6	1224.5	262.3	
					SLE Freq.	0.0			-3510.7			10.6	0.0	121.8	336.0	OK
					SLE Q.P.	9083.3			0.0			0.0	24.8	1189.7	254.8	OK
Trave Sez. 1 a _| 55x70x40x45 [cm] Soppalco																
41	0.40	12.72	17.81			0.0	30878.7	0.08	-27829.6	-42557.9	0.12					
					SLE Rare	0.0			-18951.2			57.2	0.0	657.4	1813.5	
					SLE Freq.	0.0			-6429.7			19.4	0.0	223.0	615.3	OK
					SLE Q.P.	0.0			-19107.4			57.7	0.0	662.8	1828.5	OK
Camp.	1.35	20.16	25.66	0.0	0.0	891.9	48399.6	0.10	-15203.9	-60997.3	0.13					
					SLE Rare	0.0			-6830.2			16.7	0.0	158.6	456.1	
					SLE Freq.	0.0			-1623.5			4.0	0.0	37.7	108.4	OK
					SLE Q.P.	0.0			-6871.5			16.8	0.0	159.6	458.8	OK
46	2.30	12.72	12.72			7593.3	30881.5	0.09	0.0	-30630.5	0.10					
					SLE Rare	5290.9			0.0			0.0	15.3	695.1	160.1	
					SLE Freq.	3182.6			0.0			0.0	9.2	418.1	96.3	OK
					SLE Q.P.	5364.4			0.0			0.0	15.5	704.8	162.3	OK

Trave Sez. 1 a _| 55x70x40x45 [cm] Soppalco																		
46	0.15	12.72	12.72			7453.5	30881.5	0.09	0.0	30630.5	0.10							
					SLE Rare	3120.6			0.0			0.0	9.0	410.0	94.4			
					SLE Freq.	2718.7			0.0			0.0	7.9	357.2	82.2	OK		
					SLE Q.P.	3047.7			0.0			0.0	8.8	400.4	92.2	OK		
Camp.	1.05	12.72	12.72	0.0	0.0	18963.3	30881.5	0.09	0.0	30630.5	0.10							
					SLE Rare	10550.0			0.0			0.0	30.5	1386.0	319.2			
					SLE Freq.	2714.6			0.0			0.0	7.9	356.6	82.1	OK		
					SLE Q.P.	10566.6			0.0			0.0	30.6	1388.2	319.7	OK		
47	1.95	12.72	12.72			27168.1	30881.5	0.09	-305.1	30630.5	0.10							
					SLE Rare	18121.1			-178.0			0.6	52.4	2380.7	548.2			
					SLE Freq.	2750.0			-1151.3			3.9	8.0	361.3	152.3	OK		
					SLE Q.P.	18085.6			0.0			0.0	52.3	2376.1	547.1	OK		

Da [m]	A [m]	Dx [m]	V_{Ed} [kg]	$V_{Rd,c}$ [kg]	V_{Rcd} [kg]	V_{Rd} [kg]	Staffe
Trave 34 39 Sez. 1 a _| 55x70x40x45 [cm] Soppalco							
0.77	2.80	2.03	31930.2	11227.3	83659.7	48385.5	ø 10 2br. 7.5'
Trave 39 40 Sez. 1 a _| 55x70x40x45 [cm] Soppalco							
0.15	2.80	2.65	38424.4	11227.3	83659.7	48385.5	ø 10 2br. 7.5'
Trave 40 41 Sez. 1 a _| 55x70x40x45 [cm] Soppalco							
0.15	2.37	2.22	42425.7	12559.8	83659.7	72578.2	ø 10 2br. 5.0'
Trave 41 46 Sez. 1 a _| 55x70x40x45 [cm] Soppalco							
0.58	2.30	1.72	38652.3	11227.3	83659.7	72578.2	ø 10 2br. 5.0'
Trave 46 47 Sez. 1 a _| 55x70x40x45 [cm] Soppalco							
0.15	1.69	1.54	34173.3	11227.3	83659.7	48385.5	ø 10 2br. 7.5'

Travata: ***49 Travata 32 29***

Nodo	x [m]	A_{fe} [cm²]	A_{fi} [cm²]	q_T [kg/m]	M_{rif} [kgm]	M_{de} [kgm]	M_{re} [kgm]	x/d	M_{di} [kgm]	M_{ri} [kgm]	x/d	σ_{be} [kg/cm²]	σ_{bi} [kg/cm²]	σ_{fe} [kg/cm²]	σ_{fi} [kg/cm²]	w mm
Trave Sez. 8 Rett. 80x50 [cm] Appoggio **Area tirante a taglio insufficiente**																
32	0.40	7.16	19.82			901.5	12507.8	0.10	-7.0	32461.9	0.15					
					SLE Rare	693.4			-5.4			0.0	3.6	108.9	14.7	
					SLE Freq.	693.4			-5.4			0.0	3.6	108.9	14.7	OK

					SLE Q.P.	693.3			-5.4			0.0	3.6	108.8	14.7	OK
Camp.	0.42	6.78	18.78	487.5	7.6	901.5	11911.0	0.10	-6.2	-30839.0	0.15					
					SLE Rare	400.4			-4.8			0.0	2.1	62.8	8.1	
					SLE Freq.	400.3			-4.8			0.0	2.1	62.8	8.1	OK
					SLE Q.P.	400.2			-4.8			0.0	2.1	62.7	8.1	OK
29	0.45	6.41	19.90			783.3	11318.2	0.10	0.0	-32577.7	0.15					
					SLE Rare	113.2			0.0			0.0	0.6	17.7	2.4	
					SLE Freq.	113.1			0.0			0.0	0.6	17.7	2.4	OK
					SLE Q.P.	113.0			0.0			0.0	0.6	17.7	2.4	OK

Da [m]	A [m]	Dx [m]	V_{Ed} [kg]	$V_{Rd,c}$ [kg]	V_{Rcd} [kg]	V_{Rd} [kg]	Staffe
***Trave 32 29 Sez. 8 Rett. 80x50 [cm] Appoggio* Vd 901721.4 > VR_{cd}116307.3**							
0.44	0.45	0.01	901721.4	16836.8	116307.3	100901.4	ø 10 4br. 5.0'

Travata: ***5 Travata 186 206***

Nodo	x [m]	A_{fe} [cm²]	A_{fi} [cm²]	q_T [kg/m]	M_{rif} [kgm]	M_{de} [kgm]	M_{re} [kgm]	x/d	M_{di} [kgm]	M_{ri} [kgm]	x/d	σ_{be} [kg/cm²]	σ_{bi} [kg/cm²]	σ_{fe} [kg/cm²]	σ_{fi} [kg/cm²]	w mm
***Trave Sez. 4 a T 60x80x30x30 [cm] Tegoli* EC2 4.4.2.3. Fessurazione : tensione eccessiva barre di Intradosso**																
186	0.13	15.74	16.25			0.0	43698.2	0.09	-7583.1	-45623.9	0.08					
				SLE Rare		0.0			-1432.8			2.8	0.0	16.1	116.3	
				SLE Freq.		0.0			-1432.8			2.8	0.0	16.1	116.3	OK
				SLE Q.P.		0.0			-664.2			1.3	0.0	7.4	53.9	OK
Camp.	6.92	30.54	12.72	2445.7	28940.5	0.0	81423.8	0.27	-57875.0	-35930.8	0.07					
				SLE Rare		0.0			-39259.5			73.6	0.0	744.6	4399.9	
				SLE Freq.		0.0			-39259.5			73.6	0.0	744.6	4399.9	NON VERIFICATO
				SLE Q.P.		0.0			-18199.8			34.1	0.0	345.2	2039.7	NON VERIFICATO
206	13.71	17.00	11.95			0.0	47108.9	0.11	-6321.7	-33813.6	0.07					

	SLE Rare	0.0			-543.9			1.2	0.0	6.9	43.7		
	SLE Freq.	0.0			-543.9			1.2	0.0	6.9	43.7		OK
	SLE Q.P.	0.0			-252.1			0.5	0.0	3.2	20.3		OK

Da [m]	A [m]	Dx [m]	V_{Ed} [kg]	$V_{Rd,c}$ [kg]	V_{Rcd} [kg]	V_{Rd} [kg]	Staffe
Trave 186 206 Sez. 4 a T 60x80x30x30 [cm] Tegoli							
0.13	1.08	0.95	16502.7	10783.2	72309.5	33456.8	ø 10 2br. 12.5'
1.08	12.76	11.68	14389.6	9939.2	72309.5	16728.4	ø 10 2br. 25.0'
12.76	13.71	0.95	16704.2	9733.9	72309.5	33456.8	ø 10 2br. 12.5'

Travata: ***51 Travata 30 33***

Nodo	x [m]	A_{fe} [cm²]	A_{fi} [cm²]	q_T [kg/m]	M_{rif} [kgm]	M_{de} [kgm]	M_{re} [kgm]	x/d	M_{di} [kgm]	M_{ri} [kgm]	x/d	σ_{be} [kg/cm²]	σ_{bi} [kg/cm²]	σ_{fe} [kg/cm²]	σ_{fi} [kg/cm²]	w mm
Trave Sez. 8 Rett. 80x50 [cm] Appoggio **Area tirante a taglio insufficiente**																
30	0.05	6.41	19.90			281.2	11318.2	0.10	0.0	32577.7	0.15					
				SLE Rare		39.7			0.0			0.0	0.2	6.2	0.8	
				SLE Freq.		39.5			0.0			0.0	0.2	6.2	0.8	OK
				SLE Q.P.		39.7			0.0			0.0	0.2	6.2	0.8	OK
Camp.	0.08	6.78	18.78	487.5	7.6	325.3	11911.0	0.10	-6.2	30839.0	0.15					
				SLE Rare		142.0			-4.8			0.0	0.8	22.3	2.9	
				SLE Freq.		141.8			-4.8			0.0	0.8	22.2	2.9	OK
				SLE Q.P.		142.0			-4.8			0.0	0.8	22.3	2.9	OK
33	0.10	7.16	19.82			325.3	12507.8	0.10	-7.0	32461.9	0.15					
				SLE Rare		250.2			-5.4			0.0	1.3	39.3	5.3	
				SLE Freq.		250.0			-5.4			0.0	1.3	39.2	5.3	OK
				SLE Q.P.		250.2			-5.4			0.0	1.3	39.3	5.3	OK

Da [m]	A [m]	Dx [m]	V_{Ed} [kg]	$V_{Rd,c}$ [kg]	V_{Rcd} [kg]	V_{Rd} [kg]	Staffe
Trave 30 33 Sez. 8 Rett. 80x50 [cm] Appoggio **Vd 901721.3 > VR_{cd}116307.3**							
0.05	0.06	0.01	901721.3	16836.8	116307.3	100901.4	ø 10 4br. 5.0'

Travata: ***51 Travata 38 45 51***

Nodo	x [m]	A_{fe} [cm²]	A_{fi} [cm²]	q_T [kg/m]	M_{rif} [kgm]	M_{de} [kgm]	M_{re} [kgm]	x/d	M_{di} [kgm]	M_{ri} [kgm]	x/d	σ_{be} [kg/cm²]	σ_{bi} [kg/cm²]	σ_{fe} [kg/cm²]	σ_{fi} [kg/cm²]	w mm
Trave Sez. 1 a _| 55x70x40x45 [cm] Soppalco																
38	0.50	15.27	15.27			27510.4	36875.7	0.09	-862.9	-36617.6	0.10					
					SLE Rare	20648.3			0.0			0.0	54.4	2269.9	583.6	
					SLE Freq.	20515.6			0.0			0.0	54.0	2255.3	579.9	OK
					SLE Q.P.	7748.3			0.0			0.0	20.4	851.8	219.0	OK
Camp.	4.47	15.27	15.27	5940.0	29077.2	0.0	36875.7	0.09	-29077.2	-36617.6	0.10					
					SLE Rare	0.0			-21538.7			65.9	0.0	735.0	2383.4	
					SLE Freq.	0.0			-19923.3			61.0	0.0	679.9	2204.7	OK
					SLE Q.P.	0.0			-21538.7			65.9	0.0	735.0	2383.4	OK
45	8.45	30.54	27.99			53912.6	72771.4	0.12	0.0	-66556.9	0.11					
					SLE Rare	38492.7			0.0			0.0	71.3	2147.3	827.1	
					SLE Freq.	26825.5			0.0			0.0	49.7	1496.5	576.4	OK
					SLE Q.P.	40007.9			0.0			0.0	74.1	2231.9	859.7	OK
Trave Sez. 1 a _| 55x70x40x45 [cm] Soppalco																
45	0.40	30.54	27.99			13138.8	72771.4	0.12	-13857.1	-66556.9	0.11					
					SLE Rare	9738.9			-8038.4			17.0	18.0	543.3	488.5	
					SLE Freq.	10792.3			0.0			0.0	20.0	602.1	231.9	OK
					SLE Q.P.	0.0			-8038.4			17.0	0.0	199.1	488.5	OK
Camp.	2.40	15.27	12.72	5940.0	8913.7	0.0	36872.9	0.10	-8913.7	-30633.1	0.09					
					SLE Rare	0.0			-6602.8			21.5	0.0	232.2	871.4	
					SLE Freq.	0.0			-6107.5			19.9	0.0	214.8	806.1	OK
					SLE Q.P.	0.0			-6602.8			21.5	0.0	232.2	871.4	OK
51	4.40	17.81	12.72			32790.6	42847.0	0.11	0.0	-30633.8	0.09					
					SLE Rare	22285.0			0.0			0.0	57.3	2115.9	635.2	
					SLE Freq.	5968.7			0.0			0.0	15.3	566.7	170.1	OK
					SLE Q.P.	23333.9			0.0			0.0	60.0	2215.5	665.1	OK

Da [m]	A [m]	Dx [m]	V_{Ed} [kg]	$V_{Rd,c}$ [kg]	V_{Rcd} [kg]	V_{Rd} [kg]	Staffe
Trave 38 45 Sez. 1 a _| 55x70x40x45 [cm] Soppalco							
0.78	1.44	0.66	29741.4	11930.8	83659.7	36289.1	ø 10 2br. 10.0'
1.44	3.88	2.44	26795.0	11930.8	83659.7	29031.3	ø 10 2br. 12.5'
3.88	5.17	1.29	16648.3	11930.8	83659.7	18144.5	ø 10 2br. 20.0'
5.17	7.60	2.44	27544.3	11930.8	83659.7	29031.3	ø 10 2br. 12.5'

7.60	8.26	0.66	30490.6	14487.0	83659.7	36289.1	ø 10 2br. 10.0'
Trave 45 51 Sez. 1 a _| 55x70x40x45 [cm] Soppalco							
0.58	4.13	3.56	36261.0	11227.3	83659.7	36289.1	ø 10 2br. 10.0'

Travata: ***52 Travata 52 59 65***

Nodo	x [m]	A_{fe} [cm²]	A_{fi} [cm²]	q_T [kg/m]	M_{rif} [kgm]	M_{de} [kgm]	M_{re} [kgm]	x/d	M_{di} [kgm]	M_{ri} [kgm]	x/d	σ_{be} [kg/cm²]	σ_{bi} [kg/cm²]	σ_{fe} [kg/cm²]	σ_{fi} [kg/cm²]	w mm
Trave Sez. 1 a _| 55x70x40x45 [cm] Soppalco																
52	0.50	15.27	15.27			25187.3	36875.7	0.09	-3913.5	-36617.6	0.10					
					SLE Rare	18913.9			0.0			0.0	49.8	2079.3	534.6	
					SLE Freq.	18864.0			0.0			0.0	49.7	2073.8	533.2	OK
					SLE Q.P.	4434.0			0.0			0.0	11.7	487.4	125.3	OK
Camp.	4.47	15.27	15.27	5400.0	26433.8	0.0	36875.7	0.09	-26433.8	-36617.6	0.10					
					SLE Rare	0.0			-19580.6			59.9	0.0	668.2	2166.7	
					SLE Freq.	0.0			-18112.1			55.4	0.0	618.1	2004.2	OK
					SLE Q.P.	0.0			-19580.6			59.9	0.0	668.2	2166.7	OK
59	8.45	27.99	27.99			48066.9	66807.3	0.11	0.0	-66539.2	0.12					
					SLE Rare	34238.3			0.0			0.0	65.1	2076.9	746.3	
					SLE Freq.	23521.0			0.0			0.0	44.7	1426.8	512.7	OK
					SLE Q.P.	35411.8			0.0			0.0	67.3	2148.1	771.9	OK
Trave Sez. 1 a _| 55x70x40x45 [cm] Soppalco																
59	0.40	27.99	27.99			7054.0	66807.3	0.11	-15799.8	-66539.2	0.12					
					SLE Rare	5186.5			-10040.8			21.8	9.9	314.6	611.6	
					SLE Freq.	6164.2			0.0			0.0	11.7	373.9	134.4	OK
					SLE Q.P.	0.0			-10387.0			22.6	0.0	265.9	632.7	OK
Camp.	2.40	12.72	12.72	0.0	0.0	8395.7	30881.5	0.09	0.0	-30630.5	0.10					
					SLE Rare	3835.7			0.0			0.0	11.1	503.9	116.0	
					SLE Freq.	1788.6			0.0			0.0	5.2	235.0	54.1	OK
					SLE Q.P.	3954.7			0.0			0.0	11.4	519.6	119.6	OK
65	4.40	12.72	12.72			26863.1	30881.5	0.09	-3632.4	-30630.5	0.10					
					SLE Rare	17712.2			-2613.7			8.8	51.3	2327.0	535.8	
					SLE Freq.	641.4			-3513.7			11.9	1.9	129.4	464.9	OK

	SLE Q.P.	18296.4			0.0			0.0	52.9	2403.8	553.5	OK

Da [m]	A [m]	Dx [m]	V_{Ed} [kg]	$V_{Rd,c}$ [kg]	V_{Rcd} [kg]	V_{Rd} [kg]	Staffe
Trave 52 59 Sez. 1 a _| 55x70x40x45 [cm] Soppalco							
0.78	3.44	2.66	28218.2	11930.8	83659.7	29031.3	ø 10 2br. 12.5'
3.44	5.60	2.16	17401.2	11930.8	83659.7	18144.5	ø 10 2br. 20.0'
5.60	8.26	2.66	28219.4	11930.8	83659.7	29031.3	ø 10 2br. 12.5'
Trave 59 65 Sez. 1 a _| 55x70x40x45 [cm] Soppalco							
0.58	4.13	3.56	24359.4	11227.3	83659.7	29031.3	ø 10 2br. 12.5'

Travata: ***56 Travata 167 171***

Nodo	x [m]	A_{fe} [cm²]	A_{fi} [cm²]	q_T [kg/m]	M_{rif} [kgm]	M_{de} [kgm]	M_{re} [kgm]	x/d	M_{di} [kgm]	M_{ri} [kgm]	x/d	σ_{be} [kg/cm²]	σ_{bi} [kg/cm²]	σ_{fe} [kg/cm²]	σ_{fi} [kg/cm²]	w mm
Trave Sez. 8 Rett. 80x50 [cm] Appoggio																
167	0.50	0.49	0.70			2898.1	986.0	0.02	-7.0	-1316.7	0.02					
				SLE Rare		1998.3			-5.4			0.1	41.7	294.7	20.1	
				SLE Freq.		1546.4			-5.4			0.1	32.3	228.1	15.6	OK
				SLE Q.P.		1999.5			-5.4			0.1	41.8	294.9	20.2	OK
Camp.	0.47	6.95	20.85	487.5	7.6	2898.1	12189.3	0.10	-6.2	-34055.2	0.16					
				SLE Rare		1162.4			-4.8			0.0	6.0	158.8	20.4	
				SLE Freq.		898.0			-4.8			0.0	4.7	122.7	15.8	OK
				SLE Q.P.		1163.6			-4.8			0.0	6.0	159.0	20.5	OK
171	0.45	7.74	25.18			2524.1	13435.0	0.10	0.0	-40718.1	0.18					
				SLE Rare		332.3			0.0			0.0	1.6	43.5	6.6	
				SLE Freq.		255.5			0.0			0.0	1.2	33.4	5.1	OK
				SLE Q.P.		333.6			0.0			0.0	1.6	43.6	6.7	OK

Da [m]	A [m]	Dx [m]	V_{Ed} [kg]	$V_{Rd,c}$ [kg]	V_{Rcd} [kg]	V_{Rd} [kg]	Staffe
Trave 167 171 Sez. 8 Rett. 80x50 [cm] Appoggio							
0.45	0.44	-0.01	9723.7	13681.8	116307.3	25225.3	ø 10 2br. 10.0'

Travata: ***56 Travata 56 57 63 69***

Nodo	x	A_{fe}	A_{fi}	q_T	M_{rif}	M_{de}	M_{re}	x/d	M_{di}	M_{ri}	x/d	σ_{be}	σ_{bi}	σ_{fe}	σ_{fi}	w

	[m]	[cm²]	[cm²]	[kg/m]	[kgm]	[kgm]	[kgm]		[kgm]	[kgm]		[kg/cm²]	[kg/cm²]	[kg/cm²]	[kg/cm²]	mm
Trave Sez. 1 a _| 55x70x40x45 [cm] Soppalco																
56	0.62	12.72	12.72			5628.6	30881.5	0.09	-20320.6	-30630.5	0.10					
					SLE Rare	4128.7			-13170.8			44.4	11.9	542.4	1742.6	
					SLE Freq.	3526.2			-431.0			1.5	10.2	463.3	106.7	OK
					SLE Q.P.	0.0			-12341.2			41.6	0.0	454.5	1632.8	OK
Camp.	2.18	12.72	12.72	0.0	0.0	0.0	30881.5	0.09	-17526.7	-30630.5	0.10					
					SLE Rare	0.0			-11676.5			39.4	0.0	430.0	1544.9	
					SLE Freq.	0.0			-4422.0			14.9	0.0	162.8	585.0	OK
					SLE Q.P.	0.0			-11635.8			39.2	0.0	428.5	1539.5	OK
57	3.74	17.71	15.95			0.0	42618.1	0.10	-14326.5	-38236.1	0.10					
					SLE Rare	0.0			-10218.2			29.8	0.0	332.3	1081.1	
					SLE Freq.	0.0			-8413.0			24.6	0.0	273.6	890.1	OK
					SLE Q.P.	0.0			-10930.4			31.9	0.0	355.4	1156.4	OK
Trave Sez. 11 a Tr 55x70x25x45 [cm] T rovescia																
57	1.41	22.90	22.90			0.0	54838.3	0.10	-12760.2	-54305.0	0.12					
					SLE Rare	0.0			-9377.7			27.7	0.0	332.1	699.7	
					SLE Freq.	0.0			-8031.7			23.8	0.0	284.4	599.2	OK
					SLE Q.P.	0.0			-9848.6			29.1	0.0	348.8	734.8	OK
Camp.	3.10	11.77	10.18	0.0	0.0	11116.0	28640.0	0.09	-1019.3	-24386.9	0.10					
					SLE Rare	5164.1			0.0			0.0	15.8	732.8	164.7	
					SLE Freq.	2042.5			0.0			0.0	6.3	289.8	65.1	OK
					SLE Q.P.	4914.5			0.0			0.0	15.1	697.3	156.7	OK
63	4.80	20.36	20.36			27497.5	48852.7	0.10	0.0	-48319.7	0.12					
					SLE Rare	19408.9			0.0			0.0	43.9	1609.8	488.1	
					SLE Freq.	12077.7			0.0			0.0	27.3	1001.8	303.7	OK
					SLE Q.P.	19677.6			0.0			0.0	44.5	1632.1	494.8	OK
Trave Sez. 11 a Tr 55x70x25x45 [cm] T rovescia																
63	0.40	20.36	20.36			8552.8	48852.7	0.10	-10840.4	-48319.7	0.12					
					SLE Rare	6239.6			-6659.7			21.2	14.1	517.5	558.5	
					SLE Freq.	5660.6			0.0			0.0	12.8	469.5	142.4	OK
					SLE Q.P.	0.0			-6837.9			21.7	0.0	258.4	573.5	OK
Camp.	2.40	10.18	10.18	0.0	0.0	10659.4	24879.8	0.08	0.0	-24382.4	0.10					

						SLE Rare	5555.6			0.0			0.0	18.0	907.6	181.4	
						SLE Freq.	2086.1			0.0			0.0	6.8	340.8	68.1	OK
						SLE Q.P.	5651.7			0.0			0.0	18.3	923.3	184.6	OK
69	4.40	15.27	10.18				27044.4	36866.0	0.10	-5556.7	24390.6	0.09					
						SLE Rare	17771.0			-3962.4			16.9	49.6	1961.9	653.9	
						SLE Freq.	1091.5			-3255.2			13.9	3.0	151.9	537.2	OK
						SLE Q.P.	18141.3			0.0			0.0	50.7	2002.8	552.2	OK

Da [m]	A [m]	Dx [m]	V_{Ed} [kg]	$V_{Rd,c}$ [kg]	V_{Rcd} [kg]	V_{Rd} [kg]	Staffe
Trave 56 57 Sez. 1 a _| 55x70x40x45 [cm] Soppalco							
0.90	1.36	0.46	23485.0	11227.3	83659.7	29031.3	ø 10 2br. 12.5'
1.36	2.48	1.13	23485.0	11227.3	83659.7	24192.7	ø 10 2br. 15.0'
2.48	2.94	0.46	23485.0	11227.3	83659.7	29031.3	ø 10 2br. 12.5'
Trave 57 63 Sez. 11 a Tr 55x70x25x45 [cm] T rovescia							
2.67	6.03	3.36	30474.1	7618.9	52287.3	36289.1	ø 10 2br. 10.0'
Trave 63 69 Sez. 11 a Tr 55x70x25x45 [cm] T rovescia							
0.58	1.20	0.62	21296.4	9563.0	52287.3	29031.3	ø 10 2br. 12.5'
1.20	3.51	2.31	21296.4	7618.9	52287.3	24192.7	ø 10 2br. 15.0'
3.51	4.13	0.62	21296.4	7618.9	52287.3	29031.3	ø 10 2br. 12.5'

Travata: ***57 Travata 176 180***

Nodo	x [m]	A_{fe} [cm²]	A_{fi} [cm²]	q_T [kg/m]	M_{rif} [kgm]	M_{de} [kgm]	M_{re} [kgm]	x/d	M_{di} [kgm]	M_{ri} [kgm]	x/d	σ_{be} [kg/cm²]	σ_{bi} [kg/cm²]	σ_{fe} [kg/cm²]	σ_{fi} [kg/cm²]	w mm
Trave Sez. 8 Rett. 80x50 [cm] Appoggio **Area tirante a taglio insufficiente**																
176	0.05	6.43	18.31			2518.3	11356.6	0.10	0.0	30116.0	0.14					
					SLE Rare	328.5			0.0			0.0	1.8	51.4	7.1	
					SLE Freq.	255.3			0.0			0.0	1.4	40.0	5.5	OK
					SLE Q.P.	327.3			0.0			0.0	1.8	51.2	7.0	OK
Camp.	0.10	7.18	18.23	487.5	12.9	4354.1	12546.7	0.10	-11.5	29992.5	0.14					
					SLE Rare	1659.3			-8.8			0.0	8.7	260.5	36.2	
					SLE Freq.	1286.1			-8.8			0.0	6.7	201.9	28.0	OK
					SLE Q.P.	1658.1			-8.8			0.0	8.6	260.3	36.1	OK
180	0.15	7.94	20.14			4356.4	13739.3	0.10	-9.0	32972.4	0.15					
					SLE Rare	3005.2			-7.0			0.0	14.8	473.0	71.1	
					SLE Freq.	2332.0			-7.0			0.0	11.5	367.0	55.2	OK

	SLE Q.P.	3004.0			-7.0			0.0	14.8	472.8	71.1	OK

Da [m]	A [m]	Dx [m]	V_{Ed} [kg]	$V_{Rd,c}$ [kg]	V_{Rcd} [kg]	V_{Rd} [kg]	Staffe
***Trave 176 180 Sez. 8 Rett. 80x50 [cm] Appoggio* Vd 443394.7 > VR_{cd}116307.3**							
0.05	0.07	0.02	443394.7	16446.4	116307.3	100901.4	ø 10 4br. 5.0'

Travata: ***57 Travata 58 64 71***

Nodo	x [m]	A_{fe} [cm²]	A_{fi} [cm²]	q_T [kg/m]	M_{rif} [kgm]	M_{de} [kgm]	M_{re} [kgm]	x/d	M_{di} [kgm]	M_{ri} [kgm]	x/d	σ_{be} [kg/cm²]	σ_{bi} [kg/cm²]	σ_{fe} [kg/cm²]	σ_{fi} [kg/cm²]	w mm
Trave Sez. 1 a _| 55x70x40x45 [cm] Soppalco																
58	0.39	11.99	15.27			1970.8	29159.5	0.08	-23661.9	-36600.7	0.11					
				SLE Rare		1395.9			-15692.6			50.3	4.0	534.6	1743.1	
				SLE Freq.		830.1			-2587.6			8.3	2.4	108.7	287.4	OK
				SLE Q.P.		0.0			-15750.5			50.5	0.0	536.5	1749.5	OK
Camp.	2.05	13.09	15.27	0.0	0.0	1283.4	31741.2	0.09	-14708.5	-36608.1	0.11					
				SLE Rare		811.2			-8512.3			26.9	2.3	301.7	944.2	
				SLE Freq.		503.7			-1361.0			4.3	1.4	64.3	151.0	OK
				SLE Q.P.		0.0			-8542.4			27.0	0.0	302.8	947.6	OK
64	3.70	25.45	27.99			452.9	60833.4	0.10	-3891.4	-66513.4	0.12					
				SLE Rare		226.5			-1331.9			3.0	0.4	35.3	81.3	
				SLE Freq.		177.3			-134.4			0.3	0.3	11.8	8.2	OK
				SLE Q.P.		0.0			-1334.3			3.0	0.0	35.3	81.5	OK
Trave Sez. 1 a _| 55x70x40x45 [cm] Soppalco																
64	0.00	25.45	27.99			451.0	60833.4	0.10	-2027.8	-66513.4	0.12					
				SLE Rare		226.5			-1331.9			3.0	0.4	35.3	81.3	
				SLE Freq.		177.3			-134.4			0.3	0.3	11.8	8.2	OK
				SLE Q.P.		0.0			-1334.3			3.0	0.0	35.3	81.5	OK
Camp.	2.20	12.72	12.72	0.0	0.0	14361.6	30881.5	0.09	-948.5	-30630.5	0.10					
				SLE Rare		8310.4			-558.6			1.9	24.0	1091.8	251.4	
				SLE Freq.		1512.8			-261.0			0.9	4.4	198.8	45.8	OK
				SLE Q.P.		8345.2			0.0			0.0	24.2	1096.4	252.5	OK
71	4.40	12.72	12.72			27023.8	30881.5	0.09	-1920.6	-30630.5	0.10					

	SLE Rare	17952.6			-1343.7			4.5	52.0	2358.6	543.1	
	SLE Freq.	3160.0			-699.2			2.4	9.1	415.2	95.6	OK
	SLE Q.P.	18024.6			0.0			0.0	52.2	2368.0	545.3	OK

Da [m]	A [m]	Dx [m]	V_{Ed} [kg]	$V_{Rd,c}$ [kg]	V_{Rcd} [kg]	V_{Rd} [kg]	Staffe
Trave 58 64 Sez. 1 a _| 55x70x40x45 [cm] Soppalco							
0.58	3.70	3.12	29468.5	11930.8	83659.7	36289.1	ø 10 2br. 10.0'
Trave 64 71 Sez. 1 a _| 55x70x40x45 [cm] Soppalco							
0.00	0.66	0.66	22135.2	14527.1	83659.7	29031.3	ø 10 2br. 12.5'
0.66	3.46	2.81	22135.2	11227.3	83659.7	24192.7	ø 10 2br. 15.0'
3.46	4.12	0.66	22135.2	11227.3	83659.7	29031.3	ø 10 2br. 12.5'

Travata: ***58 Travata 168 172***

Nodo	x [m]	A_{fe} [cm²]	A_{fi} [cm²]	q_T [kg/m]	M_{rif} [kgm]	M_{de} [kgm]	M_{re} [kgm]	x/d	M_{di} [kgm]	M_{ri} [kgm]	x/d	σ_{be} [kg/cm²]	σ_{bi} [kg/cm²]	σ_{fe} [kg/cm²]	σ_{fi} [kg/cm²]	w mm
Trave Sez. 8 Rett. 80x50 [cm] Appoggio																
168	0.50	0.49	0.70			3281.1	986.0	0.02	-7.0	-1316.7	0.02					
				SLE Rare		2293.5			-5.4			0.1	47.9	338.3	23.1	
				SLE Freq.		1845.6			-5.4			0.1	38.5	272.2	18.6	OK
				SLE Q.P.		2292.2			-5.4			0.1	47.9	338.1	23.1	OK
Camp.	0.47	6.95	20.85	487.5	7.6	3281.1	12189.3	0.10	-6.2	-34055.2	0.16					
				SLE Rare		1332.9			-4.8			0.0	6.9	182.1	23.4	
				SLE Freq.		1072.4			-4.8			0.0	5.6	146.5	18.9	OK
				SLE Q.P.		1331.6			-4.8			0.0	6.9	182.0	23.4	OK
172	0.45	7.74	25.18			2857.2	13435.0	0.10	0.0	-40718.1	0.18					
				SLE Rare		378.1			0.0			0.0	1.8	49.5	7.6	
				SLE Freq.		305.1			0.0			0.0	1.5	39.9	6.1	OK
				SLE Q.P.		376.8			0.0			0.0	1.8	49.3	7.5	OK

Da [m]	A [m]	Dx [m]	V_{Ed} [kg]	$V_{Rd,c}$ [kg]	V_{Rcd} [kg]	V_{Rd} [kg]	Staffe
Trave 168 172 Sez. 8 Rett. 80x50 [cm] Appoggio							
0.45	0.44	-0.01	11021.3	13681.8	116307.3	25225.3	ø 10 2br. 10.0'

Travata: ***59 Travata 177 181***

Nodo	x [m]	A_{fe} [cm²]	A_{fi} [cm²]	q_T [kg/m]	M_{rif} [kgm]	M_{de} [kgm]	M_{re} [kgm]	x/d	M_{di} [kgm]	M_{ri} [kgm]	x/d	σ_{be} [kg/cm²]	σ_{bi} [kg/cm²]	σ_{fe} [kg/cm²]	σ_{fi} [kg/cm²]	w mm
Trave Sez. 8 Rett. 80x50 [cm] Appoggio **Area tirante a taglio insufficiente**																
177	0.05	6.43	18.31			2863.3	11356.6	0.10	0.0	-30116.0	0.14					
					SLE Rare	382.1			0.0			0.0	2.1	59.8	8.2	
					SLE Freq.	305.2			0.0			0.0	1.7	47.8	6.6	OK
					SLE Q.P.	383.4			0.0			0.0	2.1	60.0	8.2	OK
Camp.	0.10	7.18	18.23	487.5	12.9	4943.4	12546.7	0.10	-11.5	-29992.5	0.14					
					SLE Rare	1912.6			-8.8			0.0	10.0	300.2	41.7	
					SLE Freq.	1535.7			-8.8			0.0	8.0	241.1	33.5	OK
					SLE Q.P.	1913.9			-8.8			0.0	10.0	300.4	41.7	OK
181	0.15	7.94	20.14			4945.9	13739.3	0.10	-9.0	-32972.4	0.15					
					SLE Rare	3458.1			-7.0			0.0	17.0	544.3	81.9	
					SLE Freq.	2781.2			-7.0			0.0	13.7	437.7	65.8	OK
					SLE Q.P.	3459.4			-7.0			0.0	17.0	544.5	81.9	OK

Da [m]	A [m]	Dx [m]	V_{Ed} [kg]	$V_{Rd,c}$ [kg]	V_{Rcd} [kg]	V_{Rd} [kg]	Staffe
Trave 177 181 Sez. 8 Rett. 80x50 [cm] Appoggio **Vd 443394.7 > VR_{cd}116307.3**							
0.05	0.07	0.02	443394.7	16446.4	116307.3	100901.4	ø 10 4br. 5.0'

Travata: ***60 Travata 169 173***

Nodo	x [m]	A_{fe} [cm²]	A_{fi} [cm²]	q_T [kg/m]	M_{rif} [kgm]	M_{de} [kgm]	M_{re} [kgm]	x/d	M_{di} [kgm]	M_{ri} [kgm]	x/d	σ_{be} [kg/cm²]	σ_{bi} [kg/cm²]	σ_{fe} [kg/cm²]	σ_{fi} [kg/cm²]	w mm
Trave Sez. 8 Rett. 80x50 [cm] Appoggio **Area tirante a taglio insufficiente**																
169	0.50	0.49	0.70			499.5	986.0	0.02	-7.0	-1316.7	0.02					
					SLE Rare	382.5			-5.4			0.1	8.0	56.4	3.9	
					SLE Freq.	373.6			-5.4			0.1	7.8	55.1	3.8	OK
					SLE Q.P.	382.4			-5.4			0.1	8.0	56.4	3.9	OK
Camp.	0.47	6.95	20.85	487.5	7.6	499.5	12189.3	0.10	-6.2	-34055.2	0.16					
					SLE Rare	226.2			-4.8			0.0	1.2	30.9	4.0	
					SLE Freq.	217.3			-4.8			0.0	1.1	29.7	3.8	OK
					SLE Q.P.	226.1			-4.8			0.0	1.2	30.9	4.0	OK
173	0.45	7.74	25.18			436.2	13435.0	0.10	0.0	-40718.1	0.18					
					SLE Rare	75.8			0.0			0.0	0.4	9.9	1.5	
					SLE Freq.	66.9			0.0			0.0	0.3	8.7	1.3	OK
					SLE Q.P.	75.7			0.0			0.0	0.4	9.9	1.5	OK

Da [m]	A [m]	Dx [m]	V_{Ed} [kg]	$V_{Rd,c}$ [kg]	V_{Rcd} [kg]	V_{Rd} [kg]	Staffe
Trave 169 173 Sez. 8 Rett. 80x50 [cm] Appoggio							
0.45	0.44	-0.01	1661.9	13681.8	116307.3	25225.3	ø 10 2br. 10.0'

Travata: ***61 Travata 178 182***

Nodo	x [m]	A_{fe} [cm²]	A_{fi} [cm²]	q_T [kg/m]	M_{rif} [kgm]	M_{de} [kgm]	M_{re} [kgm]	x/d	M_{di} [kgm]	M_{ri} [kgm]	x/d	σ_{be} [kg/cm²]	σ_{bi} [kg/cm²]	σ_{fe} [kg/cm²]	σ_{fi} [kg/cm²]	w mm
Trave Sez. 8 Rett. 80x50 [cm] Appoggio Area tirante a taglio insufficiente																
178	0.05	6.43	18.31			527.2	11356.6	0.10	0.0	30116.0	0.14					
					SLE Rare	76.3			0.0			0.0	0.4	11.9	1.6	
					SLE Freq.	75.4			0.0			0.0	0.4	11.8	1.6	OK
					SLE Q.P.	76.4			0.0			0.0	0.4	12.0	1.6	OK
Camp.	0.10	7.18	18.23	487.5	12.9	926.3	12546.7	0.10	-11.5	29992.5	0.14					
					SLE Rare	387.0			-8.8			0.0	2.0	60.7	8.4	
					SLE Freq.	386.1			-8.8			0.0	2.0	60.6	8.4	OK
					SLE Q.P.	387.1			-8.8			0.0	2.0	60.8	8.4	OK
182	0.15	7.94	20.14			926.7	13739.3	0.10	-9.0	32972.4	0.15					
					SLE Rare	712.7			-7.0			0.0	3.5	112.2	16.9	
					SLE Freq.	711.8			-7.0			0.0	3.5	112.0	16.9	OK
					SLE Q.P.	712.8			-7.0			0.0	3.5	112.2	16.9	OK

Da [m]	A [m]	Dx [m]	V_{Ed} [kg]	$V_{Rd,c}$ [kg]	V_{Rcd} [kg]	V_{Rd} [kg]	Staffe
Trave 178 182 Sez. 8 Rett. 80x50 [cm] Appoggio Vd 443394.7 > VR_{cd} 116307.3							
0.05	0.07	0.02	443394.7	16446.4	116307.3	100901.4	ø 10 4br. 5.0'

Travata: ***63 Travata 179 183***

Nodo	x [m]	A_{fe} [cm²]	A_{fi} [cm²]	q_T [kg/m]	M_{rif} [kgm]	M_{de} [kgm]	M_{re} [kgm]	x/d	M_{di} [kgm]	M_{ri} [kgm]	x/d	σ_{be} [kg/cm²]	σ_{bi} [kg/cm²]	σ_{fe} [kg/cm²]	σ_{fi} [kg/cm²]	w mm
Trave Sez. 8 Rett. 80x50 [cm] Appoggio Area tirante a taglio insufficiente																

179	0.05	6.43	18.31			186.5	11356.6	0.10	0.0	30116.0	0.14						
					SLE Rare	25.6			0.0			0.0	0.1	4.0	0.5		
					SLE Freq.	25.9			0.0			0.0	0.1	4.0	0.6	OK	
					SLE Q.P.	24.5			0.0			0.0	0.1	3.8	0.5	OK	
Camp.	0.10	7.18	18.23	487.5	12.9	341.2	12546.7	0.10	-11.5	29992.5	0.14						
					SLE Rare	136.6			-8.8			0.0	0.7	21.4	3.0		
					SLE Freq.	136.9			-8.8			0.0	0.7	21.5	3.0	OK	
					SLE Q.P.	135.5			-8.8			0.0	0.7	21.3	3.0	OK	
183	0.15	7.94	20.14			341.4	13739.3	0.10	-9.0	32972.4	0.15						
					SLE Rare	262.7			-7.0			0.0	1.3	41.3	6.2		
					SLE Freq.	263.0			-7.0			0.0	1.3	41.4	6.2	OK	
					SLE Q.P.	261.6			-7.0			0.0	1.3	41.2	6.2	OK	

Da [m]	A [m]	Dx [m]	V_{Ed} [kg]	$V_{Rd,c}$ [kg]	V_{Rcd} [kg]	V_{Rd} [kg]	Staffe
Trave 179 183 Sez. 8 Rett. 80x50 [cm] Appoggio **Vd 443394.7 > VR_{cd}116307.3**							
0.05	0.07	0.02	443394.7	16446.4	116307.3	100901.4	ø 10 4br. 5.0'

Travata: ***7 Travata 184 200***

Nodo	x [m]	A_{fe} [cm²]	A_{fi} [cm²]	q_T [kg/m]	M_{rif} [kgm]	M_{de} [kgm]	M_{re} [kgm]	x/d	M_{di} [kgm]	M_{ri} [kgm]	x/d	σ_{be} [kg/cm²]	σ_{bi} [kg/cm²]	σ_{fe} [kg/cm²]	σ_{fi} [kg/cm²]	w mm
Trave Sez. 4 a T 60x80x30x30 [cm] Tegoli																
184	0.48	12.72	12.72			15442.8	35434.6	0.09	-13.4	-35940.8	0.07					
					SLE Rare	10288.9			-20.5			0.0	31.8	1178.6	368.6	
					SLE Freq.	1124.9			-1095.9			2.4	3.5	128.8	123.8	OK
					SLE Q.P.	10627.1			0.0			0.0	32.8	1217.3	380.7	OK
Camp.	1.67	12.72	12.72	611.4	321.0	13225.0	35434.6	0.09	-318.8	-35940.8	0.07					
					SLE Rare	8249.9			-216.3			0.5	25.5	945.0	295.5	
					SLE Freq.	2088.0			-216.3			0.5	6.4	239.2	74.8	OK
					SLE Q.P.	8196.3			-100.3			0.2	25.3	938.9	293.6	OK
200	2.85	5.29	7.85			9590.3	15015.1	0.07	0.0	-22507.6	0.06					
					SLE Rare	5714.8			0.0			0.0	26.3	641.2	165.7	
					SLE Freq.	2347.8			0.0			0.0	10.8	263.4	68.1	OK
					SLE Q.P.	5428.4			0.0			0.0	25.0	609.1	157.4	OK

Da [m]	A [m]	Dx [m]	V_{Ed} [kg]	$V_{Rd,c}$ [kg]	V_{Rcd} [kg]	V_{Rd} [kg]	Staffe

Trave 184 200 Sez. 4 a T 60x80x30x30 [cm] Tegoli							
0.73	1.45	0.71	24443.7	9939.2	72309.5	33456.8	ø 10 2br. 12.5'
1.45	2.13	0.68	24561.4	9939.2	72309.5	27880.6	ø 10 2br. 15.0'
2.13	2.85	0.71	24684.5	8460.2	72309.5	33456.8	ø 10 2br. 12.5'

Travata: ***70 Travata 184 195 196 197 198 199***

Nodo	x [m]	A_{fe} [cm²]	A_{fi} [cm²]	q_T [kg/m]	M_{rif} [kgm]	M_{de} [kgm]	M_{re} [kgm]	x/d	M_{di} [kgm]	M_{ri} [kgm]	x/d	σ_{be} [kg/cm²]	σ_{bi} [kg/cm²]	σ_{fe} [kg/cm²]	σ_{fi} [kg/cm²]	w mm
Trave Sez. 12 Rett. 30x40 [cm] Cordolo copertura																
184	0.50	7.63	7.63			0.0	9518.0	0.17	-3039.2	-9518.0	0.17					
					SLE Rare	0.0			-2084.3			28.4	0.0	243.3	881.1	
					SLE Freq.	0.0			-1099.2			15.0	0.0	128.3	464.7	OK
					SLE Q.P.	0.0			-2079.2			28.3	0.0	242.7	878.9	OK
Camp.	1.65	7.63	7.63	0.0	0.0	0.0	9518.0	0.17	-1314.4	-9518.0	0.17					
					SLE Rare	0.0			-718.2			9.8	0.0	83.8	303.6	
					SLE Freq.	0.0			-291.8			4.0	0.0	34.1	123.4	OK
					SLE Q.P.	0.0			-708.3			9.6	0.0	82.7	299.4	OK
195	2.80	15.27	15.27			917.1	18517.1	0.20	0.0	-18517.1	0.20					
					SLE Rare	647.9			0.0			0.0	6.0	139.7	58.2	
					SLE Freq.	515.6			0.0			0.0	4.8	111.2	46.3	OK
					SLE Q.P.	662.6			0.0			0.0	6.2	142.9	59.5	OK
Trave Sez. 12 Rett. 30x40 [cm] Cordolo copertura																
195	0.15	15.27	15.27			232.5	18517.1	0.20	-1506.9	-18517.1	0.20					
					SLE Rare	161.0			-987.4			9.2	1.5	88.7	212.9	
					SLE Freq.	194.2			-48.9			0.5	1.8	41.9	17.4	OK
					SLE Q.P.	0.0			-969.1			9.0	0.0	87.0	208.9	OK
Camp.	1.48	8.25	7.63	0.0	0.0	415.8	10241.6	0.17	-13.5	-9517.9	0.17					
					SLE Rare	251.1			0.0			0.0	3.3	98.6	29.2	
					SLE Freq.	237.6			0.0			0.0	3.2	93.2	27.6	OK
					SLE Q.P.	162.2			0.0			0.0	2.2	63.6	18.9	OK
196	2.80	15.27	15.27			1909.2	18517.1	0.20	0.0	-18517.1	0.20					
					SLE Rare	1293.3			0.0			0.0	12.0	278.8	116.2	
					SLE Freq.	479.5			0.0			0.0	4.5	103.4	43.1	OK
					SLE Q.P.	1293.5			0.0			0.0	12.0	278.9	116.2	OK
Trave Sez. 12 Rett. 30x40 [cm] Cordolo																

						copertura											
196	0.15	15.27	15.27			487.1	18517.1	0.20	-211.1	18517.1	0.20						
					SLE Rare	354.2			-111.2			1.0	3.3	76.4	31.8		
					SLE Freq.	339.8			0.0			0.0	3.2	73.3	30.5	OK	
					SLE Q.P.	0.0			-92.6			0.9	0.0	8.3	20.0	OK	
Camp.	1.35	9.29	7.63	0.0	0.0	642.5	11466.3	0.19	-168.3	-9517.7	0.16						
					SLE Rare	355.0			-71.3			0.9	4.5	124.3	41.0		
					SLE Freq.	4.3			-87.0			1.1	0.1	9.6	36.8	OK	
					SLE Q.P.	351.4			0.0			0.0	4.5	123.0	40.6	OK	
197	2.55	15.27	15.27			1302.2	18517.1	0.20	-674.9	18517.1	0.20						
					SLE Rare	821.3			-496.8			4.6	7.6	177.1	107.1		
					SLE Freq.	0.0			-513.8			4.8	0.0	46.1	110.8	OK	
					SLE Q.P.	795.4			0.0			0.0	7.4	171.5	71.4	OK	
						Trave Sez. 12 Rett. 30x40 [cm] Cordolo copertura											
197	0.40	15.27	15.27			0.0	18517.1	0.20	-2972.9	18517.1	0.20						
					SLE Rare	0.0			-2022.9			18.8	0.0	181.7	436.1		
					SLE Freq.	0.0			-671.8			6.2	0.0	60.3	144.8	OK	
					SLE Q.P.	0.0			-2027.4			18.8	0.0	182.1	437.1	OK	
Camp.	1.35	14.83	11.78	0.0	0.0	77.3	17970.5	0.22	-1031.2	14413.8	0.18						
					SLE Rare	4.1			-450.7			4.6	0.0	41.6	124.9		
					SLE Freq.	20.3			-74.7			0.8	0.2	6.9	20.7	OK	
					SLE Q.P.	0.0			-456.6			4.6	0.0	42.2	126.5	OK	
198	2.30	15.27	15.27			1642.4	18517.1	0.20	0.0	18517.1	0.20						
					SLE Rare	1121.5			0.0			0.0	10.4	241.8	100.7		
					SLE Freq.	522.4			0.0			0.0	4.9	112.6	46.9	OK	
					SLE Q.P.	1114.2			0.0			0.0	10.4	240.2	100.1	OK	
						Trave Sez. 12 Rett. 30x40 [cm] Cordolo copertura											
198	0.15	15.27	15.27			413.7	18517.1	0.20	-348.6	18517.1	0.20						
					SLE Rare	288.7			-208.1			1.9	2.7	62.3	44.9		
					SLE Freq.	335.2			0.0			0.0	3.1	72.3	30.1	OK	
					SLE Q.P.	0.0			-208.8			1.9	0.0	18.8	45.0	OK	
Camp.	1.05	11.66	10.26	0.0	0.0	1743.4	14255.5	0.20	0.0	12620.6	0.18						
					SLE Rare	984.1			0.0			0.0	11.0	276.3	103.2		
					SLE Freq.	240.2			0.0			0.0	2.7	67.4	25.2	OK	
					SLE Q.P.	983.6			0.0			0.0	11.0	276.2	103.2	OK	
199	1.95	7.63	7.63			3250.3	9518.0	0.17	-146.3	-9518.0	0.17						
					SLE Rare	2176.3			-87.2			1.2	29.6	920.0	254.1		
					SLE Freq.	260.9			-229.6			3.1	3.6	110.3	97.1	OK	

	SLE Q.P.	2175.9			0.0			0.0	29.6	919.8	254.0	OK

Da [m]	A [m]	Dx [m]	V_{Ed} [kg]	$V_{Rd,c}$ [kg]	V_{Rcd} [kg]	V_{Rd} [kg]	Staffe
Trave 184 195 Sez. 12 Rett. 30x40 [cm] Cordolo copertura							
0.77	1.12	0.35	12189.1	5862.0	34050.5	26258.0	ø 10 2br. 7.5'
1.12	2.45	1.33	12189.1	5862.0	34050.5	13129.0	ø 10 2br. 15.0'
2.45	2.80	0.35	12189.1	7385.7	34050.5	26258.0	ø 10 2br. 7.5'
Trave 195 196 Sez. 12 Rett. 30x40 [cm] Cordolo copertura							
0.15	0.55	0.40	13975.1	7377.2	34050.5	26258.0	ø 10 2br. 7.5'
0.55	2.40	1.85	13975.1	5862.0	34050.5	15754.8	ø 10 2br. 12.5'
2.40	2.80	0.40	13975.1	7376.3	34050.5	26258.0	ø 10 2br. 7.5'
Trave 196 197 Sez. 12 Rett. 30x40 [cm] Cordolo copertura							
0.15	0.52	0.37	15430.9	7379.6	34050.5	26258.0	ø 10 2br. 7.5'
0.52	2.00	1.48	15430.9	5862.0	34050.5	15754.8	ø 10 2br. 12.5'
2.00	2.37	0.37	15430.9	7385.7	34050.5	26258.0	ø 10 2br. 7.5'
Trave 197 198 Sez. 12 Rett. 30x40 [cm] Cordolo copertura							
0.58	0.94	0.36	19491.6	7385.7	34050.5	26258.0	ø 10 2br. 7.5'
0.94	1.94	1.00	19491.6	6773.8	34050.5	19693.5	ø 10 2br. 10.0'
1.94	2.30	0.36	19491.6	7385.7	34050.5	26258.0	ø 10 2br. 7.5'
Trave 198 199 Sez. 12 Rett. 30x40 [cm] Cordolo copertura							
0.15	0.49	0.34	15575.0	7385.7	34050.5	26258.0	ø 10 2br. 7.5'
0.49	1.35	0.86	15575.0	5862.0	34050.5	15754.8	ø 10 2br. 12.5'
1.35	1.69	0.34	15575.0	5862.0	34050.5	26258.0	ø 10 2br. 7.5'

Travata: ***9 Travata 190 209***

Nodo	x [m]	A_{fe} [cm²]	A_{fi} [cm²]	q_T [kg/m]	M_{rif} [kgm]	M_{de} [kgm]	M_{re} [kgm]	x/d	M_{di} [kgm]	M_{ri} [kgm]	x/d	σ_{be} [kg/cm²]	σ_{bi} [kg/cm²]	σ_{fe} [kg/cm²]	σ_{fi} [kg/cm²]	w mm
Trave Sez. 4 a T 60x80x30x30 [cm] ***Tegoli*** **EC2 4.4.2.3. Fessurazione : tensione eccessiva barre di Intradosso**																
190	0.13	15.74	13.93			0.0	43681.3	0.10	-6924.2	-39247.2	0.08					
				SLE Rare		0.0			-1312.0			2.7	0.0	15.1	123.6	
				SLE Freq.		0.0			-1312.0			2.7	0.0	15.1	123.6	OK
				SLE Q.P.		0.0			-608.2			1.3	0.0	7.0	57.3	OK
Camp	6.86	30.5	12.7	2223.	26310.	0.0	81423.	0.2	-	-	0.0					

.		4	2	4	0		8	7	52620.0	35930.8	7					
				SLE Rare		0.0			-35702.3			66.9	0.0	677.1	4001.2	
				SLE Freq.		0.0			-35702.3			66.9	0.0	677.1	4001.2	NON VERIFICATO
				SLE Q.P.		0.0			-16550.7			31.0	0.0	313.9	1854.9	NON VERIFICATO
209	13.59	17.64	13.97			0.0	48876.6	0.11	-7423.0	-39376.0	0.07					
				SLE Rare		0.0			-1662.9			3.4	0.0	21.0	156.5	
				SLE Freq.		0.0			-1662.9			3.4	0.0	21.0	156.5	OK
				SLE Q.P.		0.0			-770.9			1.6	0.0	9.7	72.6	OK

Da [m]	A [m]	Dx [m]	V_{Ed} [kg]	$V_{Rd,c}$ [kg]	V_{Rcd} [kg]	V_{Rd} [kg]	Staffe
Trave 190 209 Sez. 4 a T 60x80x30x30 [cm] Tegoli							
0.13	0.93	0.80	15002.3	10243.1	72309.5	33456.8	ø 10 2br. 12.5'
0.93	12.79	11.86	13223.6	9939.2	72309.5	16728.4	ø 10 2br. 25.0'
12.79	13.59	0.80	14923.6	10254.6	72309.5	33456.8	ø 10 2br. 12.5'

3.2 Verifiche pilastri

Modalità di verifica

I pilastri vengono verificati (a discrezione dell'operatore) secondo le seguenti modalità:

- Presso-tenso flessione deviata.
- Presso-tenso flessione retta. In tale caso viene svolta prima la verifica a presso-tenso flessione considerando come azioni agenti lo sforzo normale ed il momento M_x agente sulla sezione poi, disgiuntamente, considerando come azioni agenti lo sforzo normale e l'altro momento M_y. A discrezione dell'operatore tali momenti (a favore della sicurezza) possono essere incrementati di un fattore di amplificazione anch'esso a discrezione dell'utente.

Per ogni pilastro le veriche vengono svolte sia nella sezione di sommità che in quella di base in tutte le combinazioni di carico.

Nelle stampe vengono quindi riportate per le due sezioni di verifica succitate:

La combinazione di carico, le sollecitazioni (sforzo normale e momenti) che inducono le massime tensioni nel calcestruzzo, nel ferro teso e nel ferro compresso.

Il programma, per ogni sezione, una volta posizionati i ferri d'angolo sulla sezione, introduce lungo i bordi eventuali ferri di completamento così da rispettare l'interasse massimo fra i ferri imposto dall'operatore.

La verifica procede considerando (quanto a diametri) fissi i ferri di bordo, eventualmente introdotti, ed incrementando negli angoli il numero di ferri presenti ovvero il diametro degli stessi.

Tutti gli angoli della sezione vengono armati nella stesso modo sia quanto a diametro dei ferri presenti che quanto a numero di ferri.

Si noti che in ottemperanza a quanto prescritto nel punto **3.1.3** del *D.M. 14 febbraio 1992*, il programma, qualora la tensione media dell'intera sezione superi la tensione ammissibile per compressione semplice, considera tale situazione non verificata benchè possa risultare soddisfatta la verifica a pressoflessione utilizzando la sigma massima del calcestruzzo impiegato.

Sezioni Impiegate:

Sez. Num.	Info	Dimensioni	Criterio	Calcestruzzo	f_{ck} [kg/cm²]	f_{cd} [kg/cm²]	σ_{RARE} [kg/cm²]	σ_{FREQ} [kg/cm²]	σ_{QP} [kg/cm²]	Acciaio	f_{yk} [kg/cm²]	f_{yd} [kg/cm²]	σ_{yRARE} [kg/cm²]	σ_{yFREQ} [kg/cm²]	σ_{yQP} [kg/cm²]	Copr. [cm]	Verifica	cotg θ
1	Rett. Pil 80x100	B 80 [cm] H 100 [cm]	Verpil	C25/30	250.0	141.7	150.0	250.0	112.5	B 450 C	4500.0	3913.0	3600.0	4500.0	4500.0	3.00	Deviata	1.0
4	Rett. Pil 80x80	B 80 [cm] H 80 [cm]	Verpil	C25/30	250.0	141.7	150.0	250.0	112.5	B 450 C	4500.0	3913.0	3600.0	4500.0	4500.0	3.00	Deviata	1.0

Verifiche Pilastri:

Fattore di sovraresistenza $\gamma_{R,d}$=1.10

Pilastro: 1/184 / L 21.39[m] / Sezione 1 B 80 [cm]H 100 [cm]

Af: 4 ø 22 + 26 ø 18 Af=81.37 [cm²] **< 1□22 x 4 V + 6□18 x 2 B + 7□18 x 2 H >**

Staffe: ø 8 4br.x6br./7.5' x 2139.2

Verifiche a Presso-Flessione S.L.U.

Nodo	Comb	N	M_{12}	M_{13}	α_{12}	α_{13}	Sd/Sr
1	2	-24034.2	-60368.7	-2768.5	1.00	1.00	0.37
22	4	-39663.6	-89.9	7869.8	1.00	1.00	0.05
22	4	-34169.7	2596.1	7869.8	1.00	1.00	0.05
34	2	-18220.3	19478.0	1966.2	1.00	1.00	0.10
34	2	-7164.1	-13833.7	1641.0	1.00	1.00	0.08
72	2	-6923.2	-10183.8	-1060.2	1.00	1.00	0.06
72	2	-6914.1	-10226.0	-1053.5	1.00	1.00	0.06
89	2	-6914.1	-6849.8	-1404.2	1.00	1.00	0.04
89	2	-6867.1	-6888.3	-1390.3	1.00	1.00	0.04
111	4	-12247.7	-362.8	-4857.0	1.00	1.00	0.03
111	4	-12074.0	-353.1	-4766.8	1.00	1.00	0.02

132	4	-12074.0	-128.8	-5204.1	1.00	1.00	0.03
132	4	-11904.4	-119.4	-5107.5	1.00	1.00	0.03
153	4	-11904.4	-136.6	-5441.8	1.00	1.00	0.03
153	4	-11664.5	-137.5	-5342.9	1.00	1.00	0.03
167	2	-6572.2	13188.6	2529.7	1.00	1.00	0.08
167	2	999.0	16918.0	2529.7	1.00	1.00	0.13
184	2	1118.4	24950.9	-1688.1	1.00	1.00	0.18

Verifiche a Taglio

Da [m]	A [m]	V_{d12} [kg]	V_{Rd12} [kg]	V_{d13} [kg]	V_{Rd13} [kg]	Staffe
0.15	21.54	14194.2	90256.6	13706.4	107061.7	ø 8 4br.x6br./7.5'

Verifiche a Presso-Flessione S.L.E.

Nodo	Comb	N [kg]	M_{12} [kgm]	M_{13} [kgm]	σ [kg/cm²]
		Combinazioni Rare			
1	Ft. 8	-18490.5	-40352.6	-1849.1	1261.5
	$\sigma_{s,c}$8	-18490.5	-40352.6	-1849.1	-532.5
	$\sigma_{cls,Max}$8	-18490.5	-40352.6	-1849.1	-42.1
	$\sigma_{cls,Med}$8	-18490.5	-40352.6	-1849.1	-19.5
22	Ft. 10	-28885.5	-90.8	5231.9	7.8
	$\sigma_{s,c}$10	-28885.5	-90.8	5231.9	-100.3
	$\sigma_{cls,Max}$10	-28885.5	-90.8	5231.9	-7.2
	$\sigma_{cls,Med}$10	-28885.5	-90.8	5231.9	-3.6
22	Ft. 10	-24794.0	1908.1	5231.9	39.3
	$\sigma_{s,c}$10	-24794.0	1908.1	5231.9	-113.6
	$\sigma_{cls,Max}$10	-24794.0	1908.1	5231.9	-8.2
	$\sigma_{cls,Med}$10	-24794.0	1908.1	5231.9	-3.5
34	Ft. 8	-14152.8	13188.6	1299.3	328.8
	$\sigma_{s,c}$8	-14152.8	13188.6	1299.3	-195.4
	$\sigma_{cls,Max}$8	-14152.8	13188.6	1299.3	-15.0
	$\sigma_{cls,Med}$8	-14152.8	13188.6	1299.3	-6.6
34	Ft. 8	-5054.6	-9433.6	1061.3	300.1
	$\sigma_{s,c}$8	-5054.6	-9433.6	1061.3	-138.6
	$\sigma_{cls,Max}$8	-5054.6	-9433.6	1061.3	-10.9
	$\sigma_{cls,Med}$8	-5054.6	-9433.6	1061.3	-4.6
72	Ft. 8	-4869.4	-6884.4	-708.8	202.7
	$\sigma_{s,c}$8	-4869.4	-6884.4	-708.8	-100.9
	$\sigma_{cls,Max}$8	-4869.4	-6884.4	-708.8	-7.9
	$\sigma_{cls,Med}$8	-4869.4	-6884.4	-708.8	-3.4

Nodo	Comb	N [kg]	M_{12} [kgm]	M_{13} [kgm]	σ [kg/cm²]
72	Ft. 8	-4856.8	-6911.2	-704.1	203.7
	$\sigma_{s,c}$8	-4856.8	-6911.2	-704.1	-101.1
	$\sigma_{cls,Max}$8	-4856.8	-6911.2	-704.1	-7.9
	$\sigma_{cls,Med}$8	-4856.8	-6911.2	-704.1	-3.4
89	Ft. 8	-4856.8	-4628.2	-922.9	127.1
	$\sigma_{s,c}$8	-4856.8	-4628.2	-922.9	-77.4
	$\sigma_{cls,Max}$8	-4856.8	-4628.2	-922.9	-5.9
	$\sigma_{cls,Med}$8	-4856.8	-4628.2	-922.9	-2.3
89	Ft. 8	-4815.0	-4651.6	-912.4	128.2
	$\sigma_{s,c}$8	-4815.0	-4651.6	-912.4	-77.5
	$\sigma_{cls,Max}$8	-4815.0	-4651.6	-912.4	-6.0
	$\sigma_{cls,Med}$8	-4815.0	-4651.6	-912.4	-2.4
111	Ft. 10	-8402.1	-279.0	-3214.3	53.0
	$\sigma_{s,c}$10	-8402.1	-279.0	-3214.3	-56.5
	$\sigma_{cls,Max}$10	-8402.1	-279.0	-3214.3	-4.3
	$\sigma_{cls,Med}$10	-8402.1	-279.0	-3214.3	-2.0
111	Ft. 10	-8275.8	-270.3	-3152.9	51.6
	$\sigma_{s,c}$10	-8275.8	-270.3	-3152.9	-55.4
	$\sigma_{cls,Max}$10	-8275.8	-270.3	-3152.9	-4.2
	$\sigma_{cls,Med}$10	-8275.8	-270.3	-3152.9	-2.0
132	Ft. 10	-8275.8	-107.3	-3442.3	60.4
	$\sigma_{s,c}$10	-8275.8	-107.3	-3442.3	-57.6
	$\sigma_{cls,Max}$10	-8275.8	-107.3	-3442.3	-4.4
	$\sigma_{cls,Med}$10	-8275.8	-107.3	-3442.3	-2.1
132	Ft. 10	-8152.2	-98.8	-3376.5	58.8
	$\sigma_{s,c}$10	-8152.2	-98.8	-3376.5	-56.5
	$\sigma_{cls,Max}$10	-8152.2	-98.8	-3376.5	-4.3
	$\sigma_{cls,Med}$10	-8152.2	-98.8	-3376.5	-2.1
153	Ft. 8	-4732.8	3678.1	-161.8	78.7
	$\sigma_{s,c}$10	-8152.2	-104.7	-3602.6	-59.9
	$\sigma_{cls,Max}$10	-8152.2	-104.7	-3602.6	-4.6
	$\sigma_{cls,Med}$10	-8152.2	-104.7	-3602.6	-2.2
153	Ft. 8	-4636.4	3628.1	-158.6	77.9
	$\sigma_{s,c}$10	-7974.2	-104.2	-3536.1	-58.8
	$\sigma_{cls,Max}$10	-7974.2	-104.2	-3536.1	-4.5
	$\sigma_{cls,Med}$10	-7974.2	-104.2	-3536.1	-2.2
167	Ft. 8	-4570.4	8760.7	1705.8	297.6
	$\sigma_{s,c}$8	-4570.4	8760.7	1705.8	-143.5
	$\sigma_{cls,Max}$8	-4570.4	8760.7	1705.8	-11.2
	$\sigma_{cls,Med}$8	-4570.4	8760.7	1705.8	-4.4
167	Ft. 8	715.1	11359.8	1705.8	461.0
	$\sigma_{s,c}$8	715.1	11359.8	1705.8	-168.5

Nodo	Comb	N [kg]	M_{12} [kgm]	M_{13} [kgm]	σ [kg/cm²]
	$\sigma_{cls,Max}$8	715.1	11359.8	1705.8	-13.6
	$\sigma_{cls,Med}$7	-252.1	7706.5	916.2	-3.7
184	Ft. 8	806.9	16681.6	-966.7	634.9
	$\sigma_{s,c}$8	806.9	16681.6	-966.7	-212.6
	$\sigma_{cls,Max}$8	806.9	16681.6	-966.7	-17.3
	$\sigma_{cls,Med}$7	-160.2	9984.1	192.6	-4.7
	Combinazioni Frequenti				
1	Ft. 12	-25456.1	-9448.0	-241.8	80.9
	$\sigma_{s,c}$12	-25456.1	-9448.0	-241.8	-134.1
	$\sigma_{cls,Max}$12	-25456.1	-9448.0	-241.8	-9.7
	$\sigma_{cls,Med}$12	-25456.1	-9448.0	-241.8	-4.7
22	Ft. 14	-27387.7	-126.5	1020.6	-33.5
	$\sigma_{s,c}$14	-27387.7	-126.5	1020.6	-55.6
	$\sigma_{cls,Max}$14	-27387.7	-126.5	1020.6	-3.8
	$\sigma_{cls,Med}$11	-28049.6	-117.4	-26.7	-3.0
22	Ft. 14	-23421.2	1809.9	1020.6	-13.4
	$\sigma_{s,c}$14	-23421.2	1809.9	1020.6	-62.8
	$\sigma_{cls,Max}$14	-23421.2	1809.9	1020.6	-4.4
	$\sigma_{cls,Med}$11	-23958.1	1881.5	-26.7	-2.6
34	Ft. 12	-21243.5	4492.3	206.1	4.9
	$\sigma_{s,c}$12	-21243.5	4492.3	206.1	-73.5
	$\sigma_{cls,Max}$12	-21243.5	4492.3	206.1	-5.2
	$\sigma_{cls,Med}$11	-23896.2	2427.6	-54.5	-2.6
34	Ft. 12	-7541.7	-3956.7	47.2	57.4
	$\sigma_{s,c}$12	-7541.7	-3956.7	47.2	-54.1
	$\sigma_{cls,Max}$12	-7541.7	-3956.7	47.2	-4.0
	$\sigma_{cls,Med}$12	-7541.7	-3956.7	47.2	-2.0
72	Ft. 12	-7356.4	-2221.8	-71.3	11.8
	$\sigma_{s,c}$12	-7356.4	-2221.8	-71.3	-32.5
	$\sigma_{cls,Max}$12	-7356.4	-2221.8	-71.3	-2.3
	$\sigma_{cls,Med}$12	-7356.4	-2221.8	-71.3	-1.1
72	Ft. 12	-7314.9	-2223.5	-65.6	12.0
	$\sigma_{s,c}$12	-7314.9	-2223.5	-65.6	-32.5
	$\sigma_{cls,Max}$12	-7314.9	-2223.5	-65.6	-2.3
	$\sigma_{cls,Med}$12	-7314.9	-2223.5	-65.6	-1.1
89	Ft. 12	-7314.9	-1435.0	-25.8	0.1
	$\sigma_{s,c}$12	-7314.9	-1435.0	-25.8	-23.8
	$\sigma_{cls,Max}$12	-7314.9	-1435.0	-25.8	-1.7
	$\sigma_{cls,Med}$11	-8297.4	-630.7	194.9	-0.9
89	Ft. 12	-7243.8	-1430.2	-12.9	0.0
	$\sigma_{s,c}$12	-7243.8	-1430.2	-12.9	-23.6
	$\sigma_{cls,Max}$12	-7243.8	-1430.2	-12.9	-1.7
	$\sigma_{cls,Med}$11	-8220.1	-619.2	207.1	-0.9

Nodo	Comb	N [kg]	M_{12} [kgm]	M_{13} [kgm]	σ [kg/cm²]
111	Ft. 13	-5608.0	-321.7	204.0	-4.5
	$\sigma_{s,c}$14	-7961.2	-358.6	-440.1	-20.2
	$\sigma_{cls,Max}$14	-7961.2	-358.6	-440.1	-1.4
	$\sigma_{cls,Med}$11	-8220.1	-377.0	249.8	-0.9
111	Ft. 13	-5532.0	-308.1	212.4	-4.4
	$\sigma_{s,c}$14	-7872.5	-347.5	-416.2	-19.7
	$\sigma_{cls,Max}$14	-7872.5	-347.5	-416.2	-1.4
	$\sigma_{cls,Med}$11	-8142.0	-365.6	263.1	-0.9
132	Ft. 13	-5532.0	-257.7	202.9	-4.9
	$\sigma_{s,c}$14	-7872.5	-255.3	-517.9	-20.0
	$\sigma_{cls,Max}$14	-7872.5	-255.3	-517.9	-1.4
	$\sigma_{cls,Med}$11	-8142.0	-305.7	211.3	-0.9
132	Ft. 13	-5455.5	-244.4	212.1	-4.8
	$\sigma_{s,c}$14	-7783.9	-244.4	-492.1	-19.5
	$\sigma_{cls,Max}$14	-7783.9	-244.4	-492.1	-1.4
	$\sigma_{cls,Med}$11	-8063.2	-294.5	225.7	-0.9
153	Ft. 14	-7783.9	-330.7	-663.6	-3.5
	$\sigma_{s,c}$14	-7783.9	-330.7	-663.6	-21.9
	$\sigma_{cls,Max}$14	-7783.9	-330.7	-663.6	-1.5
	$\sigma_{cls,Med}$11	-8063.2	-424.3	74.9	-0.9
153	Ft. 14	-7639.0	-327.6	-641.7	-3.5
	$\sigma_{s,c}$14	-7639.0	-327.6	-641.7	-21.4
	$\sigma_{cls,Max}$14	-7639.0	-327.6	-641.7	-1.5
	$\sigma_{cls,Med}$11	-7927.8	-420.9	84.3	-0.9
167	Ft. 14	-7573.0	-1259.4	-726.8	6.0
	$\sigma_{s,c}$14	-7573.0	-1259.4	-726.8	-30.3
	$\sigma_{cls,Max}$14	-7573.0	-1259.4	-726.8	-2.2
	$\sigma_{cls,Med}$11	-7861.8	-1478.3	-334.5	-0.9
167	Ft. 12	-2119.9	3006.3	52.4	83.0
	$\sigma_{s,c}$12	-2119.9	3006.3	52.4	-38.7
	$\sigma_{cls,Max}$12	-2119.9	3006.3	52.4	-3.0
	$\sigma_{cls,Med}$12	-2119.9	3006.3	52.4	-1.5
184	Ft. 12	-2028.1	2908.0	525.9	91.2
	$\sigma_{s,c}$12	-2028.1	2908.0	525.9	-47.2
	$\sigma_{cls,Max}$12	-2028.1	2908.0	525.9	-3.7
	$\sigma_{cls,Med}$12	-2028.1	2908.0	525.9	-1.5

Combinazioni Quasi Permanenti

1	Ft. 15	-20515.9	-40302.9	-1851.0	1234.4
	$\sigma_{s,c}$15	-20515.9	-40302.9	-1851.0	-534.4
	$\sigma_{cls,Max}$15	-20515.9	-40302.9	-1851.0	-42.1
	$\sigma_{cls,Med}$15	-20515.9	-40302.9	-1851.0	-19.6
22	Ft. 15	-20331.7	-410.9	412.2	-25.7
	$\sigma_{s,c}$15	-20331.7	-410.9	412.2	-40.5

Nodo	Comb	N [kg]	M_{12} [kgm]	M_{13} [kgm]	σ [kg/cm²]
	$\sigma_{cls,Max}$15	-20331.7	-410.9	412.2	-2.8
	$\sigma_{cls,Med}$15	-20331.7	-410.9	412.2	-2.2
22	Ft. 15	-15865.2	1775.7	412.2	-7.4
	$\sigma_{s,c}$15	-15865.2	1775.7	412.2	-44.3
	$\sigma_{cls,Max}$15	-15865.2	1775.7	412.2	-3.1
	$\sigma_{cls,Med}$15	-15865.2	1775.7	412.2	-1.7
34	Ft. 15	-15803.3	13416.8	1334.6	318.5
	$\sigma_{s,c}$15	-15803.3	13416.8	1334.6	-199.8
	$\sigma_{cls,Max}$15	-15803.3	13416.8	1334.6	-15.2
	$\sigma_{cls,Med}$15	-15803.3	13416.8	1334.6	-6.7
34	Ft. 15	-5418.9	-9453.7	1053.4	296.0
	$\sigma_{s,c}$15	-5418.9	-9453.7	1053.4	-139.0
	$\sigma_{cls,Max}$15	-5418.9	-9453.7	1053.4	-10.9
	$\sigma_{cls,Med}$15	-5418.9	-9453.7	1053.4	-4.6
72	Ft. 15	-5233.6	-6845.2	-731.1	197.3
	$\sigma_{s,c}$15	-5233.6	-6845.2	-731.1	-101.1
	$\sigma_{cls,Max}$15	-5233.6	-6845.2	-731.1	-7.9
	$\sigma_{cls,Med}$15	-5233.6	-6845.2	-731.1	-3.4
72	Ft. 15	-5224.4	-6872.4	-730.8	198.4
	$\sigma_{s,c}$15	-5224.4	-6872.4	-730.8	-101.4
	$\sigma_{cls,Max}$15	-5224.4	-6872.4	-730.8	-7.9
	$\sigma_{cls,Med}$15	-5224.4	-6872.4	-730.8	-3.4
89	Ft. 15	-5224.4	-4590.2	-945.0	121.8
	$\sigma_{s,c}$15	-5224.4	-4590.2	-945.0	-77.5
	$\sigma_{cls,Max}$15	-5224.4	-4590.2	-945.0	-5.9
	$\sigma_{cls,Med}$15	-5224.4	-4590.2	-945.0	-2.3
89	Ft. 15	-5186.0	-4613.9	-938.8	123.0
	$\sigma_{s,c}$15	-5186.0	-4613.9	-938.8	-77.6
	$\sigma_{cls,Max}$15	-5186.0	-4613.9	-938.8	-5.9
	$\sigma_{cls,Med}$15	-5186.0	-4613.9	-938.8	-2.3
111	Ft. 15	-5186.0	-1922.4	-902.5	32.7
	$\sigma_{s,c}$15	-5186.0	-1922.4	-902.5	-40.2
	$\sigma_{cls,Max}$15	-5186.0	-1922.4	-902.5	-3.0
	$\sigma_{cls,Med}$15	-5186.0	-1922.4	-902.5	-1.1
111	Ft. 15	-5148.0	-1951.8	-897.2	33.7
	$\sigma_{s,c}$15	-5148.0	-1951.8	-897.2	-40.6
	$\sigma_{cls,Max}$15	-5148.0	-1951.8	-897.2	-3.0
	$\sigma_{cls,Med}$15	-5148.0	-1951.8	-897.2	-1.1
132	Ft. 15	-5148.0	851.1	-637.8	6.1
	$\sigma_{s,c}$15	-5148.0	851.1	-637.8	-22.3
	$\sigma_{cls,Max}$15	-5148.0	851.1	-637.8	-1.6
	$\sigma_{cls,Med}$15	-5148.0	851.1	-637.8	-0.6

Nodo	Comb	N [kg]	M_{12} [kgm]	M_{13} [kgm]	σ [kg/cm²]
132	Ft. 15	-5110.7	815.1	-633.1	5.7
	$\sigma_{s,c}$15	-5110.7	815.1	-633.1	-21.8
	$\sigma_{cls,Max}$15	-5110.7	815.1	-633.1	-1.6
	$\sigma_{cls,Med}$15	-5110.7	815.1	-633.1	-0.6
153	Ft. 15	-5110.7	3602.3	-136.6	71.4
	$\sigma_{s,c}$15	-5110.7	3602.3	-136.6	-50.0
	$\sigma_{cls,Max}$15	-5110.7	3602.3	-136.6	-3.8
	$\sigma_{cls,Med}$15	-5110.7	3602.3	-136.6	-1.8
153	Ft. 15	-5018.1	3552.0	-138.3	70.7
	$\sigma_{s,c}$15	-5018.1	3552.0	-138.3	-49.3
	$\sigma_{cls,Max}$15	-5018.1	3552.0	-138.3	-3.7
	$\sigma_{cls,Med}$15	-5018.1	3552.0	-138.3	-1.8
167	Ft. 15	-4952.1	8561.8	1843.0	288.9
	$\sigma_{s,c}$15	-4952.1	8561.8	1843.0	-144.2
	$\sigma_{cls,Max}$15	-4952.1	8561.8	1843.0	-11.3
	$\sigma_{cls,Med}$15	-4952.1	8561.8	1843.0	-4.3
167	Ft. 15	1833.4	11910.9	1843.0	499.4
	$\sigma_{s,c}$15	1833.4	11910.9	1843.0	-176.5
	$\sigma_{cls,Max}$15	1833.4	11910.9	1843.0	-14.3
	$\sigma_{cls,Med}$15	1833.4	11910.9	1843.0	0.0
184	Ft. 15	1925.3	17067.8	-432.4	650.4
	$\sigma_{s,c}$15	1925.3	17067.8	-432.4	-202.6
	$\sigma_{cls,Max}$15	1925.3	17067.8	-432.4	-16.6
	$\sigma_{cls,Med}$15	1925.3	17067.8	-432.4	0.0

Pilastro: 5/188 / L 21.32[m] / Sezione 1 B 80 [cm]H 100 [cm]

Af: 4 ø 22 + 26 ø 18 Af=81.37 [cm²] **< 1□22 x 4 V + 6□18 x 2 B + 7□18 x 2 H >**

Staffe: ø 8 4br.x6br./7.5' x 2132.1

Verifiche a Presso-Flessione S.L.U.

Nodo	Comb	N	M_{12}	M_{13}	α_{12}	α_{13}	Sd/Sr
5	2	-120450.6	-59114.8	-1675.7	1.00	1.00	0.25
23	1	-115270.2	-10450.1	-76.9	1.00	1.00	0.10
23	1	-108204.5	-6978.6	-76.9	1.00	1.00	0.09
38	4	-98677.1	-11635.0	-4763.0	1.00	1.00	0.09
38	1	-80438.1	20117.2	1680.6	1.00	1.00	0.10
52	2	-64610.3	-46964.8	-3281.4	1.00	1.00	0.21

52	2	-47400.7	-42572.5	-2030.2	1.00	1.00	0.21
73	2	-47010.7	-41262.0	-1766.5	1.00	1.00	0.20
73	2	-46974.3	-41234.1	-1702.0	1.00	1.00	0.20
90	2	-44374.3	-33138.1	-546.9	1.00	1.00	0.15
90	2	-44227.3	-33087.7	-359.6	1.00	1.00	0.15
112	2	-41627.3	-25676.5	134.8	1.00	1.00	0.11
112	2	-41486.9	-25641.6	314.8	1.00	1.00	0.11
133	2	-38886.8	-18931.3	807.6	1.00	1.00	0.08
133	2	-38748.3	-18915.0	985.5	1.00	1.00	0.08
157	2	-36148.3	-12934.1	1369.5	1.00	1.00	0.06
157	2	-35938.3	-12937.6	1554.5	1.00	1.00	0.06
168	4	-27500.7	-301.8	-8186.5	1.00	1.00	0.04
168	6	-9268.9	628.4	11215.9	1.00	2.20	0.08
188	4	-9839.2	-124.7	-38090.8	1.00	1.00	0.31

Verifiche a Taglio

Da [m]	A [m]	V_{d12} [kg]	V_{Rd12} [kg]	V_{d13} [kg]	V_{Rd13} [kg]	Staffe
0.15	21.47	20493.2	90256.6	14084.7	107061.7	ø 8 4br.x6br./7.5'

Verifiche a Presso-Flessione S.L.E.

Nodo	Comb	N [kg]	M_{12} [kgm]	M_{13} [kgm]	σ [kg/cm²]
		Combinazioni Rare			
5	Ft. 8	-90810.0	-38952.3	-1097.7	435.0
	$\sigma_{s,c}$8	-90810.0	-38952.3	-1097.7	-548.5
	$\sigma_{cls,Max}$8	-90810.0	-38952.3	-1097.7	-40.2
	$\sigma_{cls,Med}$8	-90810.0	-38952.3	-1097.7	-19.5
23	Ft. 10	-82772.1	-7391.9	2192.7	-53.1
	$\sigma_{s,c}$10	-82772.1	-7391.9	2192.7	-216.2
	$\sigma_{cls,Max}$10	-82772.1	-7391.9	2192.7	-15.0
	$\sigma_{cls,Med}$7	-85545.1	-7738.1	-84.1	-9.3
23	Ft. 10	-77904.3	-5005.0	2192.7	-64.6
	$\sigma_{s,c}$10	-77904.3	-5005.0	2192.7	-188.9
	$\sigma_{cls,Max}$10	-77904.3	-5005.0	2192.7	-13.1
	$\sigma_{cls,Med}$7	-80302.3	-5163.9	-84.1	-8.7
38	Ft. 10	-73342.5	-8682.0	-3258.0	-16.9
	$\sigma_{s,c}$10	-73342.5	-8682.0	-3258.0	-221.8
	$\sigma_{cls,Max}$10	-73342.5	-8682.0	-3258.0	-15.6
	$\sigma_{cls,Med}$7	-75740.5	-1614.3	286.0	-8.2

Nodo	Comb	N [kg]	M_{12} [kgm]	M_{13} [kgm]	σ [kg/cm²]
38	Ft. 10	-56898.7	15292.3	-1241.1	66.0
	$\sigma_{s,c}$10	-56898.7	15292.3	-1241.1	-238.4
	$\sigma_{cls,Max}$10	-56898.7	15292.3	-1241.1	-17.0
	$\sigma_{cls,Med}$7	-59320.8	15157.5	1130.9	-8.0
52	Ft. 8	-47942.3	-33249.9	-2252.2	670.2
	$\sigma_{s,c}$8	-47942.3	-33249.9	-2252.2	-479.7
	$\sigma_{cls,Max}$8	-47942.3	-33249.9	-2252.2	-36.2
	$\sigma_{cls,Med}$8	-47942.3	-33249.9	-2252.2	-16.6
52	Ft. 8	-34653.3	-27865.4	-1349.1	611.7
	$\sigma_{s,c}$8	-34653.3	-27865.4	-1349.1	-389.1
	$\sigma_{cls,Max}$8	-34653.3	-27865.4	-1349.1	-29.6
	$\sigma_{cls,Med}$8	-34653.3	-27865.4	-1349.1	-13.9
73	Ft. 8	-34353.3	-27002.6	-1165.4	581.3
	$\sigma_{s,c}$8	-34353.3	-27002.6	-1165.4	-374.9
	$\sigma_{cls,Max}$8	-34353.3	-27002.6	-1165.4	-28.5
	$\sigma_{cls,Med}$8	-34353.3	-27002.6	-1165.4	-13.4
73	Ft. 8	-34324.8	-26984.2	-1116.4	580.0
	$\sigma_{s,c}$8	-34324.8	-26984.2	-1116.4	-373.7
	$\sigma_{cls,Max}$8	-34324.8	-26984.2	-1116.4	-28.4
	$\sigma_{cls,Med}$8	-34324.8	-26984.2	-1116.4	-13.4
90	Ft. 8	-32324.8	-21659.8	-301.7	402.9
	$\sigma_{s,c}$8	-32324.8	-21659.8	-301.7	-292.0
	$\sigma_{cls,Max}$8	-32324.8	-21659.8	-301.7	-22.0
	$\sigma_{cls,Med}$8	-32324.8	-21659.8	-301.7	-10.8
90	Ft. 8	-32215.6	-21626.3	-163.0	401.1
	$\sigma_{s,c}$8	-32215.6	-21626.3	-163.0	-289.6
	$\sigma_{cls,Max}$8	-32215.6	-21626.3	-163.0	-21.8
	$\sigma_{cls,Med}$8	-32215.6	-21626.3	-163.0	-10.8
112	Ft. 8	-30215.6	-16758.4	182.2	259.1
	$\sigma_{s,c}$8	-30215.6	-16758.4	182.2	-227.9
	$\sigma_{cls,Max}$8	-30215.6	-16758.4	182.2	-17.0
	$\sigma_{cls,Med}$8	-30215.6	-16758.4	182.2	-8.4
112	Ft. 8	-30111.3	-16735.2	315.7	261.4
	$\sigma_{s,c}$8	-30111.3	-16735.2	315.7	-229.7
	$\sigma_{cls,Max}$8	-30111.3	-16735.2	315.7	-17.1
	$\sigma_{cls,Med}$8	-30111.3	-16735.2	315.7	-8.3
133	Ft. 8	-28111.3	-12334.3	662.5	147.9
	$\sigma_{s,c}$8	-28111.3	-12334.3	662.5	-178.3
	$\sigma_{cls,Max}$8	-28111.3	-12334.3	662.5	-13.1
	$\sigma_{cls,Med}$8	-28111.3	-12334.3	662.5	-6.2
133	Ft. 8	-28008.2	-12323.4	794.6	150.6

Nodo	Comb	N [kg]	M_{12} [kgm]	M_{13} [kgm]	σ [kg/cm²]
	$\sigma_{s,c}$8	-28008.2	-12323.4	794.6	-180.2
	$\sigma_{cls,Max}$8	-28008.2	-12323.4	794.6	-13.2
	$\sigma_{cls,Med}$8	-28008.2	-12323.4	794.6	-6.2
157	Ft. 8	-26008.2	-8408.6	1057.0	65.0
	$\sigma_{s,c}$8	-26008.2	-8408.6	1057.0	-132.5
	$\sigma_{cls,Max}$8	-26008.2	-8408.6	1057.0	-9.6
	$\sigma_{cls,Med}$8	-26008.2	-8408.6	1057.0	-4.3
157	Ft. 8	-25850.5	-8410.9	1194.6	68.0
	$\sigma_{s,c}$8	-25850.5	-8410.9	1194.6	-134.3
	$\sigma_{cls,Max}$8	-25850.5	-8410.9	1194.6	-9.7
	$\sigma_{cls,Med}$8	-25850.5	-8410.9	1194.6	-4.3
168	Ft. 10	-19577.4	-160.4	-5283.7	43.3
	$\sigma_{s,c}$10	-19577.4	-160.4	-5283.7	-92.1
	$\sigma_{cls,Max}$10	-19577.4	-160.4	-5283.7	-6.8
	$\sigma_{cls,Med}$10	-19577.4	-160.4	-5283.7	-3.3
168	Ft. 10	-13293.7	2934.5	-5283.7	133.0
	$\sigma_{s,c}$10	-13293.7	2934.5	-5283.7	-126.4
	$\sigma_{cls,Max}$10	-13293.7	2934.5	-5283.7	-9.5
	$\sigma_{cls,Med}$10	-13293.7	2934.5	-5283.7	-3.5
188	Ft. 10	-6530.1	-97.6	-27123.0	1117.5
	$\sigma_{s,c}$8	-7943.1	9867.4	-17414.8	-420.7
	$\sigma_{cls,Max}$8	-7943.1	9867.4	-17414.8	-33.7
	$\sigma_{cls,Med}$10	-6530.1	-97.6	-27123.0	-16.0
Combinazioni Frequenti					
5	Ft. 14	-99782.7	3619.6	4247.2	-91.2
	$\sigma_{s,c}$14	-99782.7	3619.6	4247.2	-233.5
	$\sigma_{cls,Max}$14	-99782.7	3619.6	4247.2	-16.2
	$\sigma_{cls,Med}$11	-101866.5	3840.9	383.2	-11.0
23	Ft. 13	-78738.8	-6975.6	-210.0	-69.5
	$\sigma_{s,c}$11	-88282.5	-7407.7	-178.3	-205.4
	$\sigma_{cls,Max}$11	-88282.5	-7407.7	-178.3	-14.1
	$\sigma_{cls,Med}$11	-88282.5	-7407.7	-178.3	-9.6
23	Ft. 13	-73995.9	-4651.2	-210.0	-80.6
	$\sigma_{s,c}$11	-83414.6	-5020.8	-178.3	-178.2
	$\sigma_{cls,Max}$11	-83414.6	-5020.8	-178.3	-12.2
	$\sigma_{cls,Med}$11	-83414.6	-5020.8	-178.3	-9.0
38	Ft. 13	-69434.1	-8345.0	-666.2	-38.7
	$\sigma_{s,c}$14	-76894.0	-8587.6	-1182.6	-206.4
	$\sigma_{cls,Max}$14	-76894.0	-8587.6	-1182.6	-14.4
	$\sigma_{cls,Med}$11	-78852.8	-8807.2	-673.4	-8.6
38	Ft. 13	-52733.8	15426.6	158.1	70.8
	$\sigma_{s,c}$11	-61883.8	14932.0	223.3	-227.9
	$\sigma_{cls,Max}$11	-61883.8	14932.0	223.3	-16.1

Nodo	Comb	N [kg]	M_{12} [kgm]	M_{13} [kgm]	σ [kg/cm²]
	$\sigma_{cls,Med}$11	-61883.8	14932.0	223.3	-8.0
52	Ft. 12	-53766.7	-19425.1	-1339.6	169.9
	$\sigma_{s,c}$12	-53766.7	-19425.1	-1339.6	-288.2
	$\sigma_{cls,Max}$12	-53766.7	-19425.1	-1339.6	-20.9
	$\sigma_{cls,Med}$12	-53766.7	-19425.1	-1339.6	-9.8
52	Ft. 13	-30134.8	4961.5	103.9	-7.8
	$\sigma_{s,c}$11	-38714.9	5078.7	189.8	-106.0
	$\sigma_{cls,Max}$11	-38714.9	5078.7	189.8	-7.4
	$\sigma_{cls,Med}$11	-38714.9	5078.7	189.8	-4.2
73	Ft. 13	-29834.8	4839.8	178.5	-7.5
	$\sigma_{s,c}$11	-38414.9	4951.4	287.4	-105.5
	$\sigma_{cls,Max}$11	-38414.9	4951.4	287.4	-7.3
	$\sigma_{cls,Med}$11	-38414.9	4951.4	287.4	-4.2
73	Ft. 13	-29810.3	4839.0	233.0	-7.0
	$\sigma_{s,c}$11	-38392.8	4950.6	345.1	-106.0
	$\sigma_{cls,Max}$11	-38392.8	4950.6	345.1	-7.4
	$\sigma_{cls,Med}$11	-38392.8	4950.6	345.1	-4.2
90	Ft. 13	-27810.3	4027.7	656.7	-6.1
	$\sigma_{s,c}$11	-36392.8	4102.6	915.6	-101.5
	$\sigma_{cls,Max}$11	-36392.8	4102.6	915.6	-7.1
	$\sigma_{cls,Med}$11	-36392.8	4102.6	915.6	-3.9
90	Ft. 13	-27712.1	4026.7	794.5	-4.6
	$\sigma_{s,c}$11	-36263.8	4101.4	1097.8	-103.0
	$\sigma_{cls,Max}$11	-36263.8	4101.4	1097.8	-7.2
	$\sigma_{cls,Med}$11	-36263.8	4101.4	1097.8	-3.9
112	Ft. 13	-25712.1	3216.9	878.9	-7.1
	$\sigma_{s,c}$11	-34263.8	3255.2	1114.5	-93.1
	$\sigma_{cls,Max}$11	-34263.8	3255.2	1114.5	-6.5
	$\sigma_{cls,Med}$11	-34263.8	3255.2	1114.5	-3.7
112	Ft. 13	-25618.3	3216.4	1014.0	-5.6
	$\sigma_{s,c}$11	-34140.6	3254.4	1293.2	-94.7
	$\sigma_{cls,Max}$11	-34140.6	3254.4	1293.2	-6.6
	$\sigma_{cls,Med}$11	-34140.6	3254.4	1293.2	-3.7
133	Ft. 13	-23618.3	2408.6	1143.4	-7.6
	$\sigma_{s,c}$11	-32140.6	2410.7	1390.9	-85.5
	$\sigma_{cls,Max}$11	-32140.6	2410.7	1390.9	-6.0
	$\sigma_{cls,Med}$11	-32140.6	2410.7	1390.9	-3.5
133	Ft. 13	-23525.5	2408.4	1279.0	-6.2
	$\sigma_{s,c}$11	-32019.1	2410.2	1569.8	-87.1
	$\sigma_{cls,Max}$11	-32019.1	2410.2	1569.8	-6.1
	$\sigma_{cls,Med}$11	-32019.1	2410.2	1569.8	-3.5
157	Ft. 13	-21525.4	1602.6	1310.2	-9.1

Nodo	Comb	N [kg]	M_{12} [kgm]	M_{13} [kgm]	σ [kg/cm²]
	$\sigma_{s,c}$11	-30019.1	1569.0	1570.3	-77.0
	$\sigma_{cls,Max}$11	-30019.1	1569.0	1570.3	-5.4
	$\sigma_{cls,Med}$11	-30019.1	1569.0	1570.3	-3.3
157	Ft. 13	-21378.4	1602.6	1452.6	-7.5
	$\sigma_{s,c}$11	-29841.1	1568.7	1757.5	-78.6
	$\sigma_{cls,Max}$11	-29841.1	1568.7	1757.5	-5.5
	$\sigma_{cls,Med}$11	-29841.1	1568.7	1757.5	-3.2
168	Ft. 13	-16518.3	-327.3	1514.7	-9.3
	$\sigma_{s,c}$11	-24981.0	-444.9	1737.5	-61.3
	$\sigma_{cls,Max}$12	-24247.7	-544.7	1770.1	-4.3
	$\sigma_{cls,Med}$11	-24981.0	-444.9	1737.5	-2.7
168	Ft. 13	-10734.6	2517.6	1514.7	27.1
	$\sigma_{s,c}$11	-18697.3	2649.9	1737.5	-69.6
	$\sigma_{cls,Max}$11	-18697.3	2649.9	1737.5	-5.0
	$\sigma_{cls,Med}$11	-18697.3	2649.9	1737.5	-2.1
188	Ft. 14	-11417.7	-50.1	-22991.4	873.7
	$\sigma_{s,c}$12	-11700.3	1942.9	-21049.7	-338.9
	$\sigma_{cls,Max}$12	-11700.3	1942.9	-21049.7	-27.9
	$\sigma_{cls,Med}$14	-11417.7	-50.1	-22991.4	-13.8
	Combinazioni Quasi Permanenti				
5	Ft. 15	-91852.6	-38476.9	-1092.8	413.4
	$\sigma_{s,c}$15	-91852.6	-38476.9	-1092.8	-542.7
	$\sigma_{cls,Max}$15	-91852.6	-38476.9	-1092.8	-39.7
	$\sigma_{cls,Med}$15	-91852.6	-38476.9	-1092.8	-19.2
23	Ft. 15	-78268.5	-7531.2	-36.7	-65.7
	$\sigma_{s,c}$15	-78268.5	-7531.2	-36.7	-188.9
	$\sigma_{cls,Max}$15	-78268.5	-7531.2	-36.7	-13.0
	$\sigma_{cls,Med}$15	-78268.5	-7531.2	-36.7	-8.5
23	Ft. 15	-73025.7	-4957.0	-36.7	-78.2
	$\sigma_{s,c}$15	-73025.7	-4957.0	-36.7	-159.4
	$\sigma_{cls,Max}$15	-73025.7	-4957.0	-36.7	-10.9
	$\sigma_{cls,Med}$15	-73025.7	-4957.0	-36.7	-7.9
38	Ft. 15	-68463.9	3679.0	940.8	-72.3
	$\sigma_{s,c}$15	-68463.9	3679.0	940.8	-150.5
	$\sigma_{cls,Max}$15	-68463.9	3679.0	940.8	-10.3
	$\sigma_{cls,Med}$15	-68463.9	3679.0	940.8	-7.4
38	Ft. 15	-53297.2	14645.8	1702.6	74.6
	$\sigma_{s,c}$15	-53297.2	14645.8	1702.6	-233.7
	$\sigma_{cls,Max}$15	-53297.2	14645.8	1702.6	-16.7
	$\sigma_{cls,Med}$15	-53297.2	14645.8	1702.6	-7.6
52	Ft. 15	-47097.2	-34952.5	-2091.4	735.0
	$\sigma_{s,c}$15	-47097.2	-34952.5	-2091.4	-497.6
	$\sigma_{cls,Max}$15	-47097.2	-34952.5	-2091.4	-37.7

Nodo	Comb	N [kg]	M_{12} [kgm]	M_{13} [kgm]	σ [kg/cm²]
	$\sigma_{cls,Med}$15	-47097.2	-34952.5	-2091.4	-17.4
52	Ft. 15	-32501.9	-27270.4	-1371.4	615.5
	$\sigma_{s,c}$15	-32501.9	-27270.4	-1371.4	-380.9
	$\sigma_{cls,Max}$15	-32501.9	-27270.4	-1371.4	-29.1
	$\sigma_{cls,Med}$15	-32501.9	-27270.4	-1371.4	-13.6
73	Ft. 15	-32201.9	-26428.3	-1195.8	585.9
	$\sigma_{s,c}$15	-32201.9	-26428.3	-1195.8	-367.1
	$\sigma_{cls,Max}$15	-32201.9	-26428.3	-1195.8	-28.0
	$\sigma_{cls,Med}$15	-32201.9	-26428.3	-1195.8	-13.1
73	Ft. 15	-32175.8	-26409.8	-1143.6	584.5
	$\sigma_{s,c}$15	-32175.8	-26409.8	-1143.6	-365.8
	$\sigma_{cls,Max}$15	-32175.8	-26409.8	-1143.6	-27.9
	$\sigma_{cls,Med}$15	-32175.8	-26409.8	-1143.6	-13.1
90	Ft. 15	-30175.8	-21223.1	-387.9	412.3
	$\sigma_{s,c}$15	-30175.8	-21223.1	-387.9	-286.8
	$\sigma_{cls,Max}$15	-30175.8	-21223.1	-387.9	-21.7
	$\sigma_{cls,Med}$15	-30175.8	-21223.1	-387.9	-10.6
90	Ft. 15	-30081.8	-21189.5	-262.2	410.0
	$\sigma_{s,c}$15	-30081.8	-21189.5	-262.2	-284.2
	$\sigma_{cls,Max}$15	-30081.8	-21189.5	-262.2	-21.5
	$\sigma_{cls,Med}$15	-30081.8	-21189.5	-262.2	-10.5
112	Ft. 15	-28081.8	-16459.1	115.3	269.1
	$\sigma_{s,c}$15	-28081.8	-16459.1	115.3	-222.3
	$\sigma_{cls,Max}$15	-28081.8	-16459.1	115.3	-16.6
	$\sigma_{cls,Med}$15	-28081.8	-16459.1	115.3	-8.2
112	Ft. 15	-27992.1	-16435.8	236.1	270.8
	$\sigma_{s,c}$15	-27992.1	-16435.8	236.1	-223.6
	$\sigma_{cls,Max}$15	-27992.1	-16435.8	236.1	-16.7
	$\sigma_{cls,Med}$15	-27992.1	-16435.8	236.1	-8.2
133	Ft. 15	-25992.1	-12172.6	602.9	159.6
	$\sigma_{s,c}$15	-25992.1	-12172.6	602.9	-174.7
	$\sigma_{cls,Max}$15	-25992.1	-12172.6	602.9	-12.9
	$\sigma_{cls,Med}$15	-25992.1	-12172.6	602.9	-6.1
133	Ft. 15	-25903.4	-12161.6	722.5	162.0
	$\sigma_{s,c}$15	-25903.4	-12161.6	722.5	-176.4
	$\sigma_{cls,Max}$15	-25903.4	-12161.6	722.5	-13.0
	$\sigma_{cls,Med}$15	-25903.4	-12161.6	722.5	-6.1
157	Ft. 15	-23903.4	-8384.6	998.8	75.6
	$\sigma_{s,c}$15	-23903.4	-8384.6	998.8	-130.6
	$\sigma_{cls,Max}$15	-23903.4	-8384.6	998.8	-9.5
	$\sigma_{cls,Med}$15	-23903.4	-8384.6	998.8	-4.2

Nodo	Comb	N [kg]	M_{12} [kgm]	M_{13} [kgm]	σ [kg/cm²]
157	Ft. 15	-23761.2	-8386.8	1123.4	78.5
	$\sigma_{s,c}$15	-23761.2	-8386.8	1123.4	-132.4
	$\sigma_{cls,Max}$15	-23761.2	-8386.8	1123.4	-9.6
	$\sigma_{cls,Med}$15	-23761.2	-8386.8	1123.4	-4.2
168	Ft. 15	-18901.1	-1768.3	1870.4	2.1
	$\sigma_{s,c}$15	-18901.1	-1768.3	1870.4	-63.6
	$\sigma_{cls,Max}$15	-18901.1	-1768.3	1870.4	-4.5
	$\sigma_{cls,Med}$15	-18901.1	-1768.3	1870.4	-2.1
168	Ft. 15	-11117.4	2073.2	1870.4	25.2
	$\sigma_{s,c}$15	-11117.4	2073.2	1870.4	-57.6
	$\sigma_{cls,Max}$15	-11117.4	2073.2	1870.4	-4.2
	$\sigma_{cls,Med}$15	-11117.4	2073.2	1870.4	-1.6
188	Ft. 15	-4353.8	9836.0	-16021.5	860.4
	$\sigma_{s,c}$15	-4353.8	9836.0	-16021.5	-398.2
	$\sigma_{cls,Max}$15	-4353.8	9836.0	-16021.5	-32.0
	$\sigma_{cls,Med}$15	-4353.8	9836.0	-16021.5	-10.8

Pilastro: 6/192 / L 21.32[m] / Sezione 1 B 80 [cm]H 100 [cm]

Af: 4 ø 22 + 26 ø 18 Af=81.37 [cm²] **< 1□22 x 4 V + 6□18 x 2 B + 7□18 x 2 H >**

Staffe: ø 8 4br.x6br./7.5' x 2132.1

Verifiche a Presso-Flessione S.L.U.

Nodo	Comb	N	M_{12}	M_{13}	α_{12}	α_{13}	Sd/Sr
6	2	-89775.2	-40677.9	-1855.5	1.00	1.00	0.17
24	2	-72355.2	-23171.2	678.8	1.00	1.00	0.10
24	2	-71102.2	-22605.4	678.8	1.00	1.00	0.10
56	1	-62814.7	-7216.6	197.8	1.00	1.00	0.06
56	2	-35691.3	-28368.3	-1948.0	1.00	1.00	0.13
94	2	-32701.3	-22592.3	-1645.3	1.00	1.00	0.10
94	2	-32552.5	-22563.5	-1784.0	1.00	1.00	0.10
116	2	-29952.5	-17848.6	-1203.5	1.00	1.00	0.08
116	2	-29809.8	-17825.9	-1338.6	1.00	1.00	0.08
137	2	-27209.8	-13418.0	-1135.1	1.00	1.00	0.06
137	2	-27068.1	-13403.4	-1269.7	1.00	1.00	0.06
161	2	-24468.1	-9323.3	-1368.8	1.00	1.00	0.04
161	2	-24338.0	-9317.9	-1500.8	1.00	1.00	0.04

169	4	-18395.3	-437.4	-9427.5	1.00	1.00	0.05
169	5	-6249.8	952.9	26049.7	2.04	4.49	0.22
192	3	-12623.5	6959.3	34783.5	1.00	1.00	0.28

Verifiche a Taglio

Da [m]	A [m]	V_{d12} [kg]	V_{Rd12} [kg]	V_{d13} [kg]	V_{Rd13} [kg]	Staffe
0.15	21.47	9460.0	90256.6	13911.9	107061.7	ø 8 4br.x6br./7.5'

Verifiche a Presso-Flessione S.L.E.

Nodo	Comb	N [kg]	M_{12} [kgm]	M_{13} [kgm]	σ [kg/cm²]
		Combinazioni Rare			
6	Ft. 8	-67902.9	-27095.3	-1243.3	274.9
	$\sigma_{s,c}$ 8	-67902.9	-27095.3	-1243.3	-390.4
	$\sigma_{cls,Max}$ 8	-67902.9	-27095.3	-1243.3	-28.5
	$\sigma_{cls,Med}$ 8	-67902.9	-27095.3	-1243.3	-13.6
24	Ft. 8	-54502.9	-15661.7	430.4	71.2
	$\sigma_{s,c}$ 8	-54502.9	-15661.7	430.4	-230.6
	$\sigma_{cls,Max}$ 8	-54502.9	-15661.7	430.4	-16.5
	$\sigma_{cls,Med}$ 8	-54502.9	-15661.7	430.4	-8.0
24	Ft. 8	-53539.1	-15226.5	430.4	67.2
	$\sigma_{s,c}$ 8	-53539.1	-15226.5	430.4	-224.8
	$\sigma_{cls,Max}$ 8	-53539.1	-15226.5	430.4	-16.1
	$\sigma_{cls,Med}$ 8	-53539.1	-15226.5	430.4	-7.8
56	Ft. 8	-42839.1	-6102.5	-85.2	-19.4
	$\sigma_{s,c}$ 10	-45539.6	-3724.4	-2358.5	-127.5
	$\sigma_{cls,Max}$ 10	-45539.6	-3724.4	-2358.5	-8.9
	$\sigma_{cls,Med}$ 9	-47704.4	-4553.2	194.8	-5.2
56	Ft. 8	-26410.7	-18826.8	-1373.2	389.4
	$\sigma_{s,c}$ 8	-26410.7	-18826.8	-1373.2	-273.1
	$\sigma_{cls,Max}$ 8	-26410.7	-18826.8	-1373.2	-20.7
	$\sigma_{cls,Med}$ 8	-26410.7	-18826.8	-1373.2	-9.4
94	Ft. 8	-24110.7	-15003.6	-1172.4	279.3
	$\sigma_{s,c}$ 8	-24110.7	-15003.6	-1172.4	-220.2
	$\sigma_{cls,Max}$ 8	-24110.7	-15003.6	-1172.4	-16.5
	$\sigma_{cls,Med}$ 8	-24110.7	-15003.6	-1172.4	-7.5
94	Ft. 8	-24000.8	-14984.4	-1273.5	281.7
	$\sigma_{s,c}$ 8	-24000.8	-14984.4	-1273.5	-221.7
	$\sigma_{cls,Max}$ 8	-24000.8	-14984.4	-1273.5	-16.6
	$\sigma_{cls,Med}$ 8	-24000.8	-14984.4	-1273.5	-7.5
116	Ft. 8	-22000.8	-11865.1	-865.6	190.5
	$\sigma_{s,c}$ 8	-22000.8	-11865.1	-865.6	-173.9

Nodo	Comb	N [kg]	M_{12} [kgm]	M_{13} [kgm]	σ [kg/cm²]
	$\sigma_{cls,Max}$8	-22000.8	-11865.1	-865.6	-12.9
	$\sigma_{cls,Med}$8	-22000.8	-11865.1	-865.6	-5.9
116	Ft. 8	-21895.5	-11850.0	-964.0	192.9
	$\sigma_{s,c}$8	-21895.5	-11850.0	-964.0	-175.3
	$\sigma_{cls,Max}$8	-21895.5	-11850.0	-964.0	-13.1
	$\sigma_{cls,Med}$8	-21895.5	-11850.0	-964.0	-5.9
137	Ft. 8	-19895.5	-8935.3	-811.3	116.6
	$\sigma_{s,c}$8	-19895.5	-8935.3	-811.3	-134.2
	$\sigma_{cls,Max}$8	-19895.5	-8935.3	-811.3	-9.9
	$\sigma_{cls,Med}$8	-19895.5	-8935.3	-811.3	-4.5
137	Ft. 8	-19790.9	-8925.7	-909.3	118.9
	$\sigma_{s,c}$8	-19790.9	-8925.7	-909.3	-135.6
	$\sigma_{cls,Max}$8	-19790.9	-8925.7	-909.3	-10.0
	$\sigma_{cls,Med}$8	-19790.9	-8925.7	-909.3	-4.5
161	Ft. 8	-17790.9	-6229.6	-951.6	59.4
	$\sigma_{s,c}$8	-17790.9	-6229.6	-951.6	-100.0
	$\sigma_{cls,Max}$8	-17790.9	-6229.6	-951.6	-7.3
	$\sigma_{cls,Med}$8	-17790.9	-6229.6	-951.6	-3.2
161	Ft. 8	-17695.6	-6226.0	-1047.3	61.5
	$\sigma_{s,c}$8	-17695.6	-6226.0	-1047.3	-101.3
	$\sigma_{cls,Max}$8	-17695.6	-6226.0	-1047.3	-7.4
	$\sigma_{cls,Med}$8	-17695.6	-6226.0	-1047.3	-3.2
169	Ft. 10	-13085.9	-363.6	-6219.5	129.1
	$\sigma_{s,c}$10	-13085.9	-363.6	-6219.5	-105.5
	$\sigma_{cls,Max}$10	-13085.9	-363.6	-6219.5	-8.1
	$\sigma_{cls,Med}$10	-13085.9	-363.6	-6219.5	-3.9
169	Ft. 10	-11733.0	270.4	-6219.5	141.2
	$\sigma_{s,c}$10	-11733.0	270.4	-6219.5	-103.3
	$\sigma_{cls,Max}$10	-11733.0	270.4	-6219.5	-8.0
	$\sigma_{cls,Med}$10	-11733.0	270.4	-6219.5	-3.9
192	Ft. 8	-4723.3	7559.8	22735.7	1094.2
	$\sigma_{s,c}$8	-4723.3	7559.8	22735.7	-453.5
	$\sigma_{cls,Max}$8	-4723.3	7559.8	22735.7	-37.1
	$\sigma_{cls,Med}$9	-8156.3	4596.6	25144.2	-15.1
	Combinazioni Frequenti				
6	Ft. 12	-72914.1	-5776.3	-202.8	-69.8
	$\sigma_{s,c}$12	-72914.1	-5776.3	-202.8	-167.4
	$\sigma_{cls,Max}$12	-72914.1	-5776.3	-202.8	-11.5
	$\sigma_{cls,Med}$11	-74337.9	-338.8	67.5	-8.1
24	Ft. 12	-59514.1	-4596.5	38.5	-59.1
	$\sigma_{s,c}$12	-59514.1	-4596.5	38.5	-134.5
	$\sigma_{cls,Max}$12	-59514.1	-4596.5	38.5	-9.2
	$\sigma_{cls,Med}$11	-60937.9	-1893.8	-56.8	-6.6

Nodo	Comb	N [kg]	M_{12} [kgm]	M_{13} [kgm]	σ [kg/cm²]
24	Ft. 12	-58550.2	-4161.3	38.5	-61.1
	$\sigma_{s,c}$ 12	-58550.2	-4161.3	38.5	-129.4
	$\sigma_{cls,Max}$ 12	-58550.2	-4161.3	38.5	-8.9
	$\sigma_{cls,Med}$ 11	-59974.1	-1458.7	-56.8	-6.5
56	Ft. 13	-42263.2	-3061.5	328.6	-40.7
	$\sigma_{s,c}$ 12	-47850.2	-3204.5	371.2	-107.5
	$\sigma_{cls,Max}$ 12	-47850.2	-3204.5	371.2	-7.4
	$\sigma_{cls,Med}$ 11	-49274.1	-2680.6	484.3	-5.3
56	Ft. 12	-29348.6	-3197.0	-1112.5	-10.9
	$\sigma_{s,c}$ 12	-29348.6	-3197.0	-1112.5	-84.6
	$\sigma_{cls,Max}$ 12	-29348.6	-3197.0	-1112.5	-5.9
	$\sigma_{cls,Med}$ 11	-29597.9	813.5	-1026.9	-3.2
94	Ft. 12	-27048.6	-2574.6	-1262.8	-10.7
	$\sigma_{s,c}$ 12	-27048.6	-2574.6	-1262.8	-77.3
	$\sigma_{cls,Max}$ 12	-27048.6	-2574.6	-1262.8	-5.4
	$\sigma_{cls,Med}$ 11	-27297.9	621.7	-1259.1	-3.0
94	Ft. 12	-26918.4	-2571.2	-1389.1	-9.3
	$\sigma_{s,c}$ 12	-26918.4	-2571.2	-1389.1	-78.3
	$\sigma_{cls,Max}$ 12	-26918.4	-2571.2	-1389.1	-5.5
	$\sigma_{cls,Med}$ 11	-27164.6	621.2	-1389.2	-2.9
116	Ft. 12	-24918.4	-2071.7	-1046.7	-13.4
	$\sigma_{s,c}$ 12	-24918.4	-2071.7	-1046.7	-67.6
	$\sigma_{cls,Max}$ 12	-24918.4	-2071.7	-1046.7	-4.7
	$\sigma_{cls,Med}$ 11	-25164.6	453.6	-1070.5	-2.7
116	Ft. 12	-24793.4	-2069.1	-1169.8	-12.0
	$\sigma_{s,c}$ 12	-24793.4	-2069.1	-1169.8	-68.6
	$\sigma_{cls,Max}$ 12	-24793.4	-2069.1	-1169.8	-4.8
	$\sigma_{cls,Med}$ 11	-25036.7	453.1	-1197.3	-2.7
137	Ft. 12	-22793.4	-1611.0	-918.7	-15.0
	$\sigma_{s,c}$ 12	-22793.4	-1611.0	-918.7	-59.2
	$\sigma_{cls,Max}$ 12	-22793.4	-1611.0	-918.7	-4.1
	$\sigma_{cls,Med}$ 11	-23036.7	284.9	-927.2	-2.5
137	Ft. 12	-22669.4	-1609.4	-1041.2	-13.6
	$\sigma_{s,c}$ 12	-22669.4	-1609.4	-1041.2	-60.2
	$\sigma_{cls,Max}$ 12	-22669.4	-1609.4	-1041.2	-4.2
	$\sigma_{cls,Med}$ 11	-22909.8	284.5	-1053.4	-2.5
161	Ft. 12	-20669.4	-1195.5	-739.9	-16.7
	$\sigma_{s,c}$ 12	-20669.4	-1195.5	-739.9	-50.6
	$\sigma_{cls,Max}$ 12	-20669.4	-1195.5	-739.9	-3.5
	$\sigma_{cls,Med}$ 11	-20909.8	115.7	-673.7	-2.3
161	Ft. 12	-20554.3	-1195.1	-860.4	-15.3

Nodo	Comb	N [kg]	M_{12} [kgm]	M_{13} [kgm]	σ [kg/cm²]
	$\sigma_{s,c}$12	-20554.3	-1195.1	-860.4	-51.6
	$\sigma_{cls,Max}$12	-20554.3	-1195.1	-860.4	-3.6
	$\sigma_{cls,Med}$11	-20791.7	115.3	-797.9	-2.3
169	Ft. 13	-9729.2	-371.6	547.5	-7.4
	$\sigma_{s,c}$14	-15744.3	-324.2	-736.2	-35.5
	$\sigma_{cls,Max}$14	-15744.3	-324.2	-736.2	-2.5
	$\sigma_{cls,Med}$11	-15931.7	-290.8	630.4	-1.7
169	Ft. 13	-8380.4	261.8	547.5	-6.1
	$\sigma_{s,c}$14	-14394.5	309.6	-736.2	-33.2
	$\sigma_{cls,Max}$14	-14394.5	309.6	-736.2	-2.3
	$\sigma_{cls,Med}$11	-14582.7	343.0	630.4	-1.6
192	Ft. 12	-7581.7	1509.0	23954.0	987.9
	$\sigma_{s,c}$12	-7581.7	1509.0	23954.0	-364.6
	$\sigma_{cls,Max}$12	-7581.7	1509.0	23954.0	-30.5
	$\sigma_{cls,Med}$11	-7819.0	-18.6	24000.9	-14.3
	Combinazioni Quasi Permanenti				
6	Ft. 15	-66785.9	-26705.3	-1225.6	271.9
	$\sigma_{s,c}$15	-66785.9	-26705.3	-1225.6	-384.8
	$\sigma_{cls,Max}$15	-66785.9	-26705.3	-1225.6	-28.1
	$\sigma_{cls,Med}$15	-66785.9	-26705.3	-1225.6	-13.4
24	Ft. 15	-53385.9	-15822.7	425.9	78.8
	$\sigma_{s,c}$15	-53385.9	-15822.7	425.9	-231.4
	$\sigma_{cls,Max}$15	-53385.9	-15822.7	425.9	-16.6
	$\sigma_{cls,Med}$15	-53385.9	-15822.7	425.9	-8.1
24	Ft. 15	-52422.0	-15387.5	425.9	74.7
	$\sigma_{s,c}$15	-52422.0	-15387.5	425.9	-225.6
	$\sigma_{cls,Max}$15	-52422.0	-15387.5	425.9	-16.1
	$\sigma_{cls,Med}$15	-52422.0	-15387.5	425.9	-7.9
56	Ft. 15	-41722.0	-6704.3	-122.2	-12.3
	$\sigma_{s,c}$15	-41722.0	-6704.3	-122.2	-123.4
	$\sigma_{cls,Max}$15	-41722.0	-6704.3	-122.2	-8.6
	$\sigma_{cls,Med}$15	-41722.0	-6704.3	-122.2	-4.5
56	Ft. 15	-23753.2	-18531.7	-1255.4	406.0
	$\sigma_{s,c}$15	-23753.2	-18531.7	-1255.4	-265.9
	$\sigma_{cls,Max}$15	-23753.2	-18531.7	-1255.4	-20.2
	$\sigma_{cls,Med}$15	-23753.2	-18531.7	-1255.4	-9.2
94	Ft. 15	-21453.2	-14753.0	-1010.5	295.6
	$\sigma_{s,c}$15	-21453.2	-14753.0	-1010.5	-213.1
	$\sigma_{cls,Max}$15	-21453.2	-14753.0	-1010.5	-16.1
	$\sigma_{cls,Med}$15	-21453.2	-14753.0	-1010.5	-7.4
94	Ft. 15	-21355.9	-14733.8	-1096.2	297.7
	$\sigma_{s,c}$15	-21355.9	-14733.8	-1096.2	-214.4
	$\sigma_{cls,Max}$15	-21355.9	-14733.8	-1096.2	-16.2

Nodo	Comb	N [kg]	M_{12} [kgm]	M_{13} [kgm]	σ [kg/cm²]
	$\sigma_{cls,Med}$15	-21355.9	-14733.8	-1096.2	-7.4
116	Ft. 15	-19355.9	-11653.1	-729.6	207.1
	$\sigma_{s,c}$15	-19355.9	-11653.1	-729.6	-168.1
	$\sigma_{cls,Max}$15	-19355.9	-11653.1	-729.6	-12.6
	$\sigma_{cls,Med}$15	-19355.9	-11653.1	-729.6	-5.8
116	Ft. 15	-19262.5	-11637.9	-813.0	209.1
	$\sigma_{s,c}$15	-19262.5	-11637.9	-813.0	-169.3
	$\sigma_{cls,Max}$15	-19262.5	-11637.9	-813.0	-12.7
	$\sigma_{cls,Med}$15	-19262.5	-11637.9	-813.0	-5.8
137	Ft. 15	-17262.5	-8761.8	-694.2	132.2
	$\sigma_{s,c}$15	-17262.5	-8761.8	-694.2	-129.6
	$\sigma_{cls,Max}$15	-17262.5	-8761.8	-694.2	-9.6
	$\sigma_{cls,Med}$15	-17262.5	-8761.8	-694.2	-4.4
137	Ft. 15	-17169.8	-8752.0	-777.3	134.2
	$\sigma_{s,c}$15	-17169.8	-8752.0	-777.3	-130.8
	$\sigma_{cls,Max}$15	-17169.8	-8752.0	-777.3	-9.7
	$\sigma_{cls,Med}$15	-17169.8	-8752.0	-777.3	-4.4
161	Ft. 15	-15169.8	-6094.5	-866.4	72.3
	$\sigma_{s,c}$15	-15169.8	-6094.5	-866.4	-96.6
	$\sigma_{cls,Max}$15	-15169.8	-6094.5	-866.4	-7.1
	$\sigma_{cls,Med}$15	-15169.8	-6094.5	-866.4	-3.1
161	Ft. 15	-15087.1	-6090.8	-946.5	74.2
	$\sigma_{s,c}$15	-15087.1	-6090.8	-946.5	-97.7
	$\sigma_{cls,Max}$15	-15087.1	-6090.8	-946.5	-7.2
	$\sigma_{cls,Med}$15	-15087.1	-6090.8	-946.5	-3.1
169	Ft. 15	-10227.0	-525.0	-1684.8	5.1
	$\sigma_{s,c}$15	-10227.0	-525.0	-1684.8	-38.0
	$\sigma_{cls,Max}$15	-10227.0	-525.0	-1684.8	-2.7
	$\sigma_{cls,Med}$15	-10227.0	-525.0	-1684.8	-1.2
169	Ft. 15	-8878.6	119.6	-1684.8	4.4
	$\sigma_{s,c}$15	-8878.6	119.6	-1684.8	-32.6
	$\sigma_{cls,Max}$15	-8878.6	119.6	-1684.8	-2.3
	$\sigma_{cls,Med}$15	-8878.6	119.6	-1684.8	-1.1
192	Ft. 15	-2115.0	7478.5	20848.8	1044.9
	$\sigma_{s,c}$15	-2115.0	7478.5	20848.8	-423.1
	$\sigma_{cls,Max}$15	-2115.0	7478.5	20848.8	-34.7
	$\sigma_{cls,Med}$15	-2115.0	7478.5	20848.8	-12.8

Pilastro: 11/58 / L 11.80[m] / Sezione 1 B 80 [cm]H 100 [cm]

Af: 4 ø 22 + 26 ø 18 Af=81.37 [cm²] **< 1□22 x 4 V + 6□18 x 2 B + 7□18 x 2 H >**

Staffe: ø 8 4br.x6br./7.5' x 1180.0

Verifiche a Presso-Flessione S.L.U.

Nodo	Comb	N	M_{12}	M_{13}	α_{12}	α_{13}	Sd/Sr
11	2	-36111.0	-57315.2	-166.4	1.00	1.00	0.32
58	2	-4781.0	25239.9	821.1	1.00	1.00	0.17

Verifiche a Taglio

Da [m]	A [m]	V_{d12} [kg]	V_{Rd12} [kg]	V_{d13} [kg]	V_{Rd13} [kg]	Staffe
0.12	11.93	34084.4	90256.6	17708.1	107061.7	ø 8 4br.x6br./7.5'

Verifiche a Presso-Flessione S.L.E.

Nodo	Comb	N [kg]	M_{12} [kgm]	M_{13} [kgm]	σ [kg/cm²]
		Combinazioni Rare			
11	Ft. 8	-28182.3	-38349.4	-144.9	1036.0
	$\sigma_{s,c}$8	-28182.3	-38349.4	-144.9	-486.9
	$\sigma_{cls,Max}$8	-28182.3	-38349.4	-144.9	-37.8
	$\sigma_{cls,Med}$8	-28182.3	-38349.4	-144.9	-18.8
58	Ft. 8	-4082.3	16747.2	589.4	565.0
	$\sigma_{s,c}$8	-4082.3	16747.2	589.4	-212.3
	$\sigma_{cls,Max}$8	-4082.3	16747.2	589.4	-17.0
	$\sigma_{cls,Med}$8	-4082.3	16747.2	589.4	-8.0
		Combinazioni Frequenti			
11	Ft. 12	-31313.6	-8838.0	-151.4	36.8
	$\sigma_{s,c}$12	-31313.6	-8838.0	-151.4	-129.5
	$\sigma_{cls,Max}$12	-31313.6	-8838.0	-151.4	-9.2
	$\sigma_{cls,Med}$12	-31313.6	-8838.0	-151.4	-4.5
58	Ft. 12	-7213.6	2823.6	442.9	32.9
	$\sigma_{s,c}$12	-7213.6	2823.6	442.9	-45.4
	$\sigma_{cls,Max}$12	-7213.6	2823.6	442.9	-3.3
	$\sigma_{cls,Med}$12	-7213.6	2823.6	442.9	-1.4
		Combinazioni Quasi Permanenti			
11	Ft. 15	-28820.4	-38324.9	-152.1	1027.6
	$\sigma_{s,c}$15	-28820.4	-38324.9	-152.1	-487.5
	$\sigma_{cls,Max}$15	-28820.4	-38324.9	-152.1	-37.8
	$\sigma_{cls,Med}$15	-28820.4	-38324.9	-152.1	-18.8
58	Ft. 15	-4720.4	16805.5	610.2	559.4
	$\sigma_{s,c}$15	-4720.4	16805.5	610.2	-214.3
	$\sigma_{cls,Max}$15	-4720.4	16805.5	610.2	-17.1
	$\sigma_{cls,Med}$15	-4720.4	16805.5	610.2	-8.0

Pilastro: 13/203 / L 21.65[m] / Sezione 4 B 80 [cm]H 80 [cm]

Af: 18 ø 22 Af=68.42 [cm²] **< 1□22 x 4 V + 3□22 x 2 B + 4□22 x 2 H >**

Staffe: ø 10 4br./12.5' x 2165.4

Verifiche a Presso-Flessione S.L.U.

Nodo	Comb	N	M_{12}	M_{13}	α_{12}	α_{13}	Sd/Sr
13	2	-32492.5	-37103.1	500.6	1.00	1.00	0.31
31	4	-37429.2	816.7	9827.3	1.00	1.00	0.07
31	4	-35262.8	-205.6	9827.3	1.00	1.00	0.07
41	2	-30041.0	22985.1	-1275.4	1.00	1.00	0.18
41	2	-4234.9	-23815.2	-1436.9	1.00	1.00	0.25
87	2	-4006.7	-7883.1	-1251.2	1.00	1.00	0.08
87	2	-3969.3	-8090.2	-1251.6	1.00	1.00	0.08
108	4	-3298.7	-486.3	-8141.4	1.00	1.00	0.08
108	4	-3200.7	-506.1	-8186.1	1.00	1.00	0.08
130	4	-3200.7	-384.6	-10685.7	1.00	1.00	0.10
130	4	-3102.4	-404.9	-10721.7	1.00	1.00	0.10
151	4	-3102.4	-281.2	-12322.2	1.00	1.00	0.12
151	4	-3004.1	-302.1	-12346.0	1.00	1.00	0.12
164	4	-3004.1	-70.5	-12973.3	1.00	1.00	0.13
164	4	-2941.1	-88.6	-12981.4	1.00	1.00	0.13
197	2	-3307.0	24310.1	-596.8	1.00	1.00	0.25
197	2	-4922.8	19479.1	-600.3	1.00	1.00	0.20
203	2	-4922.8	23962.5	-572.2	1.00	1.00	0.24

Verifiche a Taglio

Da [m]	A [m]	V_{d12} [kg]	V_{Rd12} [kg]	V_{d13} [kg]	V_{Rd13} [kg]	Staffe
0.15	21.80	12351.7	66913.5	9125.6	66913.5	ø 10 4br./12.5'

Verifiche a Presso-Flessione S.L.E.

Nodo	Comb	N [kg]	M_{12} [kgm]	M_{13} [kgm]	σ [kg/cm²]
		Combinazioni Rare			
13	Ft. 8	-24513.9	-24818.0	333.1	1025.7
	$\sigma_{s,c}$8	-24513.9	-24818.0	333.1	-489.5
	$\sigma_{cls,Max}$8	-24513.9	-24818.0	333.1	-39.7
	$\sigma_{cls,Med}$8	-24513.9	-24818.0	333.1	-19.5
31	Ft. 10	-27783.2	595.8	6559.6	52.3

Nodo	Comb	N [kg]	M_{12} [kgm]	M_{13} [kgm]	σ [kg/cm²]
	$\sigma_{s,c}$10	-27783.2	595.8	6559.6	-151.6
	$\sigma_{cls,Max}$10	-27783.2	595.8	6559.6	-11.1
	$\sigma_{cls,Med}$10	-27783.2	595.8	6559.6	-5.2
31	Ft. 10	-26116.7	-190.6	6559.6	54.4
	$\sigma_{s,c}$10	-26116.7	-190.6	6559.6	-143.4
	$\sigma_{cls,Max}$10	-26116.7	-190.6	6559.6	-10.5
	$\sigma_{cls,Med}$10	-26116.7	-190.6	6559.6	-5.1
41	Ft. 8	-22628.2	15314.7	-895.7	543.0
	$\sigma_{s,c}$8	-22628.2	15314.7	-895.7	-327.4
	$\sigma_{cls,Max}$8	-22628.2	15314.7	-895.7	-25.9
	$\sigma_{cls,Med}$8	-22628.2	15314.7	-895.7	-12.2
41	Ft. 8	-2909.5	-15911.2	-997.4	873.7
	$\sigma_{s,c}$8	-2909.5	-15911.2	-997.4	-313.7
	$\sigma_{cls,Max}$8	-2909.5	-15911.2	-997.4	-26.4
	$\sigma_{cls,Med}$8	-2909.5	-15911.2	-997.4	-12.2
87	Ft. 8	-2734.0	-5285.8	-868.0	277.9
	$\sigma_{s,c}$8	-2734.0	-5285.8	-868.0	-121.3
	$\sigma_{cls,Max}$8	-2734.0	-5285.8	-868.0	-9.9
	$\sigma_{cls,Med}$8	-2734.0	-5285.8	-868.0	-4.1
87	Ft. 8	-2702.3	-5424.7	-868.2	286.2
	$\sigma_{s,c}$8	-2702.3	-5424.7	-868.2	-123.7
	$\sigma_{cls,Max}$8	-2702.3	-5424.7	-868.2	-10.2
	$\sigma_{cls,Med}$8	-2702.3	-5424.7	-868.2	-4.3
108	Ft. 10	-2255.2	-352.5	-5459.5	262.8
	$\sigma_{s,c}$10	-2255.2	-352.5	-5459.5	-104.9
	$\sigma_{cls,Max}$10	-2255.2	-352.5	-5459.5	-8.7
	$\sigma_{cls,Med}$10	-2255.2	-352.5	-5459.5	-4.0
108	Ft. 10	-2179.5	-366.9	-5489.4	265.9
	$\sigma_{s,c}$10	-2179.5	-366.9	-5489.4	-105.6
	$\sigma_{cls,Max}$10	-2179.5	-366.9	-5489.4	-8.8
	$\sigma_{cls,Med}$10	-2179.5	-366.9	-5489.4	-4.0
130	Ft. 10	-2179.5	-281.7	-7153.8	350.6
	$\sigma_{s,c}$10	-2179.5	-281.7	-7153.8	-130.8
	$\sigma_{cls,Max}$10	-2179.5	-281.7	-7153.8	-11.0
	$\sigma_{cls,Med}$10	-2179.5	-281.7	-7153.8	-5.2
130	Ft. 10	-2103.5	-296.6	-7177.8	353.4
	$\sigma_{s,c}$10	-2103.5	-296.6	-7177.8	-131.5
	$\sigma_{cls,Max}$10	-2103.5	-296.6	-7177.8	-11.0
	$\sigma_{cls,Med}$10	-2103.5	-296.6	-7177.8	-5.2
151	Ft. 10	-2103.5	-207.8	-8242.8	406.6
	$\sigma_{s,c}$10	-2103.5	-207.8	-8242.8	-146.6
	$\sigma_{cls,Max}$10	-2103.5	-207.8	-8242.8	-12.3

Nodo	Comb	N [kg]	M_{12} [kgm]	M_{13} [kgm]	σ [kg/cm²]
	$\sigma_{cls,Med}$10	-2103.5	-207.8	-8242.8	-5.9
151	Ft. 10	-2027.5	-223.1	-8258.7	409.0
	$\sigma_{s,c}$10	-2027.5	-223.1	-8258.7	-147.1
	$\sigma_{cls,Max}$10	-2027.5	-223.1	-8258.7	-12.4
	$\sigma_{cls,Med}$10	-2027.5	-223.1	-8258.7	-6.0
164	Ft. 10	-2027.5	-58.0	-8674.8	425.9
	$\sigma_{s,c}$10	-2027.5	-58.0	-8674.8	-149.2
	$\sigma_{cls,Max}$10	-2027.5	-58.0	-8674.8	-12.6
	$\sigma_{cls,Med}$10	-2027.5	-58.0	-8674.8	-6.2
164	Ft. 10	-1978.6	-71.1	-8680.2	427.3
	$\sigma_{s,c}$10	-1978.6	-71.1	-8680.2	-149.5
	$\sigma_{cls,Max}$10	-1978.6	-71.1	-8680.2	-12.7
	$\sigma_{cls,Med}$10	-1978.6	-71.1	-8680.2	-6.2
197	Ft. 8	-2181.3	16305.2	-411.6	890.5
	$\sigma_{s,c}$8	-2181.3	16305.2	-411.6	-303.0
	$\sigma_{cls,Max}$8	-2181.3	16305.2	-411.6	-25.8
	$\sigma_{cls,Med}$8	-2181.3	16305.2	-411.6	-12.4
197	Ft. 8	-3320.0	13089.8	-413.6	692.7
	$\sigma_{s,c}$8	-3320.0	13089.8	-413.6	-248.7
	$\sigma_{cls,Max}$8	-3320.0	13089.8	-413.6	-21.0
	$\sigma_{cls,Med}$8	-3320.0	13089.8	-413.6	-10.0
203	Ft. 8	-3320.0	16109.1	-394.1	861.2
	$\sigma_{s,c}$8	-3320.0	16109.1	-394.1	-301.4
	$\sigma_{cls,Max}$8	-3320.0	16109.1	-394.1	-25.5
	$\sigma_{cls,Med}$8	-3320.0	16109.1	-394.1	-12.3

Combinazioni Frequenti

13	Ft. 12	-27103.5	-5670.8	224.8	29.7
	$\sigma_{s,c}$12	-27103.5	-5670.8	224.8	-132.4
	$\sigma_{cls,Max}$12	-27103.5	-5670.8	224.8	-9.6
	$\sigma_{cls,Med}$12	-27103.5	-5670.8	224.8	-4.7
31	Ft. 14	-27626.0	280.3	1361.2	-35.7
	$\sigma_{s,c}$14	-27626.0	280.3	1361.2	-75.9
	$\sigma_{cls,Max}$14	-27626.0	280.3	1361.2	-5.2
	$\sigma_{cls,Med}$11	-28272.1	193.7	73.8	-3.8
31	Ft. 14	-25959.5	-506.1	1361.2	-29.6
	$\sigma_{s,c}$14	-25959.5	-506.1	1361.2	-75.3
	$\sigma_{cls,Max}$14	-25959.5	-506.1	1361.2	-5.2
	$\sigma_{cls,Med}$11	-26605.6	-592.7	73.8	-3.6
41	Ft. 12	-25217.7	2886.3	-599.6	-7.7
	$\sigma_{s,c}$12	-25217.7	2886.3	-599.6	-94.2
	$\sigma_{cls,Max}$12	-25217.7	2886.3	-599.6	-6.7
	$\sigma_{cls,Med}$11	-26550.5	-233.8	-516.1	-3.6

Nodo	Comb	N [kg]	M_{12} [kgm]	M_{13} [kgm]	σ [kg/cm²]
41	Ft. 12	-3522.2	-3389.4	-606.7	152.4
	$\sigma_{s,c}$12	-3522.2	-3389.4	-606.7	-80.9
	$\sigma_{cls,Max}$12	-3522.2	-3389.4	-606.7	-6.5
	$\sigma_{cls,Med}$12	-3522.2	-3389.4	-606.7	-2.7
87	Ft. 12	-3346.7	-1325.8	-589.8	42.2
	$\sigma_{s,c}$12	-3346.7	-1325.8	-589.8	-39.6
	$\sigma_{cls,Max}$12	-3346.7	-1325.8	-589.8	-3.0
	$\sigma_{cls,Med}$12	-3346.7	-1325.8	-589.8	-1.1
87	Ft. 12	-3300.3	-1358.6	-589.8	44.4
	$\sigma_{s,c}$12	-3300.3	-1358.6	-589.8	-40.4
	$\sigma_{cls,Max}$12	-3300.3	-1358.6	-589.8	-3.1
	$\sigma_{cls,Med}$12	-3300.3	-1358.6	-589.8	-1.1
108	Ft. 14	-3210.9	-355.0	-1510.2	44.2
	$\sigma_{s,c}$14	-3210.9	-355.0	-1510.2	-37.7
	$\sigma_{cls,Max}$14	-3210.9	-355.0	-1510.2	-2.9
	$\sigma_{cls,Med}$14	-3210.9	-355.0	-1510.2	-1.2
108	Ft. 14	-3133.6	-365.3	-1516.2	45.7
	$\sigma_{s,c}$14	-3133.6	-365.3	-1516.2	-38.0
	$\sigma_{cls,Max}$14	-3133.6	-365.3	-1516.2	-2.9
	$\sigma_{cls,Med}$14	-3133.6	-365.3	-1516.2	-1.2
130	Ft. 14	-3133.6	-344.3	-1850.7	61.9
	$\sigma_{s,c}$14	-3133.6	-344.3	-1850.7	-43.9
	$\sigma_{cls,Max}$14	-3133.6	-344.3	-1850.7	-3.4
	$\sigma_{cls,Med}$14	-3133.6	-344.3	-1850.7	-1.4
130	Ft. 14	-3056.2	-355.1	-1855.7	63.5
	$\sigma_{s,c}$14	-3056.2	-355.1	-1855.7	-44.2
	$\sigma_{cls,Max}$14	-3056.2	-355.1	-1855.7	-3.4
	$\sigma_{cls,Med}$14	-3056.2	-355.1	-1855.7	-1.4
151	Ft. 14	-3056.2	-306.3	-2069.8	73.1
	$\sigma_{s,c}$14	-3056.2	-306.3	-2069.8	-47.0
	$\sigma_{cls,Max}$14	-3056.2	-306.3	-2069.8	-3.7
	$\sigma_{cls,Med}$14	-3056.2	-306.3	-2069.8	-1.6
151	Ft. 14	-2978.8	-317.6	-2073.2	74.6
	$\sigma_{s,c}$14	-2978.8	-317.6	-2073.2	-47.3
	$\sigma_{cls,Max}$14	-2978.8	-317.6	-2073.2	-3.7
	$\sigma_{cls,Med}$14	-2978.8	-317.6	-2073.2	-1.6
164	Ft. 14	-2978.8	-189.6	-2157.0	75.5
	$\sigma_{s,c}$14	-2978.8	-189.6	-2157.0	-45.7
	$\sigma_{cls,Max}$14	-2978.8	-189.6	-2157.0	-3.6
	$\sigma_{cls,Med}$14	-2978.8	-189.6	-2157.0	-1.6
164	Ft. 14	-2928.5	-198.9	-2158.3	76.5
	$\sigma_{s,c}$14	-2928.5	-198.9	-2158.3	-45.9

Nodo	Comb	N [kg]	M_{12} [kgm]	M_{13} [kgm]	σ [kg/cm²]
	$\sigma_{cls,Max}$14	-2928.5	-198.9	-2158.3	-3.6
	$\sigma_{cls,Med}$14	-2928.5	-198.9	-2158.3	-1.6
197	Ft. 12	-2721.1	4466.0	-503.0	221.8
	$\sigma_{s,c}$12	-2721.1	4466.0	-503.0	-97.1
	$\sigma_{cls,Max}$12	-2721.1	4466.0	-503.0	-8.0
	$\sigma_{cls,Med}$12	-2721.1	4466.0	-503.0	-3.5
197	Ft. 12	-3472.8	3952.2	-488.5	181.2
	$\sigma_{s,c}$12	-3472.8	3952.2	-488.5	-88.3
	$\sigma_{cls,Max}$12	-3472.8	3952.2	-488.5	-7.1
	$\sigma_{cls,Med}$12	-3472.8	3952.2	-488.5	-3.1
203	Ft. 12	-3472.8	4796.4	-482.0	228.2
	$\sigma_{s,c}$12	-3472.8	4796.4	-482.0	-103.5
	$\sigma_{cls,Max}$12	-3472.8	4796.4	-482.0	-8.4
	$\sigma_{cls,Med}$12	-3472.8	4796.4	-482.0	-3.8
	Combinazioni Quasi Permanenti				
13	Ft. 15	-25781.7	-24763.9	299.7	1003.4
	$\sigma_{s,c}$15	-25781.7	-24763.9	299.7	-489.4
	$\sigma_{cls,Max}$15	-25781.7	-24763.9	299.7	-39.6
	$\sigma_{cls,Med}$15	-25781.7	-24763.9	299.7	-19.5
31	Ft. 15	-25617.6	5836.0	128.0	39.6
	$\sigma_{s,c}$15	-25617.6	5836.0	128.0	-132.1
	$\sigma_{cls,Max}$15	-25617.6	5836.0	128.0	-9.6
	$\sigma_{cls,Med}$15	-25617.6	5836.0	128.0	-4.7
31	Ft. 15	-23951.1	5049.8	128.0	26.2
	$\sigma_{s,c}$15	-23951.1	5049.8	128.0	-116.6
	$\sigma_{cls,Max}$15	-23951.1	5049.8	128.0	-8.4
	$\sigma_{cls,Med}$15	-23951.1	5049.8	128.0	-4.1
41	Ft. 15	-23896.0	15294.7	-846.1	523.2
	$\sigma_{s,c}$15	-23896.0	15294.7	-846.1	-327.0
	$\sigma_{cls,Max}$15	-23896.0	15294.7	-846.1	-25.8
	$\sigma_{cls,Med}$15	-23896.0	15294.7	-846.1	-12.1
41	Ft. 15	-2169.4	-15814.0	-937.2	878.2
	$\sigma_{s,c}$15	-2169.4	-15814.0	-937.2	-309.0
	$\sigma_{cls,Max}$15	-2169.4	-15814.0	-937.2	-26.1
	$\sigma_{cls,Med}$15	-2169.4	-15814.0	-937.2	-12.1
87	Ft. 15	-1993.9	-5223.5	-796.7	284.0
	$\sigma_{s,c}$15	-1993.9	-5223.5	-796.7	-117.3
	$\sigma_{cls,Max}$15	-1993.9	-5223.5	-796.7	-9.7
	$\sigma_{cls,Med}$15	-1993.9	-5223.5	-796.7	-4.1
87	Ft. 15	-1962.7	-5361.7	-796.9	292.3
	$\sigma_{s,c}$15	-1962.7	-5361.7	-796.9	-119.7
	$\sigma_{cls,Max}$15	-1962.7	-5361.7	-796.9	-9.9
	$\sigma_{cls,Med}$15	-1962.7	-5361.7	-796.9	-4.2

Nodo	Comb	N [kg]	M_{12} [kgm]	M_{13} [kgm]	σ [kg/cm²]
108	Ft. 15	-1962.7	-2428.4	-751.0	127.0
	$\sigma_{s,c}$15	-1962.7	-2428.4	-751.0	-65.2
	$\sigma_{cls,Max}$15	-1962.7	-2428.4	-751.0	-5.2
	$\sigma_{cls,Med}$15	-1962.7	-2428.4	-751.0	-2.0
108	Ft. 15	-1903.5	-2571.3	-751.3	135.9
	$\sigma_{s,c}$15	-1903.5	-2571.3	-751.3	-67.8
	$\sigma_{cls,Max}$15	-1903.5	-2571.3	-751.3	-5.5
	$\sigma_{cls,Med}$15	-1903.5	-2571.3	-751.3	-2.1
130	Ft. 15	-1903.5	-885.2	-703.2	42.8
	$\sigma_{s,c}$15	-1903.5	-885.2	-703.2	-33.3
	$\sigma_{cls,Max}$15	-1903.5	-885.2	-703.2	-2.6
	$\sigma_{cls,Med}$15	-1903.5	-885.2	-703.2	-0.9
130	Ft. 15	-1844.2	-1029.5	-703.6	50.9
	$\sigma_{s,c}$15	-1844.2	-1029.5	-703.6	-36.5
	$\sigma_{cls,Max}$15	-1844.2	-1029.5	-703.6	-2.8
	$\sigma_{cls,Med}$15	-1844.2	-1029.5	-703.6	-1.0
151	Ft. 15	-1844.2	118.6	-653.8	13.2
	$\sigma_{s,c}$15	-1844.2	118.6	-653.8	-15.7
	$\sigma_{cls,Max}$15	-1844.2	118.6	-653.8	-1.2
	$\sigma_{cls,Med}$15	-1844.2	118.6	-653.8	-0.5
151	Ft. 15	-1785.0	-26.8	-654.2	11.8
	$\sigma_{s,c}$15	-1785.0	-26.8	-654.2	-13.8
	$\sigma_{cls,Max}$15	-1785.0	-26.8	-654.2	-1.0
	$\sigma_{cls,Med}$15	-1785.0	-26.8	-654.2	-0.5
164	Ft. 15	-1785.0	1585.8	-603.1	78.5
	$\sigma_{s,c}$15	-1785.0	1585.8	-603.1	-45.5
	$\sigma_{cls,Max}$15	-1785.0	1585.8	-603.1	-3.6
	$\sigma_{cls,Med}$15	-1785.0	1585.8	-603.1	-1.3
164	Ft. 15	-1753.3	1441.8	-603.5	71.1
	$\sigma_{s,c}$15	-1753.3	1441.8	-603.5	-42.7
	$\sigma_{cls,Max}$15	-1753.3	1441.8	-603.5	-3.4
	$\sigma_{cls,Med}$15	-1753.3	1441.8	-603.5	-1.2
197	Ft. 15	-1443.3	16036.5	-304.7	884.0
	$\sigma_{s,c}$15	-1443.3	16036.5	-304.7	-293.8
	$\sigma_{cls,Max}$15	-1443.3	16036.5	-304.7	-25.1
	$\sigma_{cls,Med}$15	-1443.3	16036.5	-304.7	-12.2
197	Ft. 15	-2597.8	12846.2	-311.0	687.5
	$\sigma_{s,c}$15	-2597.8	12846.2	-311.0	-240.1
	$\sigma_{cls,Max}$15	-2597.8	12846.2	-311.0	-20.3
	$\sigma_{cls,Med}$15	-2597.8	12846.2	-311.0	-9.8
203	Ft. 15	-2597.8	15824.2	-290.8	853.6
	$\sigma_{s,c}$15	-2597.8	15824.2	-290.8	-292.0

Nodo	Comb	N [kg]	M_{12} [kgm]	M_{13} [kgm]	σ [kg/cm²]
	$\sigma_{cls,Max}$ 15	-2597.8	15824.2	-290.8	-24.8
	$\sigma_{cls,Med}$ 15	-2597.8	15824.2	-290.8	-12.1

Pilastro: 14/59 / L 11.57[m] / Sezione 4 B 80 [cm]H 80 [cm]

Af: 24 ø 22 Af=91.23 [cm²] **< 1 22 x 4 V + 5 22 x 2 B + 5 22 x 2 H >**

Staffe: ø 10 4br./12.5' x 1157.4

Verifiche a Presso-Flessione S.L.U.

Nodo	Comb	N	M_{12}	M_{13}	α_{12}	α_{13}	Sd/Sr
14	2	-97403.6	-39136.0	809.0	1.00	1.00	0.22
32	1	-92432.1	5143.8	-350.6	1.00	1.00	0.09
32	1	-89256.4	3617.1	-350.6	1.00	1.00	0.08
45	2	-70957.9	20519.0	-1198.2	1.00	1.00	0.13
45	2	-38045.2	-52206.5	-1045.7	1.00	1.00	0.36
59	2	-29985.2	71827.3	909.8	1.00	1.00	0.53

Verifiche a Taglio

Da [m]	A [m]	V_{d12} [kg]	V_{Rd12} [kg]	V_{d13} [kg]	V_{Rd13} [kg]	Staffe
0.15	11.72	40010.9	66913.5	16570.3	66913.5	ø 10 4br./12.5'

Verifiche a Presso-Flessione S.L.E.

Nodo	Comb	N [kg]	M_{12} [kgm]	M_{13} [kgm]	σ [kg/cm²]
		Combinazioni Rare			
14	Ft. 8	-74538.4	-26351.6	551.5	375.2
	$\sigma_{s,c}$ 8	-74538.4	-26351.6	551.5	-511.6
	$\sigma_{cls,Max}$ 8	-74538.4	-26351.6	551.5	-38.2
	$\sigma_{cls,Med}$ 8	-74538.4	-26351.6	551.5	-18.8
32	Ft. 8	-61138.4	4690.7	-326.7	-60.0
	$\sigma_{s,c}$ 7	-69437.4	3667.6	-248.2	-179.4
	$\sigma_{cls,Max}$ 7	-69437.4	3667.6	-248.2	-12.4
	$\sigma_{cls,Med}$ 10	-71730.3	1817.7	1294.9	-9.2
32	Ft. 8	-58695.5	3516.3	-326.7	-68.9
	$\sigma_{s,c}$ 7	-66994.5	2493.3	-248.2	-161.1
	$\sigma_{cls,Max}$ 7	-66994.5	2493.3	-248.2	-11.0
	$\sigma_{cls,Med}$ 10	-69287.4	643.2	1294.9	-8.9
45	Ft. 8	-54195.5	13928.2	-831.0	115.2

Nodo	Comb	N [kg]	M_{12} [kgm]	M_{13} [kgm]	σ [kg/cm²]
	$\sigma_{s,c}$8	-54195.5	13928.2	-831.0	-292.7
	$\sigma_{cls,Max}$8	-54195.5	13928.2	-831.0	-21.4
	$\sigma_{cls,Med}$8	-54195.5	13928.2	-831.0	-10.2
45	Ft. 8	-29078.0	-36273.3	-722.9	1200.3
	$\sigma_{s,c}$8	-29078.0	-36273.3	-722.9	-619.7
	$\sigma_{cls,Max}$8	-29078.0	-36273.3	-722.9	-49.8
	$\sigma_{cls,Med}$8	-29078.0	-36273.3	-722.9	-24.3
59	Ft. 8	-22878.0	49906.5	702.0	1832.2
	$\sigma_{s,c}$8	-22878.0	49906.5	702.0	-817.0
	$\sigma_{cls,Max}$8	-22878.0	49906.5	702.0	-66.8
	$\sigma_{cls,Med}$8	-22878.0	49906.5	702.0	-32.8
Combinazioni Frequenti					
14	Ft. 12	-81245.3	-7062.0	391.6	-70.7
	$\sigma_{s,c}$12	-81245.3	-7062.0	391.6	-243.1
	$\sigma_{cls,Max}$12	-81245.3	-7062.0	391.6	-17.0
	$\sigma_{cls,Med}$11	-84623.7	-2310.7	349.0	-10.9
32	Ft. 12	-67845.3	2199.0	-205.8	-103.2
	$\sigma_{s,c}$12	-67845.3	2199.0	-205.8	-158.8
	$\sigma_{cls,Max}$12	-67845.3	2199.0	-205.8	-10.8
	$\sigma_{cls,Med}$11	-71223.7	1669.2	-166.9	-9.2
32	Ft. 12	-65402.4	1024.6	-205.8	-112.1
	$\sigma_{s,c}$12	-65402.4	1024.6	-205.8	-140.5
	$\sigma_{cls,Max}$12	-65402.4	1024.6	-205.8	-9.5
	$\sigma_{cls,Med}$11	-68780.8	494.7	-166.9	-8.9
45	Ft. 12	-60902.4	4125.8	-698.3	-61.8
	$\sigma_{s,c}$12	-60902.4	4125.8	-698.3	-173.4
	$\sigma_{cls,Max}$12	-60902.4	4125.8	-698.3	-12.1
	$\sigma_{cls,Med}$11	-64280.8	1823.2	-634.5	-8.3
45	Ft. 12	-32295.1	-17466.7	-635.4	398.2
	$\sigma_{s,c}$12	-32295.1	-17466.7	-635.4	-328.0
	$\sigma_{cls,Max}$12	-32295.1	-17466.7	-635.4	-25.2
	$\sigma_{cls,Med}$12	-32295.1	-17466.7	-635.4	-12.2
59	Ft. 12	-26095.1	23877.7	851.3	724.4
	$\sigma_{s,c}$12	-26095.1	23877.7	851.3	-426.4
	$\sigma_{cls,Max}$12	-26095.1	23877.7	851.3	-33.8
	$\sigma_{cls,Med}$12	-26095.1	23877.7	851.3	-16.2
Combinazioni Quasi Permanenti					
14	Ft. 15	-78260.7	-26527.5	512.9	353.6
	$\sigma_{s,c}$15	-78260.7	-26527.5	512.9	-517.2
	$\sigma_{cls,Max}$15	-78260.7	-26527.5	512.9	-38.5
	$\sigma_{cls,Med}$15	-78260.7	-26527.5	512.9	-18.9
32	Ft. 15	-64860.7	4989.2	-293.1	-64.2
	$\sigma_{s,c}$15	-64860.7	4989.2	-293.1	-186.3
	$\sigma_{cls,Max}$15	-64860.7	4989.2	-293.1	-13.0

Nodo	Comb	N [kg]	M_{12} [kgm]	M_{13} [kgm]	σ [kg/cm²]
	$\sigma_{cls,Med}$ 15	-64860.7	4989.2	-293.1	-8.3
32	Ft. 15	-62417.8	3814.9	-293.1	-73.0
	$\sigma_{s,c}$ 15	-62417.8	3814.9	-293.1	-168.0
	$\sigma_{cls,Max}$ 15	-62417.8	3814.9	-293.1	-11.6
	$\sigma_{cls,Med}$ 15	-62417.8	3814.9	-293.1	-8.0
45	Ft. 15	-57917.8	14386.2	-691.2	106.8
	$\sigma_{s,c}$ 15	-57917.8	14386.2	-691.2	-301.8
	$\sigma_{cls,Max}$ 15	-57917.8	14386.2	-691.2	-22.0
	$\sigma_{cls,Med}$ 15	-57917.8	14386.2	-691.2	-10.6
45	Ft. 15	-30833.5	-37486.9	-578.5	1228.2
	$\sigma_{s,c}$ 15	-30833.5	-37486.9	-578.5	-637.9
	$\sigma_{cls,Max}$ 15	-30833.5	-37486.9	-578.5	-51.2
	$\sigma_{cls,Med}$ 15	-30833.5	-37486.9	-578.5	-25.1
59	Ft. 15	-24633.5	51694.6	712.6	1887.1
	$\sigma_{s,c}$ 15	-24633.5	51694.6	712.6	-847.6
	$\sigma_{cls,Max}$ 15	-24633.5	51694.6	712.6	-69.2
	$\sigma_{cls,Med}$ 15	-24633.5	51694.6	712.6	-34.0

Pilastro: 15/63 / L 11.20[m] / Sezione 4 B 80 [cm]H 80 [cm]

Af: 18 ø 22 Af=68.42 [cm²] **< 1□22 x 4 V + 3□22 x 2 B + 4□22 x 2 H >**

Staffe: ø 10 4br./12.5' x 1120.0

Verifiche a Presso-Flessione S.L.U.

Nodo	Comb	N	M_{12}	M_{13}	α_{12}	α_{13}	Sd/Sr
15	2	-70081.0	-43354.3	943.9	1.00	1.00	0.31
33	1	-58952.9	3292.7	-646.6	1.00	1.00	0.06
33	6	-40478.5	16664.9	-1814.4	7.44	1.45	0.11
63	2	-37498.0	40896.3	1474.8	1.00	1.00	0.34

Verifiche a Taglio

Da [m]	A [m]	V_{d12} [kg]	V_{Rd12} [kg]	V_{d13} [kg]	V_{Rd13} [kg]	Staffe
0.15	11.35	28333.6	66913.5	17416.4	66913.5	ø 10 4br./12.5'

Verifiche a Presso-Flessione S.L.E.

Nodo	Comb	N [kg]	M_{12} [kgm]	M_{13} [kgm]	σ [kg/cm²]
		Combinazioni Rare			

Nodo	Comb	N [kg]	M_{12} [kgm]	M_{13} [kgm]	σ [kg/cm²]
15	Ft. 8	-53584.7	-29284.6	631.7	873.9
	$\sigma_{s,c}$8	-53584.7	-29284.6	631.7	-610.2
	$\sigma_{cls,Max}$8	-53584.7	-29284.6	631.7	-47.6
	$\sigma_{cls,Med}$8	-53584.7	-29284.6	631.7	-23.3
33	Ft. 8	-40184.7	2667.4	-585.2	-40.8
	$\sigma_{s,c}$7	-44379.4	2382.0	-451.8	-124.8
	$\sigma_{cls,Max}$7	-44379.4	2382.0	-451.8	-8.6
	$\sigma_{cls,Med}$7	-44379.4	2382.0	-451.8	-6.0
33	Ft. 8	-39220.9	2231.9	-585.2	-44.3
	$\sigma_{s,c}$7	-43415.5	1946.6	-451.8	-117.4
	$\sigma_{cls,Max}$7	-43415.5	1946.6	-451.8	-8.1
	$\sigma_{cls,Med}$7	-43415.5	1946.6	-451.8	-5.8
63	Ft. 8	-28520.9	27849.1	1099.0	1154.7
	$\sigma_{s,c}$8	-28520.9	27849.1	1099.0	-568.8
	$\sigma_{cls,Max}$8	-28520.9	27849.1	1099.0	-45.9
	$\sigma_{cls,Med}$8	-28520.9	27849.1	1099.0	-21.9
Combinazioni Frequenti					
15	Ft. 12	-56338.9	-8644.0	327.9	-1.5
	$\sigma_{s,c}$12	-56338.9	-8644.0	327.9	-225.8
	$\sigma_{cls,Max}$12	-56338.9	-8644.0	327.9	-16.1
	$\sigma_{cls,Med}$12	-56338.9	-8644.0	327.9	-7.9
33	Ft. 12	-42938.9	1729.6	-378.4	-60.6
	$\sigma_{s,c}$11	-44612.3	1565.5	-310.9	-113.4
	$\sigma_{cls,Max}$11	-44612.3	1565.5	-310.9	-7.8
	$\sigma_{cls,Med}$11	-44612.3	1565.5	-310.9	-6.0
33	Ft. 12	-41975.0	1294.4	-378.4	-64.1
	$\sigma_{s,c}$11	-43648.5	1130.4	-310.9	-106.0
	$\sigma_{cls,Max}$11	-43648.5	1130.4	-310.9	-7.2
	$\sigma_{cls,Med}$11	-43648.5	1130.4	-310.9	-5.9
63	Ft. 12	-31275.0	9614.1	1213.0	157.3
	$\sigma_{s,c}$12	-31275.0	9614.1	1213.0	-226.9
	$\sigma_{cls,Max}$12	-31275.0	9614.1	1213.0	-16.9
	$\sigma_{cls,Med}$12	-31275.0	9614.1	1213.0	-7.7
Combinazioni Quasi Permanenti					
15	Ft. 15	-55829.0	-29495.1	591.3	855.1
	$\sigma_{s,c}$15	-55829.0	-29495.1	591.3	-615.1
	$\sigma_{cls,Max}$15	-55829.0	-29495.1	591.3	-47.8
	$\sigma_{cls,Med}$15	-55829.0	-29495.1	591.3	-23.4
33	Ft. 15	-42429.0	2863.3	-518.5	-43.7
	$\sigma_{s,c}$15	-42429.0	2863.3	-518.5	-127.7
	$\sigma_{cls,Max}$15	-42429.0	2863.3	-518.5	-8.9
	$\sigma_{cls,Med}$15	-42429.0	2863.3	-518.5	-5.7
33	Ft. 15	-41465.2	2427.8	-518.5	-47.2
	$\sigma_{s,c}$15	-41465.2	2427.8	-518.5	-120.3

Nodo	Comb	N [kg]	M_{12} [kgm]	M_{13} [kgm]	σ [kg/cm²]
	$\sigma_{cls,Max}$ 15	-41465.2	2427.8	-518.5	-8.4
	$\sigma_{cls,Med}$ 15	-41465.2	2427.8	-518.5	-5.6
63	Ft. 15	-30765.2	28370.7	1077.5	1150.3
	$\sigma_{s,c}$ 15	-30765.2	28370.7	1077.5	-580.6
	$\sigma_{cls,Max}$ 15	-30765.2	28370.7	1077.5	-46.8
	$\sigma_{cls,Med}$ 15	-30765.2	28370.7	1077.5	-22.4

Pilastro: 18/205 / L 21.93[m] / Sezione 1 B 80 [cm]H 100 [cm]

Af: 4 ø 22 + 26 ø 18 Af=81.37 [cm²] **< 1□22 x 4 V + 6□18 x 2 B + 7□18 x 2 H >**

Staffe: ø 8 4br.x6br./7.5' x 2192.6

Verifiche a Presso-Flessione S.L.U.

Nodo	Comb	N	M_{12}	M_{13}	α_{12}	α_{13}	Sd/Sr
18	2	-46750.4	-58527.9	2676.3	1.00	1.00	0.31
47	2	-46465.3	19094.5	-348.6	1.00	1.00	0.08
47	2	-22135.4	-10261.5	188.0	1.00	1.00	0.04
74	4	-18878.2	-466.0	-6834.8	1.00	1.00	0.04
74	4	-18840.9	-482.7	-6849.6	1.00	1.00	0.04
95	4	-18840.9	-444.0	-6969.5	1.00	1.00	0.04
95	4	-18788.1	-467.0	-6983.6	1.00	1.00	0.04
117	4	-18788.1	-154.6	-6732.9	1.00	1.00	0.03
117	4	-18735.3	-177.6	-6746.2	1.00	1.00	0.03
138	4	-18735.3	355.4	-6078.2	1.00	1.00	0.03
138	4	-18682.7	332.6	-6090.1	1.00	1.00	0.03
166	2	-21554.1	7464.2	-1902.5	1.00	1.00	0.04
166	2	-21355.2	7363.7	-1901.1	1.00	1.00	0.04
180	2	-21355.2	9256.6	-2588.6	1.00	1.00	0.04
180	2	-13710.9	4395.5	-2588.6	1.00	1.00	0.03
199	4	-10910.3	7.5	-22015.1	1.00	1.00	0.17
199	4	-11084.9	205.6	-21290.2	1.00	1.00	0.16
205	4	-11084.9	-11.4	-23810.9	1.00	1.00	0.18

Verifiche a Taglio

Da [m]	A [m]	V_{d12} [kg]	V_{Rd12} [kg]	V_{d13} [kg]	V_{Rd13} [kg]	Staffe
0.15	22.08	12416.9	90256.6	15485.4	107061.7	ø 8 4br.x6br./7.5'

Verifiche a Presso-Flessione S.L.E.

Nodo	Comb	N [kg]	M_{12} [kgm]	M_{13} [kgm]	σ [kg/cm²]
		Combinazioni Rare			
18	Ft. 8	-32710.3	-39090.8	1806.7	1040.7
	$\sigma_{s,c}$ 8	-32710.3	-39090.8	1806.7	-532.0
	$\sigma_{cls,Max}$ 8	-32710.3	-39090.8	1806.7	-41.2
	$\sigma_{cls,Med}$ 8	-32710.3	-39090.8	1806.7	-19.2
47	Ft. 8	-32491.0	12698.9	-235.7	118.9
	$\sigma_{s,c}$ 8	-32491.0	12698.9	-235.7	-178.1
	$\sigma_{cls,Max}$ 8	-32491.0	12698.9	-235.7	-13.0
	$\sigma_{cls,Med}$ 8	-32491.0	12698.9	-235.7	-6.3
47	Ft. 8	-15288.3	-6861.5	137.3	81.3
	$\sigma_{s,c}$ 8	-15288.3	-6861.5	137.3	-95.5
	$\sigma_{cls,Max}$ 8	-15288.3	-6861.5	137.3	-7.0
	$\sigma_{cls,Med}$ 8	-15288.3	-6861.5	137.3	-3.4
74	Ft. 10	-13106.2	-350.4	-4574.4	65.3
	$\sigma_{s,c}$ 10	-13106.2	-350.4	-4574.4	-80.3
	$\sigma_{cls,Max}$ 10	-13106.2	-350.4	-4574.4	-6.0
	$\sigma_{cls,Med}$ 10	-13106.2	-350.4	-4574.4	-2.9
74	Ft. 10	-13077.5	-363.4	-4584.3	66.1
	$\sigma_{s,c}$ 10	-13077.5	-363.4	-4584.3	-80.6
	$\sigma_{cls,Max}$ 10	-13077.5	-363.4	-4584.3	-6.0
	$\sigma_{cls,Med}$ 10	-13077.5	-363.4	-4584.3	-2.9
95	Ft. 10	-13077.5	-328.5	-4673.3	68.8
	$\sigma_{s,c}$ 10	-13077.5	-328.5	-4673.3	-81.5
	$\sigma_{cls,Max}$ 10	-13077.5	-328.5	-4673.3	-6.1
	$\sigma_{cls,Med}$ 10	-13077.5	-328.5	-4673.3	-2.9
95	Ft. 10	-13036.9	-346.2	-4682.7	69.7
	$\sigma_{s,c}$ 10	-13036.9	-346.2	-4682.7	-81.9
	$\sigma_{cls,Max}$ 10	-13036.9	-346.2	-4682.7	-6.2
	$\sigma_{cls,Med}$ 10	-13036.9	-346.2	-4682.7	-2.9
117	Ft. 10	-13036.9	-122.3	-4524.7	61.1
	$\sigma_{s,c}$ 10	-13036.9	-122.3	-4524.7	-76.6
	$\sigma_{cls,Max}$ 10	-13036.9	-122.3	-4524.7	-5.7
	$\sigma_{cls,Med}$ 10	-13036.9	-122.3	-4524.7	-2.8
117	Ft. 10	-12996.2	-140.0	-4533.5	62.0
	$\sigma_{s,c}$ 10	-12996.2	-140.0	-4533.5	-77.0
	$\sigma_{cls,Max}$ 10	-12996.2	-140.0	-4533.5	-5.8
	$\sigma_{cls,Med}$ 10	-12996.2	-140.0	-4533.5	-2.8

Nodo	Comb	N [kg]	M_{12} [kgm]	M_{13} [kgm]	σ [kg/cm²]
138	Ft. 10	-12996.2	237.4	-4097.2	48.3
	$\sigma_{s,c}$10	-12996.2	237.4	-4097.2	-71.5
	$\sigma_{cls,Max}$10	-12996.2	237.4	-4097.2	-5.3
	$\sigma_{cls,Med}$10	-12996.2	237.4	-4097.2	-2.6
138	Ft. 10	-12955.6	219.8	-4105.1	48.6
	$\sigma_{s,c}$10	-12955.6	219.8	-4105.1	-71.4
	$\sigma_{cls,Max}$10	-12955.6	219.8	-4105.1	-5.3
	$\sigma_{cls,Med}$10	-12955.6	219.8	-4105.1	-2.6
166	Ft. 8	-14869.9	5001.6	-1322.4	53.8
	$\sigma_{s,c}$8	-14869.9	5001.6	-1322.4	-88.5
	$\sigma_{cls,Max}$8	-14869.9	5001.6	-1322.4	-6.4
	$\sigma_{cls,Med}$8	-14869.9	5001.6	-1322.4	-2.6
166	Ft. 8	-14724.1	4932.8	-1321.4	53.0
	$\sigma_{s,c}$8	-14724.1	4932.8	-1321.4	-87.5
	$\sigma_{cls,Max}$8	-14724.1	4932.8	-1321.4	-6.4
	$\sigma_{cls,Med}$8	-14724.1	4932.8	-1321.4	-2.6
180	Ft. 8	-14724.1	6254.6	-1801.3	98.6
	$\sigma_{s,c}$8	-14724.1	6254.6	-1801.3	-113.4
	$\sigma_{cls,Max}$8	-14724.1	6254.6	-1801.3	-8.4
	$\sigma_{cls,Med}$8	-14724.1	6254.6	-1801.3	-3.3
180	Ft. 8	-9382.3	2864.8	-1801.3	47.9
	$\sigma_{s,c}$8	-9382.3	2864.8	-1801.3	-66.7
	$\sigma_{cls,Max}$8	-9382.3	2864.8	-1801.3	-4.9
	$\sigma_{cls,Med}$8	-9382.3	2864.8	-1801.3	-1.7
199	Ft. 10	-7515.2	23.7	-15097.8	573.4
	$\sigma_{s,c}$9	-11063.8	2706.0	-13579.3	-247.8
	$\sigma_{cls,Max}$9	-11063.8	2706.0	-13579.3	-19.9
	$\sigma_{cls,Med}$10	-7515.2	23.7	-15097.8	-9.1
199	Ft. 10	-7623.9	146.7	-14617.6	552.6
	$\sigma_{s,c}$9	-10455.4	1425.9	-13659.4	-226.4
	$\sigma_{cls,Max}$9	-10455.4	1425.9	-13659.4	-18.4
	$\sigma_{cls,Med}$10	-7623.9	146.7	-14617.6	-8.8
205	Ft. 10	-7623.9	-21.7	-16351.5	627.3
	$\sigma_{s,c}$9	-10455.4	-1195.1	-15533.6	-248.3
	$\sigma_{cls,Max}$9	-10455.4	-1195.1	-15533.6	-20.3
	$\sigma_{cls,Med}$10	-7623.9	-21.7	-16351.5	-9.8
	Combinazioni Frequenti				
18	Ft. 12	-24839.7	-8433.1	622.6	65.4
	$\sigma_{s,c}$12	-24839.7	-8433.1	622.6	-126.3
	$\sigma_{cls,Max}$12	-24839.7	-8433.1	622.6	-9.1
	$\sigma_{cls,Med}$12	-24839.7	-8433.1	622.6	-4.3
47	Ft. 13	-18109.3	-718.0	93.8	-22.7
	$\sigma_{s,c}$12	-24620.4	1645.7	82.2	-54.2

Nodo	Comb	N [kg]	M_{12} [kgm]	M_{13} [kgm]	σ [kg/cm²]
	$\sigma_{cls,Max}$ 12	-24620.4	1645.7	82.2	-3.7
	$\sigma_{cls,Med}$ 12	-24620.4	1645.7	82.2	-2.7
47	Ft. 13	-9758.3	186.5	235.5	-12.0
	$\sigma_{s,c}$ 12	-14865.8	-1111.1	297.9	-36.1
	$\sigma_{cls,Max}$ 12	-14865.8	-1111.1	297.9	-2.5
	$\sigma_{cls,Med}$ 11	-15026.7	369.8	349.1	-1.6
74	Ft. 14	-14365.6	-312.9	-955.8	-11.4
	$\sigma_{s,c}$ 12	-14786.1	-1280.2	-145.4	-35.9
	$\sigma_{cls,Max}$ 12	-14786.1	-1280.2	-145.4	-2.5
	$\sigma_{cls,Med}$ 11	-14947.1	-281.4	-44.5	-1.6
74	Ft. 14	-14339.0	-323.4	-957.4	-11.3
	$\sigma_{s,c}$ 12	-14749.9	-1302.1	-144.9	-36.0
	$\sigma_{cls,Max}$ 12	-14749.9	-1302.1	-144.9	-2.5
	$\sigma_{cls,Med}$ 11	-14921.1	-291.1	-44.1	-1.6
95	Ft. 14	-14339.0	-323.6	-1069.6	-10.2
	$\sigma_{s,c}$ 14	-14339.0	-323.6	-1069.6	-36.5
	$\sigma_{cls,Max}$ 14	-14339.0	-323.6	-1069.6	-2.5
	$\sigma_{cls,Med}$ 11	-14921.1	-301.6	-163.3	-1.6
95	Ft. 14	-14300.3	-339.0	-1071.1	-10.0
	$\sigma_{s,c}$ 14	-14300.3	-339.0	-1071.1	-36.6
	$\sigma_{cls,Max}$ 14	-14300.3	-339.0	-1071.1	-2.6
	$\sigma_{cls,Med}$ 11	-14883.0	-316.2	-162.9	-1.6
117	Ft. 14	-14300.3	-184.1	-1132.4	-10.6
	$\sigma_{s,c}$ 14	-14300.3	-184.1	-1132.4	-35.9
	$\sigma_{cls,Max}$ 14	-14300.3	-184.1	-1132.4	-2.5
	$\sigma_{cls,Med}$ 11	-14883.0	-172.8	-280.5	-1.6
117	Ft. 14	-14261.5	-199.5	-1133.8	-10.4
	$\sigma_{s,c}$ 14	-14261.5	-199.5	-1133.8	-36.0
	$\sigma_{cls,Max}$ 14	-14261.5	-199.5	-1133.8	-2.5
	$\sigma_{cls,Med}$ 11	-14844.8	-187.4	-280.1	-1.6
138	Ft. 13	-9572.9	143.7	-359.9	-10.9
	$\sigma_{s,c}$ 14	-14261.5	94.3	-1138.2	-35.2
	$\sigma_{cls,Max}$ 14	-14261.5	94.3	-1138.2	-2.5
	$\sigma_{cls,Med}$ 11	-14844.8	101.8	-396.0	-1.6
138	Ft. 13	-9533.5	127.6	-359.7	-10.9
	$\sigma_{s,c}$ 14	-14222.8	78.9	-1139.4	-35.0
	$\sigma_{cls,Max}$ 14	-14222.8	78.9	-1139.4	-2.4
	$\sigma_{cls,Med}$ 11	-14806.7	87.2	-395.6	-1.6
166	Ft. 12	-14605.7	1337.5	-673.0	-6.3
	$\sigma_{s,c}$ 12	-14605.7	1337.5	-673.0	-41.2
	$\sigma_{cls,Max}$ 12	-14605.7	1337.5	-673.0	-2.9
	$\sigma_{cls,Med}$ 11	-14806.7	495.9	-509.8	-1.6

Nodo	Comb	N [kg]	M_{12} [kgm]	M_{13} [kgm]	σ [kg/cm²]
166	Ft. 12	-14499.5	1316.0	-672.5	-6.3
	$\sigma_{s,c}$12	-14499.5	1316.0	-672.5	-40.9
	$\sigma_{cls,Max}$12	-14499.5	1316.0	-672.5	-2.9
	$\sigma_{cls,Med}$11	-14710.7	486.5	-509.4	-1.6
180	Ft. 12	-14499.5	2376.2	-980.9	6.0
	$\sigma_{s,c}$12	-14499.5	2376.2	-980.9	-52.9
	$\sigma_{cls,Max}$12	-14499.5	2376.2	-980.9	-3.8
	$\sigma_{cls,Med}$12	-14499.5	2376.2	-980.9	-1.6
180	Ft. 13	-4594.4	-1559.9	-672.7	22.3
	$\sigma_{s,c}$11	-9368.9	-1790.9	-778.8	-38.3
	$\sigma_{cls,Max}$11	-9368.9	-1790.9	-778.8	-2.7
	$\sigma_{cls,Med}$11	-9368.9	-1790.9	-778.8	-1.1
199	Ft. 14	-9284.3	-135.6	-13970.0	503.6
	$\sigma_{s,c}$14	-9284.3	-135.6	-13970.0	-207.9
	$\sigma_{cls,Max}$14	-9284.3	-135.6	-13970.0	-17.1
	$\sigma_{cls,Med}$14	-9284.3	-135.6	-13970.0	-8.4
199	Ft. 14	-9457.1	104.7	-13944.5	500.0
	$\sigma_{s,c}$14	-9457.1	104.7	-13944.5	-207.4
	$\sigma_{cls,Max}$14	-9457.1	104.7	-13944.5	-17.0
	$\sigma_{cls,Med}$14	-9457.1	104.7	-13944.5	-8.4
205	Ft. 14	-9457.1	-76.3	-15900.0	585.7
	$\sigma_{s,c}$14	-9457.1	-76.3	-15900.0	-234.0
	$\sigma_{cls,Max}$14	-9457.1	-76.3	-15900.0	-19.3
	$\sigma_{cls,Med}$14	-9457.1	-76.3	-15900.0	-9.6
Combinazioni Quasi Permanenti					
18	Ft. 15	-32985.2	-39017.2	1784.2	1034.3
	$\sigma_{s,c}$15	-32985.2	-39017.2	1784.2	-530.9
	$\sigma_{cls,Max}$15	-32985.2	-39017.2	1784.2	-41.1
	$\sigma_{cls,Med}$15	-32985.2	-39017.2	1784.2	-19.2
47	Ft. 15	-32765.9	12725.1	-223.3	117.5
	$\sigma_{s,c}$15	-32765.9	12725.1	-223.3	-178.4
	$\sigma_{cls,Max}$15	-32765.9	12725.1	-223.3	-13.0
	$\sigma_{cls,Med}$15	-32765.9	12725.1	-223.3	-6.4
47	Ft. 15	-14804.7	-6790.6	140.4	83.2
	$\sigma_{s,c}$15	-14804.7	-6790.6	140.4	-94.4
	$\sigma_{cls,Max}$15	-14804.7	-6790.6	140.4	-6.9
	$\sigma_{cls,Med}$15	-14804.7	-6790.6	140.4	-3.4
74	Ft. 15	-14725.1	-5120.9	-512.8	43.9
	$\sigma_{s,c}$15	-14725.1	-5120.9	-512.8	-78.4
	$\sigma_{cls,Max}$15	-14725.1	-5120.9	-512.8	-5.7
	$\sigma_{cls,Med}$15	-14725.1	-5120.9	-512.8	-2.6
74	Ft. 15	-14648.5	-5190.7	-511.8	46.0

Nodo	Comb	N [kg]	M_{12} [kgm]	M_{13} [kgm]	σ [kg/cm²]
	$\sigma_{s,c}$15	-14648.5	-5190.7	-511.8	-79.3
	$\sigma_{cls,Max}$15	-14648.5	-5190.7	-511.8	-5.8
	$\sigma_{cls,Med}$15	-14648.5	-5190.7	-511.8	-2.6
95	Ft. 15	-14648.5	-2836.8	-711.9	7.2
	$\sigma_{s,c}$15	-14648.5	-2836.8	-711.9	-54.4
	$\sigma_{cls,Max}$15	-14648.5	-2836.8	-711.9	-3.9
	$\sigma_{cls,Med}$15	-14648.5	-2836.8	-711.9	-1.7
95	Ft. 15	-14561.0	-2911.2	-710.9	8.2
	$\sigma_{s,c}$15	-14561.0	-2911.2	-710.9	-55.0
	$\sigma_{cls,Max}$15	-14561.0	-2911.2	-710.9	-3.9
	$\sigma_{cls,Med}$15	-14561.0	-2911.2	-710.9	-1.7
117	Ft. 15	-14561.0	24.5	-910.5	-14.5
	$\sigma_{s,c}$15	-14561.0	24.5	-910.5	-32.9
	$\sigma_{cls,Max}$15	-14561.0	24.5	-910.5	-2.3
	$\sigma_{cls,Med}$15	-14561.0	24.5	-910.5	-1.6
117	Ft. 15	-14473.8	-49.8	-909.5	-14.2
	$\sigma_{s,c}$15	-14473.8	-49.8	-909.5	-32.9
	$\sigma_{cls,Max}$15	-14473.8	-49.8	-909.5	-2.3
	$\sigma_{cls,Med}$15	-14473.8	-49.8	-909.5	-1.6
138	Ft. 15	-14473.8	2900.4	-1108.9	13.5
	$\sigma_{s,c}$15	-14473.8	2900.4	-1108.9	-59.5
	$\sigma_{cls,Max}$15	-14473.8	2900.4	-1108.9	-4.3
	$\sigma_{cls,Med}$15	-14473.8	2900.4	-1108.9	-1.8
138	Ft. 15	-14386.7	2826.5	-1107.9	12.8
	$\sigma_{s,c}$15	-14386.7	2826.5	-1107.9	-58.6
	$\sigma_{cls,Max}$15	-14386.7	2826.5	-1107.9	-4.2
	$\sigma_{cls,Med}$15	-14386.7	2826.5	-1107.9	-1.7
166	Ft. 15	-14386.7	5193.5	-1307.3	61.5
	$\sigma_{s,c}$15	-14386.7	5193.5	-1307.3	-90.9
	$\sigma_{cls,Max}$15	-14386.7	5193.5	-1307.3	-6.6
	$\sigma_{cls,Med}$15	-14386.7	5193.5	-1307.3	-2.7
166	Ft. 15	-14241.1	5124.9	-1306.4	60.7
	$\sigma_{s,c}$15	-14241.1	5124.9	-1306.4	-89.9
	$\sigma_{cls,Max}$15	-14241.1	5124.9	-1306.4	-6.6
	$\sigma_{cls,Med}$15	-14241.1	5124.9	-1306.4	-2.6
180	Ft. 15	-14241.1	6736.9	-1785.4	117.3
	$\sigma_{s,c}$15	-14241.1	6736.9	-1785.4	-120.1
	$\sigma_{cls,Max}$15	-14241.1	6736.9	-1785.4	-8.9
	$\sigma_{cls,Med}$15	-14241.1	6736.9	-1785.4	-3.5
180	Ft. 15	-7399.4	2372.1	-1785.4	50.2
	$\sigma_{s,c}$15	-7399.4	2372.1	-1785.4	-60.4
	$\sigma_{cls,Max}$15	-7399.4	2372.1	-1785.4	-4.5

Nodo	Comb	N [kg]	M_{12} [kgm]	M_{13} [kgm]	σ [kg/cm²]
	$\sigma_{cls,Med}$15	-7399.4	2372.1	-1785.4	-1.5
199	Ft. 15	-7399.4	4599.5	-7691.0	338.8
	$\sigma_{s,c}$15	-7399.4	4599.5	-7691.0	-191.0
	$\sigma_{cls,Max}$15	-7399.4	4599.5	-7691.0	-15.0
	$\sigma_{cls,Med}$15	-7399.4	4599.5	-7691.0	-5.2
199	Ft. 15	-6193.5	2196.5	-7729.7	304.8
	$\sigma_{s,c}$15	-6193.5	2196.5	-7729.7	-152.0
	$\sigma_{cls,Max}$15	-6193.5	2196.5	-7729.7	-12.2
	$\sigma_{cls,Med}$15	-6193.5	2196.5	-7729.7	-4.8
205	Ft. 15	-6193.5	-1948.9	-8617.1	338.9
	$\sigma_{s,c}$15	-6193.5	-1948.9	-8617.1	-160.4
	$\sigma_{cls,Max}$15	-6193.5	-1948.9	-8617.1	-12.9
	$\sigma_{cls,Med}$15	-6193.5	-1948.9	-8617.1	-5.3

Pilastro: 19/207 / L 21.84[m] / Sezione 1 B 80 [cm]H 100 [cm]

Af: 4 ø 22 + 26 ø 18 Af=81.37 [cm²] **< 1□22 x 4 V + 6□18 x 2 B + 7□18 x 2 H >**

Staffe: ø 8 4br.x6br./7.5' x 2184.1

Verifiche a Presso-Flessione S.L.U.

Nodo	Comb	N	M_{12}	M_{13}	α_{12}	α_{13}	Sd/Sr
19	2	-135912.4	-67658.6	3883.7	1.00	1.00	0.29
51	2	-112642.4	26064.6	-4186.2	1.00	1.00	0.14
51	2	-89037.3	-11335.7	-4058.2	1.00	1.00	0.09
65	2	-80977.3	-17423.5	1537.1	1.00	1.00	0.09
65	2	-55791.9	-41838.0	7366.5	1.00	1.00	0.20
75	2	-55401.9	-40929.1	7146.0	1.00	1.00	0.20
75	2	-55355.7	-40919.5	7173.0	1.00	1.00	0.20
96	2	-52755.7	-34948.0	5281.3	1.00	1.00	0.16
96	2	-52688.1	-34936.2	5321.8	1.00	1.00	0.16
118	2	-50088.1	-29136.9	3427.4	1.00	1.00	0.13
118	2	-50020.2	-29125.4	3469.1	1.00	1.00	0.13
139	2	-47420.2	-23523.4	1770.7	1.00	1.00	0.10
139	2	-47367.4	-23514.2	1807.0	1.00	1.00	0.10
181	4	-37054.3	3411.5	-9474.5	1.00	1.00	0.06
181	2	-29474.8	-11522.1	-4176.2	1.00	1.00	0.06

207	3	-28786.3	4040.1	6203.8	1.00	1.00	0.04

Verifiche a Taglio

Da [m]	A [m]	V_{d12} [kg]	V_{Rd12} [kg]	V_{d13} [kg]	V_{Rd13} [kg]	Staffe
0.15	21.99	14738.9	90256.6	15491.7	107061.7	ø 8 4br.x6br./7.5'

Verifiche a Presso-Flessione S.L.E.

Nodo	Comb	N [kg]	M_{12} [kgm]	M_{13} [kgm]	σ [kg/cm²]
		Combinazioni Rare			
19	Ft. 8	-99359.3	-45360.8	2637.0	580.1
	$\sigma_{s,c}$ 8	-99359.3	-45360.8	2637.0	-657.8
	$\sigma_{cls,Max}$ 8	-99359.3	-45360.8	2637.0	-48.4
	$\sigma_{cls,Med}$ 8	-99359.3	-45360.8	2637.0	-22.7
51	Ft. 8	-81459.3	17602.5	-2834.4	46.7
	$\sigma_{s,c}$ 8	-81459.3	17602.5	-2834.4	-307.9
	$\sigma_{cls,Max}$ 8	-81459.3	17602.5	-2834.4	-21.9
	$\sigma_{cls,Med}$ 8	-81459.3	17602.5	-2834.4	-9.8
51	Ft. 10	-59236.6	-3441.9	-7149.1	2.2
	$\sigma_{s,c}$ 8	-64769.8	-7936.6	-2735.0	-196.6
	$\sigma_{cls,Max}$ 10	-59236.6	-3441.9	-7149.1	-13.8
	$\sigma_{cls,Med}$ 9	-68390.9	-5718.1	-2068.9	-7.4
65	Ft. 10	-53036.6	-3561.9	-7286.3	16.0
	$\sigma_{s,c}$ 8	-58569.8	-11992.5	833.8	-201.8
	$\sigma_{cls,Max}$ 8	-58569.8	-11992.5	833.8	-14.2
	$\sigma_{cls,Med}$ 8	-58569.8	-11992.5	833.8	-6.8
65	Ft. 8	-40733.1	-28040.2	5064.0	626.9
	$\sigma_{s,c}$ 8	-40733.1	-28040.2	5064.0	-461.6
	$\sigma_{cls,Max}$ 8	-40733.1	-28040.2	5064.0	-34.9
	$\sigma_{cls,Med}$ 8	-40733.1	-28040.2	5064.0	-14.2
75	Ft. 8	-40433.1	-27428.4	4910.1	605.8
	$\sigma_{s,c}$ 8	-40433.1	-27428.4	4910.1	-450.8
	$\sigma_{cls,Max}$ 8	-40433.1	-27428.4	4910.1	-34.1
	$\sigma_{cls,Med}$ 8	-40433.1	-27428.4	4910.1	-13.9
75	Ft. 8	-40397.9	-27422.0	4930.3	606.4
	$\sigma_{s,c}$ 8	-40397.9	-27422.0	4930.3	-451.1
	$\sigma_{cls,Max}$ 8	-40397.9	-27422.0	4930.3	-34.1
	$\sigma_{cls,Med}$ 8	-40397.9	-27422.0	4930.3	-13.9
96	Ft. 8	-38397.9	-23402.4	3611.2	462.8
	$\sigma_{s,c}$ 8	-38397.9	-23402.4	3611.2	-374.8
	$\sigma_{cls,Max}$ 8	-38397.9	-23402.4	3611.2	-28.1
	$\sigma_{cls,Med}$ 8	-38397.9	-23402.4	3611.2	-11.8

Nodo	Comb	N [kg]	M_{12} [kgm]	M_{13} [kgm]	σ [kg/cm²]
96	Ft. 8	-38346.8	-23394.5	3641.3	463.7
	$\sigma_{s,c}$8	-38346.8	-23394.5	3641.3	-375.2
	$\sigma_{cls,Max}$8	-38346.8	-23394.5	3641.3	-28.2
	$\sigma_{cls,Med}$8	-38346.8	-23394.5	3641.3	-11.8
118	Ft. 8	-36346.8	-19489.7	2326.8	327.9
	$\sigma_{s,c}$8	-36346.8	-19489.7	2326.8	-300.9
	$\sigma_{cls,Max}$8	-36346.8	-19489.7	2326.8	-22.4
	$\sigma_{cls,Med}$8	-36346.8	-19489.7	2326.8	-9.8
118	Ft. 8	-36295.6	-19482.0	2357.7	328.7
	$\sigma_{s,c}$8	-36295.6	-19482.0	2357.7	-301.3
	$\sigma_{cls,Max}$8	-36295.6	-19482.0	2357.7	-22.5
	$\sigma_{cls,Med}$8	-36295.6	-19482.0	2357.7	-9.8
139	Ft. 8	-34295.6	-15708.7	1193.1	206.6
	$\sigma_{s,c}$8	-34295.6	-15708.7	1193.1	-232.2
	$\sigma_{cls,Max}$8	-34295.6	-15708.7	1193.1	-17.1
	$\sigma_{cls,Med}$8	-34295.6	-15708.7	1193.1	-7.9
139	Ft. 8	-34256.1	-15702.6	1219.6	207.2
	$\sigma_{s,c}$8	-34256.1	-15702.6	1219.6	-232.5
	$\sigma_{cls,Max}$8	-34256.1	-15702.6	1219.6	-17.1
	$\sigma_{cls,Med}$8	-34256.1	-15702.6	1219.6	-7.9
181	Ft. 10	-26462.7	2379.3	-6368.3	64.8
	$\sigma_{s,c}$10	-26462.7	2379.3	-6368.3	-136.9
	$\sigma_{cls,Max}$10	-26462.7	2379.3	-6368.3	-10.0
	$\sigma_{cls,Med}$10	-26462.7	2379.3	-6368.3	-4.1
181	Ft. 8	-21031.0	-7812.0	-2836.0	114.5
	$\sigma_{s,c}$8	-21031.0	-7812.0	-2836.0	-150.1
	$\sigma_{cls,Max}$8	-21031.0	-7812.0	-2836.0	-11.1
	$\sigma_{cls,Med}$8	-21031.0	-7812.0	-2836.0	-4.2
207	Ft. 10	-12306.1	177.1	-4920.7	82.4
	$\sigma_{s,c}$9	-19529.8	2709.9	3965.1	-100.5
	$\sigma_{cls,Max}$9	-19529.8	2709.9	3965.1	-7.3
	$\sigma_{cls,Med}$10	-12306.1	177.1	-4920.7	-3.1
	Combinazioni Frequenti				
19	Ft. 12	-91301.1	-10777.9	1224.8	-49.1
	$\sigma_{s,c}$12	-91301.1	-10777.9	1224.8	-248.0
	$\sigma_{cls,Max}$12	-91301.1	-10777.9	1224.8	-17.3
	$\sigma_{cls,Med}$12	-91301.1	-10777.9	1224.8	-9.9
51	Ft. 12	-73401.1	4069.7	-1284.2	-73.8
	$\sigma_{s,c}$12	-73401.1	4069.7	-1284.2	-165.0
	$\sigma_{cls,Max}$12	-73401.1	4069.7	-1284.2	-11.4
	$\sigma_{cls,Med}$12	-73401.1	4069.7	-1284.2	-8.0
51	Ft. 13	-51734.7	-3205.0	-391.1	-54.3
	$\sigma_{s,c}$12	-63929.6	-3708.8	-1174.4	-145.6

Nodo	Comb	N [kg]	M_{12} [kgm]	M_{13} [kgm]	σ [kg/cm²]
	$\sigma_{cls,Max}$ 14	-62822.9	-2809.8	-2057.2	-10.0
	$\sigma_{cls,Med}$ 12	-63929.6	-3708.8	-1174.4	-6.9
65	Ft. 14	-56622.9	-4602.7	-3787.4	-17.5
	$\sigma_{s,c}$ 14	-56622.9	-4602.7	-3787.4	-166.7
	$\sigma_{cls,Max}$ 14	-56622.9	-4602.7	-3787.4	-11.7
	$\sigma_{cls,Med}$ 12	-57729.6	-6288.8	-2163.3	-6.3
65	Ft. 12	-45950.3	-6335.0	3966.2	17.3
	$\sigma_{s,c}$ 12	-45950.3	-6335.0	3966.2	-166.2
	$\sigma_{cls,Max}$ 12	-45950.3	-6335.0	3966.2	-11.8
	$\sigma_{cls,Med}$ 12	-45950.3	-6335.0	3966.2	-5.2
75	Ft. 12	-45650.3	-6156.6	3816.7	14.5
	$\sigma_{s,c}$ 12	-45650.3	-6156.6	3816.7	-162.5
	$\sigma_{cls,Max}$ 12	-45650.3	-6156.6	3816.7	-11.6
	$\sigma_{cls,Med}$ 12	-45650.3	-6156.6	3816.7	-5.1
75	Ft. 12	-45613.2	-6155.5	3840.1	14.8
	$\sigma_{s,c}$ 12	-45613.2	-6155.5	3840.1	-162.7
	$\sigma_{cls,Max}$ 12	-45613.2	-6155.5	3840.1	-11.6
	$\sigma_{cls,Med}$ 12	-45613.2	-6155.5	3840.1	-5.1
96	Ft. 12	-43613.2	-4978.5	2538.9	-5.6
	$\sigma_{s,c}$ 12	-43613.2	-4978.5	2538.9	-136.3
	$\sigma_{cls,Max}$ 12	-43613.2	-4978.5	2538.9	-9.6
	$\sigma_{cls,Med}$ 11	-44765.0	-468.4	2205.8	-4.9
96	Ft. 12	-43558.6	-4977.3	2573.0	-5.2
	$\sigma_{s,c}$ 12	-43558.6	-4977.3	2573.0	-136.5
	$\sigma_{cls,Max}$ 12	-43558.6	-4977.3	2573.0	-9.6
	$\sigma_{cls,Med}$ 11	-44710.1	-468.8	2240.3	-4.8
118	Ft. 12	-41558.6	-3824.0	1297.2	-23.8
	$\sigma_{s,c}$ 12	-41558.6	-3824.0	1297.2	-111.4
	$\sigma_{cls,Max}$ 12	-41558.6	-3824.0	1297.2	-7.8
	$\sigma_{cls,Med}$ 11	-42710.1	50.2	1010.0	-4.6
118	Ft. 12	-41505.0	-3822.9	1330.9	-23.4
	$\sigma_{s,c}$ 12	-41505.0	-3822.9	1330.9	-111.6
	$\sigma_{cls,Max}$ 12	-41505.0	-3822.9	1330.9	-7.8
	$\sigma_{cls,Med}$ 11	-42656.3	49.6	1043.8	-4.6
139	Ft. 12	-39505.0	-2696.3	409.0	-38.4
	$\sigma_{s,c}$ 12	-39505.0	-2696.3	409.0	-90.2
	$\sigma_{cls,Max}$ 12	-39505.0	-2696.3	409.0	-6.2
	$\sigma_{cls,Med}$ 11	-40656.3	568.2	209.2	-4.4
139	Ft. 12	-39463.5	-2695.6	437.8	-38.0
	$\sigma_{s,c}$ 12	-39463.5	-2695.6	437.8	-90.4
	$\sigma_{cls,Max}$ 12	-39463.5	-2695.6	437.8	-6.2
	$\sigma_{cls,Med}$ 11	-40614.8	567.6	238.1	-4.4

Nodo	Comb	N [kg]	M_{12} [kgm]	M_{13} [kgm]	σ [kg/cm²]
181	Ft. 14	-32396.7	2185.4	-2320.6	-12.1
	$\sigma_{s,c}$14	-32396.7	2185.4	-2320.6	-93.3
	$\sigma_{cls,Max}$14	-32396.7	2185.4	-2320.6	-6.6
	$\sigma_{cls,Med}$11	-33729.6	2331.1	-1268.5	-3.7
181	Ft. 12	-26738.4	-2761.3	-1614.2	-5.2
	$\sigma_{s,c}$12	-26738.4	-2761.3	-1614.2	-81.8
	$\sigma_{cls,Max}$12	-26738.4	-2761.3	-1614.2	-5.8
	$\sigma_{cls,Med}$11	-27389.7	-1710.6	-1268.5	-3.0
207	Ft. 12	-18921.8	1046.3	4011.0	25.4
	$\sigma_{s,c}$12	-18921.8	1046.3	4011.0	-82.7
	$\sigma_{cls,Max}$12	-18921.8	1046.3	4011.0	-6.0
	$\sigma_{cls,Med}$11	-19573.0	221.3	4350.6	-2.8
Combinazioni Quasi Permanenti					
19	Ft. 15	-97971.7	-45618.3	2544.4	598.0
	$\sigma_{s,c}$15	-97971.7	-45618.3	2544.4	-659.3
	$\sigma_{cls,Max}$15	-97971.7	-45618.3	2544.4	-48.6
	$\sigma_{cls,Med}$15	-97971.7	-45618.3	2544.4	-22.8
51	Ft. 15	-80071.7	18326.2	-2665.0	57.2
	$\sigma_{s,c}$15	-80071.7	18326.2	-2665.0	-311.7
	$\sigma_{cls,Max}$15	-80071.7	18326.2	-2665.0	-22.2
	$\sigma_{cls,Med}$15	-80071.7	18326.2	-2665.0	-10.0
51	Ft. 15	-62340.3	-8462.1	-2562.5	-7.6
	$\sigma_{s,c}$15	-62340.3	-8462.1	-2562.5	-195.2
	$\sigma_{cls,Max}$15	-62340.3	-8462.1	-2562.5	-13.7
	$\sigma_{cls,Med}$15	-62340.3	-8462.1	-2562.5	-6.8
65	Ft. 15	-56140.3	-11883.9	1250.0	20.9
	$\sigma_{s,c}$15	-56140.3	-11883.9	1250.0	-201.9
	$\sigma_{cls,Max}$15	-56140.3	-11883.9	1250.0	-14.3
	$\sigma_{cls,Med}$15	-56140.3	-11883.9	1250.0	-6.7
65	Ft. 15	-37848.2	-28527.1	4475.9	663.5
	$\sigma_{s,c}$15	-37848.2	-28527.1	4475.9	-456.8
	$\sigma_{cls,Max}$15	-37848.2	-28527.1	4475.9	-34.7
	$\sigma_{cls,Med}$15	-37848.2	-28527.1	4475.9	-14.4
75	Ft. 15	-37548.2	-27894.9	4342.2	642.0
	$\sigma_{s,c}$15	-37548.2	-27894.9	4342.2	-446.1
	$\sigma_{cls,Max}$15	-37548.2	-27894.9	4342.2	-33.9
	$\sigma_{cls,Med}$15	-37548.2	-27894.9	4342.2	-14.1
75	Ft. 15	-37514.3	-27888.4	4360.5	642.5
	$\sigma_{s,c}$15	-37514.3	-27888.4	4360.5	-446.4
	$\sigma_{cls,Max}$15	-37514.3	-27888.4	4360.5	-33.9
	$\sigma_{cls,Med}$15	-37514.3	-27888.4	4360.5	-14.1
96	Ft. 15	-35514.3	-23731.9	3232.6	497.0
	$\sigma_{s,c}$15	-35514.3	-23731.9	3232.6	-372.0

Nodo	Comb	N [kg]	M_{12} [kgm]	M_{13} [kgm]	σ [kg/cm²]
	$\sigma_{cls,Max}$15	-35514.3	-23731.9	3232.6	-28.1
	$\sigma_{cls,Med}$15	-35514.3	-23731.9	3232.6	-11.9
96	Ft. 15	-35465.7	-23724.0	3259.5	497.8
	$\sigma_{s,c}$15	-35465.7	-23724.0	3259.5	-372.3
	$\sigma_{cls,Max}$15	-35465.7	-23724.0	3259.5	-28.1
	$\sigma_{cls,Med}$15	-35465.7	-23724.0	3259.5	-11.9
118	Ft. 15	-33465.7	-19682.1	2153.7	359.5
	$\sigma_{s,c}$15	-33465.7	-19682.1	2153.7	-300.0
	$\sigma_{cls,Max}$15	-33465.7	-19682.1	2153.7	-22.5
	$\sigma_{cls,Med}$15	-33465.7	-19682.1	2153.7	-9.9
118	Ft. 15	-33416.9	-19674.5	2181.5	360.3
	$\sigma_{s,c}$15	-33416.9	-19674.5	2181.5	-300.4
	$\sigma_{cls,Max}$15	-33416.9	-19674.5	2181.5	-22.5
	$\sigma_{cls,Med}$15	-33416.9	-19674.5	2181.5	-9.9
139	Ft. 15	-31416.9	-15763.9	1168.2	233.1
	$\sigma_{s,c}$15	-31416.9	-15763.9	1168.2	-231.9
	$\sigma_{cls,Max}$15	-31416.9	-15763.9	1168.2	-17.2
	$\sigma_{cls,Med}$15	-31416.9	-15763.9	1168.2	-7.9
139	Ft. 15	-31380.0	-15757.7	1191.6	233.7
	$\sigma_{s,c}$15	-31380.0	-15757.7	1191.6	-232.2
	$\sigma_{cls,Max}$15	-31380.0	-15757.7	1191.6	-17.2
	$\sigma_{cls,Med}$15	-31380.0	-15757.7	1191.6	-7.9
181	Ft. 15	-24494.9	-3354.7	-2609.8	15.0
	$\sigma_{s,c}$15	-24494.9	-3354.7	-2609.8	-93.9
	$\sigma_{cls,Max}$15	-24494.9	-3354.7	-2609.8	-6.7
	$\sigma_{cls,Med}$15	-24494.9	-3354.7	-2609.8	-2.8
181	Ft. 15	-16654.9	-8374.6	-2609.8	164.5
	$\sigma_{s,c}$15	-16654.9	-8374.6	-2609.8	-156.1
	$\sigma_{cls,Max}$15	-16654.9	-8374.6	-2609.8	-11.7
	$\sigma_{cls,Med}$15	-16654.9	-8374.6	-2609.8	-4.4
207	Ft. 15	-8838.3	4316.7	188.0	59.4
	$\sigma_{s,c}$15	-8838.3	4316.7	188.0	-61.4
	$\sigma_{cls,Max}$15	-8838.3	4316.7	188.0	-4.5
	$\sigma_{cls,Med}$15	-8838.3	4316.7	188.0	-2.2

Pilastro: 20/211 / L 21.84[m] / Sezione 1 B 80 [cm]H 100 [cm]

Af: 4 ø 22 + 26 ø 18 Af=81.37 [cm²] **< 1□22 x 4 V + 6□18 x 2 B + 7□18 x 2 H >**

Staffe: ø 8 4br.x6br./7.5' x 2184.1

Verifiche a Presso-Flessione S.L.U.

Nodo	Comb	N	M_{12}	M_{13}	α_{12}	α_{13}	Sd/Sr
20	2	-114607.4	-43596.3	-724.2	1.00	1.00	0.19
69	4	-76839.8	-5058.3	-15886.2	1.00	1.00	0.10
69	2	-45260.8	-27092.9	-4061.8	1.00	1.00	0.12
79	2	-44870.8	-26342.2	-3979.6	1.00	1.00	0.12
79	2	-44779.1	-26331.7	-3991.5	1.00	1.00	0.12
100	2	-42179.1	-21504.4	-2920.7	1.00	1.00	0.09
100	2	-42046.9	-21488.1	-2944.2	1.00	1.00	0.09
122	2	-39446.9	-17004.0	-1672.1	1.00	1.00	0.07
122	2	-39317.6	-16986.9	-1697.9	1.00	1.00	0.07
143	2	-36717.6	-12899.6	-825.9	1.00	1.00	0.06
143	2	-36620.9	-12885.5	-853.6	1.00	1.00	0.06
182	4	-29710.9	1116.3	-8024.4	1.00	1.00	0.04
182	5	-12006.2	-255.8	12132.2	1.00	2.99	0.08
211	5	-4093.0	-100.7	12132.2	1.00	1.00	0.10

Verifiche a Taglio

Da [m]	A [m]	V_{d12} [kg]	V_{Rd12} [kg]	V_{d13} [kg]	V_{Rd13} [kg]	Staffe
0.15	21.99	10051.1	90256.6	13634.1	107061.7	ø 8 4br.x6br./7.5'

Verifiche a Presso-Flessione S.L.E.

Nodo	Comb	N [kg]	M_{12} [kgm]	M_{13} [kgm]	σ [kg/cm²]
		Combinazioni Rare			
20	Ft. 8	-85231.8	-29079.9	-498.7	204.3
	$\sigma_{s,c}$ 8	-85231.8	-29079.9	-498.7	-412.8
	$\sigma_{cls,Max}$ 8	-85231.8	-29079.9	-498.7	-29.8
	$\sigma_{cls,Med}$ 8	-85231.8	-29079.9	-498.7	-14.6
69	Ft. 10	-56840.1	-3662.0	-10544.7	54.2
	$\sigma_{s,c}$ 10	-56840.1	-3662.0	-10544.7	-233.0
	$\sigma_{cls,Max}$ 10	-56840.1	-3662.0	-10544.7	-16.8
	$\sigma_{cls,Med}$ 10	-56840.1	-3662.0	-10544.7	-7.2
69	Ft. 8	-33700.9	-18068.4	-2867.2	317.8
	$\sigma_{s,c}$ 8	-33700.9	-18068.4	-2867.2	-290.9
	$\sigma_{cls,Max}$ 8	-33700.9	-18068.4	-2867.2	-21.7
	$\sigma_{cls,Med}$ 8	-33700.9	-18068.4	-2867.2	-9.1
79	Ft. 8	-33400.9	-17566.2	-2809.5	303.2
	$\sigma_{s,c}$ 8	-33400.9	-17566.2	-2809.5	-283.2
	$\sigma_{cls,Max}$ 8	-33400.9	-17566.2	-2809.5	-21.1

Nodo	Comb	N [kg]	M_{12} [kgm]	M_{13} [kgm]	σ [kg/cm²]
	$\sigma_{cls,Med}$ 8	-33400.9	-17566.2	-2809.5	-8.9
79	Ft. 8	-33331.0	-17559.2	-2817.8	303.8
	$\sigma_{s,c}$ 8	-33331.0	-17559.2	-2817.8	-283.2
	$\sigma_{cls,Max}$ 8	-33331.0	-17559.2	-2817.8	-21.1
	$\sigma_{cls,Med}$ 8	-33331.0	-17559.2	-2817.8	-8.9
100	Ft. 8	-31331.0	-14329.1	-2068.1	205.6
	$\sigma_{s,c}$ 8	-31331.0	-14329.1	-2068.1	-227.3
	$\sigma_{cls,Max}$ 8	-31331.0	-14329.1	-2068.1	-16.8
	$\sigma_{cls,Med}$ 8	-31331.0	-14329.1	-2068.1	-7.2
100	Ft. 8	-31230.6	-14318.3	-2084.7	206.4
	$\sigma_{s,c}$ 8	-31230.6	-14318.3	-2084.7	-227.5
	$\sigma_{cls,Max}$ 8	-31230.6	-14318.3	-2084.7	-16.8
	$\sigma_{cls,Med}$ 8	-31230.6	-14318.3	-2084.7	-7.2
122	Ft. 8	-29230.6	-11317.0	-1193.3	119.5
	$\sigma_{s,c}$ 8	-29230.6	-11317.0	-1193.3	-173.3
	$\sigma_{cls,Max}$ 8	-29230.6	-11317.0	-1193.3	-12.6
	$\sigma_{cls,Med}$ 8	-29230.6	-11317.0	-1193.3	-5.7
122	Ft. 8	-29132.3	-11305.6	-1211.4	120.1
	$\sigma_{s,c}$ 8	-29132.3	-11305.6	-1211.4	-173.4
	$\sigma_{cls,Max}$ 8	-29132.3	-11305.6	-1211.4	-12.7
	$\sigma_{cls,Med}$ 8	-29132.3	-11305.6	-1211.4	-5.7
143	Ft. 8	-27132.3	-8568.9	-604.5	56.0
	$\sigma_{s,c}$ 8	-27132.3	-8568.9	-604.5	-128.9
	$\sigma_{cls,Max}$ 8	-27132.3	-8568.9	-604.5	-9.3
	$\sigma_{cls,Med}$ 8	-27132.3	-8568.9	-604.5	-4.3
143	Ft. 8	-27059.1	-8559.5	-624.0	56.4
	$\sigma_{s,c}$ 8	-27059.1	-8559.5	-624.0	-129.0
	$\sigma_{cls,Max}$ 8	-27059.1	-8559.5	-624.0	-9.3
	$\sigma_{cls,Med}$ 8	-27059.1	-8559.5	-624.0	-4.3
182	Ft. 10	-21523.1	815.6	-5414.7	44.4
	$\sigma_{s,c}$ 10	-21523.1	815.6	-5414.7	-102.5
	$\sigma_{cls,Max}$ 10	-21523.1	815.6	-5414.7	-7.5
	$\sigma_{cls,Med}$ 10	-21523.1	815.6	-5414.7	-3.4
182	Ft. 10	-19782.1	-236.9	-5414.7	46.7
	$\sigma_{s,c}$ 10	-19782.1	-236.9	-5414.7	-95.0
	$\sigma_{cls,Max}$ 10	-19782.1	-236.9	-5414.7	-7.0
	$\sigma_{cls,Med}$ 10	-19782.1	-236.9	-5414.7	-3.4
211	Ft. 9	-14015.3	2178.1	6449.2	158.6
	$\sigma_{s,c}$ 9	-14015.3	2178.1	6449.2	-135.1
	$\sigma_{cls,Max}$ 9	-14015.3	2178.1	6449.2	-10.3
	$\sigma_{cls,Med}$ 9	-14015.3	2178.1	6449.2	-4.1

Combinazioni Frequenti

Nodo	Comb	N [kg]	M_{12} [kgm]	M_{13} [kgm]	σ [kg/cm²]
20	Ft. 12	-82693.6	-6182.2	-948.2	-75.1
	$\sigma_{s,c}$12	-82693.6	-6182.2	-948.2	-194.0
	$\sigma_{cls,Max}$12	-82693.6	-6182.2	-948.2	-13.4
	$\sigma_{cls,Med}$12	-82693.6	-6182.2	-948.2	-9.0
69	Ft. 13	-49640.9	-2388.6	1095.8	-50.6
	$\sigma_{s,c}$11	-57988.2	-2625.3	2207.2	-137.3
	$\sigma_{cls,Max}$11	-57988.2	-2625.3	2207.2	-9.5
	$\sigma_{cls,Med}$12	-58593.6	-2522.9	2155.7	-6.4
69	Ft. 12	-36653.5	-3079.2	-4218.3	7.5
	$\sigma_{s,c}$12	-36653.5	-3079.2	-4218.3	-126.5
	$\sigma_{cls,Max}$12	-36653.5	-3079.2	-4218.3	-9.0
	$\sigma_{cls,Med}$12	-36653.5	-3079.2	-4218.3	-4.1
79	Ft. 12	-36353.5	-2975.8	-4102.8	5.8
	$\sigma_{s,c}$12	-36353.5	-2975.8	-4102.8	-123.9
	$\sigma_{cls,Max}$12	-36353.5	-2975.8	-4102.8	-8.8
	$\sigma_{cls,Med}$12	-36353.5	-2975.8	-4102.8	-4.0
79	Ft. 12	-36282.1	-2974.7	-4115.0	6.1
	$\sigma_{s,c}$12	-36282.1	-2974.7	-4115.0	-123.9
	$\sigma_{cls,Max}$12	-36282.1	-2974.7	-4115.0	-8.8
	$\sigma_{cls,Med}$12	-36282.1	-2974.7	-4115.0	-4.0
100	Ft. 12	-34282.1	-2309.8	-2941.6	-8.1
	$\sigma_{s,c}$12	-34282.1	-2309.8	-2941.6	-103.4
	$\sigma_{cls,Max}$12	-34282.1	-2309.8	-2941.6	-7.3
	$\sigma_{cls,Med}$14	-34569.6	677.4	-1904.2	-3.7
100	Ft. 12	-34178.9	-2308.0	-2965.4	-7.7
	$\sigma_{s,c}$12	-34178.9	-2308.0	-2965.4	-103.5
	$\sigma_{cls,Max}$12	-34178.9	-2308.0	-2965.4	-7.3
	$\sigma_{cls,Med}$14	-34465.9	676.9	-1915.8	-3.7
122	Ft. 12	-32178.9	-1689.0	-1714.3	-21.8
	$\sigma_{s,c}$12	-32178.9	-1689.0	-1714.3	-82.9
	$\sigma_{cls,Max}$12	-32178.9	-1689.0	-1714.3	-5.8
	$\sigma_{cls,Med}$14	-32465.9	703.1	-1135.8	-3.5
122	Ft. 12	-32078.1	-1687.1	-1740.4	-21.4
	$\sigma_{s,c}$12	-32078.1	-1687.1	-1740.4	-83.0
	$\sigma_{cls,Max}$12	-32078.1	-1687.1	-1740.4	-5.8
	$\sigma_{cls,Med}$14	-32365.0	702.6	-1148.9	-3.5
143	Ft. 13	-23850.8	326.4	-646.5	-29.8
	$\sigma_{s,c}$12	-30078.1	-1120.7	-977.3	-67.6
	$\sigma_{cls,Max}$12	-30078.1	-1120.7	-977.3	-4.7
	$\sigma_{cls,Med}$14	-30365.0	729.3	-844.2	-3.3
143	Ft. 13	-23781.2	326.1	-663.1	-29.5
	$\sigma_{s,c}$12	-30002.4	-1119.1	-1005.9	-67.8

Nodo	Comb	N [kg]	M_{12} [kgm]	M_{13} [kgm]	σ [kg/cm²]
	$\sigma_{cls,Max}$ 12	-30002.4	-1119.1	-1005.9	-4.7
	$\sigma_{cls,Med}$ 14	-30289.2	728.8	-859.5	-3.3
182	Ft. 14	-23319.1	823.8	-1653.0	-15.0
	$\sigma_{s,c}$ 14	-23319.1	823.8	-1653.0	-60.9
	$\sigma_{cls,Max}$ 14	-23319.1	823.8	-1653.0	-4.3
	$\sigma_{cls,Med}$ 14	-23319.1	823.8	-1653.0	-2.5
182	Ft. 13	-15070.0	-456.7	-571.3	-15.2
	$\sigma_{s,c}$ 14	-21578.0	-228.5	-1653.0	-53.2
	$\sigma_{cls,Max}$ 14	-21578.0	-228.5	-1653.0	-3.7
	$\sigma_{cls,Med}$ 14	-21578.0	-228.5	-1653.0	-2.3
211	Ft. 11	-13663.5	-103.2	7123.1	156.7
	$\sigma_{s,c}$ 12	-13378.1	653.8	6703.8	-117.1
	$\sigma_{cls,Max}$ 12	-13378.1	653.8	6703.8	-9.0
	$\sigma_{cls,Med}$ 11	-13663.5	-103.2	7123.1	-4.4
	Combinazioni Quasi Permanenti				
20	Ft. 15	-83452.0	-29013.9	-256.7	209.8
	$\sigma_{s,c}$ 15	-83452.0	-29013.9	-256.7	-408.0
	$\sigma_{cls,Max}$ 15	-83452.0	-29013.9	-256.7	-29.4
	$\sigma_{cls,Med}$ 15	-83452.0	-29013.9	-256.7	-14.6
69	Ft. 15	-59352.0	-2068.5	1320.0	-66.8
	$\sigma_{s,c}$ 15	-59352.0	-2068.5	1320.0	-126.3
	$\sigma_{cls,Max}$ 15	-59352.0	-2068.5	1320.0	-8.7
	$\sigma_{cls,Med}$ 15	-59352.0	-2068.5	1320.0	-6.4
69	Ft. 15	-31085.1	-18385.9	-2066.9	338.7
	$\sigma_{s,c}$ 15	-31085.1	-18385.9	-2066.9	-281.2
	$\sigma_{cls,Max}$ 15	-31085.1	-18385.9	-2066.9	-21.1
	$\sigma_{cls,Med}$ 15	-31085.1	-18385.9	-2066.9	-9.2
79	Ft. 15	-30785.1	-17879.1	-2037.0	324.2
	$\sigma_{s,c}$ 15	-30785.1	-17879.1	-2037.0	-274.0
	$\sigma_{cls,Max}$ 15	-30785.1	-17879.1	-2037.0	-20.5
	$\sigma_{cls,Med}$ 15	-30785.1	-17879.1	-2037.0	-9.0
79	Ft. 15	-30716.7	-17872.1	-2043.0	324.8
	$\sigma_{s,c}$ 15	-30716.7	-17872.1	-2043.0	-274.0
	$\sigma_{cls,Max}$ 15	-30716.7	-17872.1	-2043.0	-20.5
	$\sigma_{cls,Med}$ 15	-30716.7	-17872.1	-2043.0	-9.0
100	Ft. 15	-28716.7	-14611.6	-1541.2	228.1
	$\sigma_{s,c}$ 15	-28716.7	-14611.6	-1541.2	-222.4
	$\sigma_{cls,Max}$ 15	-28716.7	-14611.6	-1541.2	-16.5
	$\sigma_{cls,Med}$ 15	-28716.7	-14611.6	-1541.2	-7.3
100	Ft. 15	-28619.0	-14600.7	-1553.5	228.9
	$\sigma_{s,c}$ 15	-28619.0	-14600.7	-1553.5	-222.4
	$\sigma_{cls,Max}$ 15	-28619.0	-14600.7	-1553.5	-16.5
	$\sigma_{cls,Med}$ 15	-28619.0	-14600.7	-1553.5	-7.3

Nodo	Comb	N [kg]	M_{12} [kgm]	M_{13} [kgm]	σ [kg/cm²]
122	Ft. 15	-26619.0	-11569.1	-900.1	141.3
	$\sigma_{s,c}$15	-26619.0	-11569.1	-900.1	-171.6
	$\sigma_{cls,Max}$15	-26619.0	-11569.1	-900.1	-12.6
	$\sigma_{cls,Med}$15	-26619.0	-11569.1	-900.1	-5.8
122	Ft. 15	-26523.1	-11557.6	-913.5	142.0
	$\sigma_{s,c}$15	-26523.1	-11557.6	-913.5	-171.7
	$\sigma_{cls,Max}$15	-26523.1	-11557.6	-913.5	-12.6
	$\sigma_{cls,Med}$15	-26523.1	-11557.6	-913.5	-5.8
143	Ft. 15	-24523.1	-8790.6	-446.7	73.3
	$\sigma_{s,c}$15	-24523.1	-8790.6	-446.7	-128.3
	$\sigma_{cls,Max}$15	-24523.1	-8790.6	-446.7	-9.3
	$\sigma_{cls,Med}$15	-24523.1	-8790.6	-446.7	-4.4
143	Ft. 15	-24452.3	-8781.2	-461.1	73.7
	$\sigma_{s,c}$15	-24452.3	-8781.2	-461.1	-128.3
	$\sigma_{cls,Max}$15	-24452.3	-8781.2	-461.1	-9.3
	$\sigma_{cls,Med}$15	-24452.3	-8781.2	-461.1	-4.4
182	Ft. 15	-17482.2	-1176.3	410.9	-14.9
	$\sigma_{s,c}$15	-17482.2	-1176.3	410.9	-42.0
	$\sigma_{cls,Max}$15	-17482.2	-1176.3	410.9	-2.9
	$\sigma_{cls,Med}$15	-17482.2	-1176.3	410.9	-1.9
182	Ft. 15	-15741.1	-2229.8	410.9	-3.5
	$\sigma_{s,c}$15	-15741.1	-2229.8	410.9	-47.7
	$\sigma_{cls,Max}$15	-15741.1	-2229.8	410.9	-3.4
	$\sigma_{cls,Med}$15	-15741.1	-2229.8	410.9	-1.7
211	Ft. 15	-7828.0	3664.1	3079.4	122.3
	$\sigma_{s,c}$15	-7828.0	3664.1	3079.4	-101.7
	$\sigma_{cls,Max}$15	-7828.0	3664.1	3079.4	-7.7
	$\sigma_{cls,Med}$15	-7828.0	3664.1	3079.4	-2.6

Pilastro: 21/213 / L 21.84[m] / Sezione 1 B 80 [cm]H 100 [cm]

Af: 4 ø 22 + 26 ø 18 Af=81.37 [cm²] **< 1□22 x 4 V + 6□18 x 2 B + 7□18 x 2 H >**

Staffe: ø 8 4br.x6br./7.5' x 2184.1

Verifiche a Presso-Flessione S.L.U.

Nodo	Comb	N	M_{12}	M_{13}	α_{12}	α_{13}	Sd/Sr
21	2	-82488.8	-45927.2	271.7	1.00	1.00	0.19
71	4	-33044.2	-3009.8	-14280.6	1.00	1.00	0.08
71	2	-34128.0	-25017.4	553.9	1.00	1.00	0.11
81	2	-33738.0	-24283.6	473.9	1.00	1.00	0.11

81	2	-33700.4	-24279.9	459.3	1.00	1.00	0.11
102	2	-31100.4	-19474.3	-77.8	1.00	1.00	0.08
102	2	-31051.4	-19467.4	-96.1	1.00	1.00	0.08
124	2	-28451.4	-14832.5	-408.0	1.00	1.00	0.06
124	2	-28401.6	-14824.9	-426.9	1.00	1.00	0.06
145	2	-25801.6	-10390.9	-336.5	1.00	1.00	0.04
145	2	-25768.2	-10384.2	-348.6	1.00	1.00	0.04
183	4	-12671.2	-753.6	-6707.2	1.00	1.00	0.04
183	4	-11705.5	-1278.4	-6707.2	1.00	1.00	0.04
213	2	-5690.5	16480.8	-1259.8	1.00	1.00	0.10

Verifiche a Taglio

Da [m]	A [m]	V_{d12} [kg]	V_{Rd12} [kg]	V_{d13} [kg]	V_{Rd13} [kg]	Staffe
0.15	21.99	19616.8	90256.6	12890.6	107061.7	ø 8 4br.x6br./7.5'

Verifiche a Presso-Flessione S.L.E.

Nodo	Comb	N [kg]	M_{12} [kgm]	M_{13} [kgm]	σ [kg/cm²]
		Combinazioni Rare			
21	Ft. 8	-62000.1	-30695.1	207.0	412.0
	$\sigma_{s,c}$ 8	-62000.1	-30695.1	207.0	-419.0
	$\sigma_{cls,Max}$ 8	-62000.1	-30695.1	207.0	-30.9
	$\sigma_{cls,Med}$ 8	-62000.1	-30695.1	207.0	-15.3
71	Ft. 10	-25823.7	-2212.2	-9557.1	170.6
	$\sigma_{s,c}$ 10	-25823.7	-2212.2	-9557.1	-186.5
	$\sigma_{cls,Max}$ 10	-25823.7	-2212.2	-9557.1	-14.0
	$\sigma_{cls,Med}$ 10	-25823.7	-2212.2	-9557.1	-6.0
71	Ft. 8	-25691.9	-16814.6	388.8	309.4
	$\sigma_{s,c}$ 8	-25691.9	-16814.6	388.8	-229.8
	$\sigma_{cls,Max}$ 8	-25691.9	-16814.6	388.8	-17.3
	$\sigma_{cls,Med}$ 8	-25691.9	-16814.6	388.8	-8.4
81	Ft. 8	-25391.9	-16324.2	334.4	295.0
	$\sigma_{s,c}$ 8	-25391.9	-16324.2	334.4	-222.5
	$\sigma_{cls,Max}$ 8	-25391.9	-16324.2	334.4	-16.7
	$\sigma_{cls,Med}$ 8	-25391.9	-16324.2	334.4	-8.1
81	Ft. 8	-25363.0	-16321.7	323.2	295.0
	$\sigma_{s,c}$ 8	-25363.0	-16321.7	323.2	-222.3
	$\sigma_{cls,Max}$ 8	-25363.0	-16321.7	323.2	-16.7
	$\sigma_{cls,Med}$ 8	-25363.0	-16321.7	323.2	-8.1

Nodo	Comb	N [kg]	M_{12} [kgm]	M_{13} [kgm]	σ [kg/cm²]
102	Ft. 8	-23363.0	-13109.9	-52.7	204.2
	$\sigma_{s,c}$8	-23363.0	-13109.9	-52.7	-177.1
	$\sigma_{cls,Max}$8	-23363.0	-13109.9	-52.7	-13.1
	$\sigma_{cls,Med}$8	-23363.0	-13109.9	-52.7	-6.5
102	Ft. 8	-23325.2	-13105.3	-66.9	204.6
	$\sigma_{s,c}$8	-23325.2	-13105.3	-66.9	-177.2
	$\sigma_{cls,Max}$8	-23325.2	-13105.3	-66.9	-13.2
	$\sigma_{cls,Med}$8	-23325.2	-13105.3	-66.9	-6.5
124	Ft. 8	-21325.2	-10007.5	-295.2	128.2
	$\sigma_{s,c}$8	-21325.2	-10007.5	-295.2	-140.4
	$\sigma_{cls,Max}$8	-21325.2	-10007.5	-295.2	-10.3
	$\sigma_{cls,Med}$8	-21325.2	-10007.5	-295.2	-5.0
124	Ft. 8	-21286.9	-10002.3	-309.7	128.6
	$\sigma_{s,c}$8	-21286.9	-10002.3	-309.7	-140.6
	$\sigma_{cls,Max}$8	-21286.9	-10002.3	-309.7	-10.4
	$\sigma_{cls,Med}$8	-21286.9	-10002.3	-309.7	-5.0
145	Ft. 8	-19286.9	-7038.5	-259.7	59.4
	$\sigma_{s,c}$8	-19286.9	-7038.5	-259.7	-101.2
	$\sigma_{cls,Max}$8	-19286.9	-7038.5	-259.7	-7.3
	$\sigma_{cls,Med}$8	-19286.9	-7038.5	-259.7	-3.5
145	Ft. 8	-19261.2	-7034.1	-269.0	59.6
	$\sigma_{s,c}$8	-19261.2	-7034.1	-269.0	-101.2
	$\sigma_{cls,Max}$8	-19261.2	-7034.1	-269.0	-7.3
	$\sigma_{cls,Med}$8	-19261.2	-7034.1	-269.0	-3.5
183	Ft. 10	-9611.9	-587.2	-4513.8	97.5
	$\sigma_{s,c}$10	-9611.9	-587.2	-4513.8	-81.2
	$\sigma_{cls,Max}$10	-9611.9	-587.2	-4513.8	-6.2
	$\sigma_{cls,Med}$10	-9611.9	-587.2	-4513.8	-2.8
183	Ft. 10	-8869.0	-991.0	-4513.8	111.6
	$\sigma_{s,c}$10	-8869.0	-991.0	-4513.8	-86.8
	$\sigma_{cls,Max}$10	-8869.0	-991.0	-4513.8	-6.7
	$\sigma_{cls,Med}$10	-8869.0	-991.0	-4513.8	-2.8
213	Ft. 8	-3816.9	10879.5	-858.4	363.2
	$\sigma_{s,c}$8	-3816.9	10879.5	-858.4	-149.9
	$\sigma_{cls,Max}$8	-3816.9	10879.5	-858.4	-11.9
	$\sigma_{cls,Med}$8	-3816.9	10879.5	-858.4	-5.3
	Combinazioni Frequenti				
21	Ft. 12	-59457.4	-6912.0	-6.1	-40.4
	$\sigma_{s,c}$12	-59457.4	-6912.0	-6.1	-153.1
	$\sigma_{cls,Max}$12	-59457.4	-6912.0	-6.1	-10.6
	$\sigma_{cls,Med}$12	-59457.4	-6912.0	-6.1	-6.4
71	Ft. 14	-32942.2	-1773.4	-1697.9	-22.5
	$\sigma_{s,c}$14	-32942.2	-1773.4	-1697.9	-84.7

Nodo	Comb	N [kg]	M_{12} [kgm]	M_{13} [kgm]	σ [kg/cm²]
	$\sigma_{cls,Max}$ 14	-32942.2	-1773.4	-1697.9	-5.9
	$\sigma_{cls,Med}$ 12	-35357.4	-1132.5	267.1	-3.8
71	Ft. 12	-26635.0	-4203.6	167.1	-7.6
	$\sigma_{s,c}$ 12	-26635.0	-4203.6	167.1	-79.1
	$\sigma_{cls,Max}$ 12	-26635.0	-4203.6	167.1	-5.5
	$\sigma_{cls,Med}$ 11	-26664.6	-1093.6	124.2	-2.9
81	Ft. 12	-26335.0	-4087.9	109.3	-8.6
	$\sigma_{s,c}$ 12	-26335.0	-4087.9	109.3	-77.1
	$\sigma_{cls,Max}$ 12	-26335.0	-4087.9	109.3	-5.4
	$\sigma_{cls,Med}$ 11	-26364.6	-1071.4	67.2	-2.9
81	Ft. 12	-26305.7	-4087.3	97.3	-8.7
	$\sigma_{s,c}$ 12	-26305.7	-4087.3	97.3	-76.9
	$\sigma_{cls,Max}$ 12	-26305.7	-4087.3	97.3	-5.4
	$\sigma_{cls,Med}$ 11	-26335.2	-1071.4	55.0	-2.9
102	Ft. 12	-24305.7	-3328.4	-330.7	-9.3
	$\sigma_{s,c}$ 12	-24305.7	-3328.4	-330.7	-69.8
	$\sigma_{cls,Max}$ 12	-24305.7	-3328.4	-330.7	-4.9
	$\sigma_{cls,Med}$ 11	-24335.2	-924.8	-377.0	-2.6
102	Ft. 12	-24266.7	-3327.5	-346.2	-9.1
	$\sigma_{s,c}$ 12	-24266.7	-3327.5	-346.2	-69.9
	$\sigma_{cls,Max}$ 12	-24266.7	-3327.5	-346.2	-4.9
	$\sigma_{cls,Med}$ 11	-24296.0	-924.8	-392.8	-2.6
124	Ft. 12	-22266.7	-2592.2	-614.3	-9.2
	$\sigma_{s,c}$ 12	-22266.7	-2592.2	-614.3	-63.3
	$\sigma_{cls,Max}$ 12	-22266.7	-2592.2	-614.3	-4.4
	$\sigma_{cls,Med}$ 11	-22296.0	-779.3	-668.7	-2.4
124	Ft. 12	-22227.1	-2591.2	-630.5	-8.9
	$\sigma_{s,c}$ 12	-22227.1	-2591.2	-630.5	-63.4
	$\sigma_{cls,Max}$ 12	-22227.1	-2591.2	-630.5	-4.4
	$\sigma_{cls,Med}$ 11	-22256.2	-779.4	-685.2	-2.4
145	Ft. 12	-20227.1	-1883.6	-629.4	-11.4
	$\sigma_{s,c}$ 12	-20227.1	-1883.6	-629.4	-54.4
	$\sigma_{cls,Max}$ 12	-20227.1	-1883.6	-629.4	-3.8
	$\sigma_{cls,Med}$ 11	-20256.2	-634.9	-701.0	-2.2
145	Ft. 12	-20199.7	-1882.8	-640.8	-11.3
	$\sigma_{s,c}$ 12	-20199.7	-1882.8	-640.8	-54.4
	$\sigma_{cls,Max}$ 12	-20199.7	-1882.8	-640.8	-3.8
	$\sigma_{cls,Med}$ 11	-20228.3	-635.0	-712.8	-2.2
183	Ft. 14	-12761.8	-205.6	-942.0	-9.8
	$\sigma_{s,c}$ 14	-12761.8	-205.6	-942.0	-31.7
	$\sigma_{cls,Max}$ 14	-12761.8	-205.6	-942.0	-2.2
	$\sigma_{cls,Med}$ 11	-13343.3	-147.2	-60.6	-1.4

Nodo	Comb	N [kg]	M_{12} [kgm]	M_{13} [kgm]	σ [kg/cm²]
183	Ft. 14	-12018.9	-609.5	-942.0	-5.3
	$\sigma_{s,c}$14	-12018.9	-609.5	-942.0	-33.8
	$\sigma_{cls,Max}$14	-12018.9	-609.5	-942.0	-2.4
	$\sigma_{cls,Med}$11	-12600.5	-551.3	-60.6	-1.4
213	Ft. 12	-4755.3	2221.7	-204.2	30.6
	$\sigma_{s,c}$12	-4755.3	2221.7	-204.2	-33.4
	$\sigma_{cls,Max}$12	-4755.3	2221.7	-204.2	-2.5
	$\sigma_{cls,Med}$12	-4755.3	2221.7	-204.2	-1.1
Combinazioni Quasi Permanenti					
21	Ft. 15	-61434.3	-30620.7	297.6	415.8
	$\sigma_{s,c}$15	-61434.3	-30620.7	297.6	-418.8
	$\sigma_{cls,Max}$15	-61434.3	-30620.7	297.6	-30.9
	$\sigma_{cls,Med}$15	-61434.3	-30620.7	297.6	-15.3
71	Ft. 15	-37334.3	951.6	174.8	-51.3
	$\sigma_{s,c}$15	-37334.3	951.6	174.8	-70.2
	$\sigma_{cls,Max}$15	-37334.3	951.6	174.8	-4.7
	$\sigma_{cls,Med}$15	-37334.3	951.6	174.8	-4.0
71	Ft. 15	-24518.2	-16936.9	429.7	326.6
	$\sigma_{s,c}$15	-24518.2	-16936.9	429.7	-231.4
	$\sigma_{cls,Max}$15	-24518.2	-16936.9	429.7	-17.5
	$\sigma_{cls,Med}$15	-24518.2	-16936.9	429.7	-8.4
81	Ft. 15	-24218.2	-16447.6	386.1	312.3
	$\sigma_{s,c}$15	-24218.2	-16447.6	386.1	-224.3
	$\sigma_{cls,Max}$15	-24218.2	-16447.6	386.1	-16.9
	$\sigma_{cls,Med}$15	-24218.2	-16447.6	386.1	-8.2
81	Ft. 15	-24189.4	-16445.1	375.0	312.3
	$\sigma_{s,c}$15	-24189.4	-16445.1	375.0	-224.1
	$\sigma_{cls,Max}$15	-24189.4	-16445.1	375.0	-16.9
	$\sigma_{cls,Med}$15	-24189.4	-16445.1	375.0	-8.2
102	Ft. 15	-22189.4	-13240.9	61.6	220.0
	$\sigma_{s,c}$15	-22189.4	-13240.9	61.6	-178.2
	$\sigma_{cls,Max}$15	-22189.4	-13240.9	61.6	-13.3
	$\sigma_{cls,Med}$15	-22189.4	-13240.9	61.6	-6.6
102	Ft. 15	-22152.0	-13236.4	47.9	220.1
	$\sigma_{s,c}$15	-22152.0	-13236.4	47.9	-178.0
	$\sigma_{cls,Max}$15	-22152.0	-13236.4	47.9	-13.3
	$\sigma_{cls,Med}$15	-22152.0	-13236.4	47.9	-6.6
124	Ft. 15	-20152.0	-10146.0	-159.3	140.4
	$\sigma_{s,c}$15	-20152.0	-10146.0	-159.3	-139.5
	$\sigma_{cls,Max}$15	-20152.0	-10146.0	-159.3	-10.3
	$\sigma_{cls,Med}$15	-20152.0	-10146.0	-159.3	-5.1
124	Ft. 15	-20114.1	-10140.9	-173.3	140.8

Nodo	Comb	N [kg]	M_{12} [kgm]	M_{13} [kgm]	σ [kg/cm²]
	$\sigma_{s,c}$15	-20114.1	-10140.9	-173.3	-139.7
	$\sigma_{cls,Max}$15	-20114.1	-10140.9	-173.3	-10.3
	$\sigma_{cls,Med}$15	-20114.1	-10140.9	-173.3	-5.1
145	Ft. 15	-18114.1	-7184.6	-144.5	69.3
	$\sigma_{s,c}$15	-18114.1	-7184.6	-144.5	-100.8
	$\sigma_{cls,Max}$15	-18114.1	-7184.6	-144.5	-7.3
	$\sigma_{cls,Med}$15	-18114.1	-7184.6	-144.5	-3.6
145	Ft. 15	-18088.9	-7180.1	-153.1	69.5
	$\sigma_{s,c}$15	-18088.9	-7180.1	-153.1	-100.9
	$\sigma_{cls,Max}$15	-18088.9	-7180.1	-153.1	-7.3
	$\sigma_{cls,Med}$15	-18088.9	-7180.1	-153.1	-3.6
183	Ft. 15	-11203.9	1957.3	789.7	6.2
	$\sigma_{s,c}$15	-11203.9	1957.3	789.7	-42.4
	$\sigma_{cls,Max}$15	-11203.9	1957.3	789.7	-3.0
	$\sigma_{cls,Med}$15	-11203.9	1957.3	789.7	-1.3
183	Ft. 15	-10461.1	1554.7	789.7	3.7
	$\sigma_{s,c}$15	-10461.1	1554.7	789.7	-37.6
	$\sigma_{cls,Max}$15	-10461.1	1554.7	789.7	-2.7
	$\sigma_{cls,Med}$15	-10461.1	1554.7	789.7	-1.2
213	Ft. 15	-2644.6	10678.3	-877.3	371.5
	$\sigma_{s,c}$15	-2644.6	10678.3	-877.3	-146.6
	$\sigma_{cls,Max}$15	-2644.6	10678.3	-877.3	-11.7
	$\sigma_{cls,Med}$15	-2644.6	10678.3	-877.3	-5.1

3.3 Verifiche plinti

Modalità di verifica

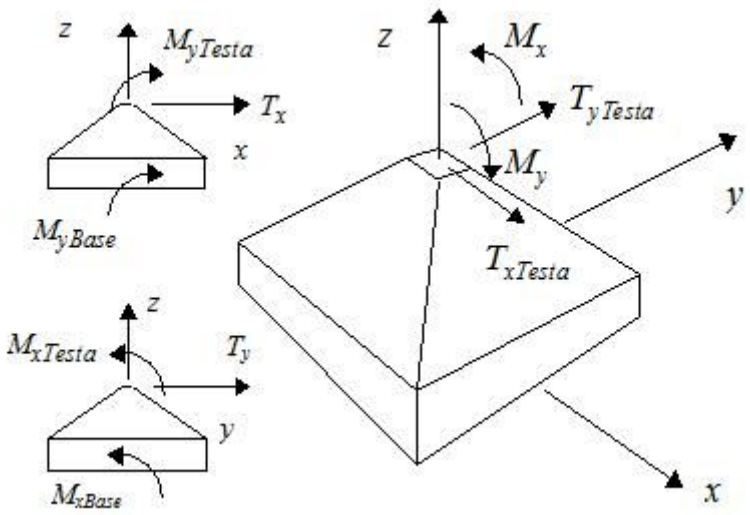

Il progetto e la verifica dei plinti in C.A. viene effettuato considerando come azioni agenti:

- Lo sforzo normale agente sul plinto.
- I momenti (come da figura) agenti sul plinto e dedotti dal calcolo.
- I momenti di trasporto **T*h** (dove **T** è il taglio ed **h** l'altezza del plinto)

Con tali sollecitazioni vengono calcolate le pressioni sul terreno (considerato come non reagente a trazione) e da queste calcolate le azioni di progetto per il dimensionamento delle armature.

Premesso che la verifica viene sempre condotta nella sezione del colletto a filo pilastro, indicando con l'angolo compreso tra la base del plinto e la congiungente lo spigolo di detta base con l'attacco del pilastro, possono presentarsi i seguenti casi:

- L'angolo è maggiore di trenta (> 30') gradi nel qual caso il plinto è considerato tozzo. La forza di trazione **F** con la quale viene dimensionata l'armatura di base vale:

$$F = \frac{R \times (B - b)}{8 \times H_{Plinto}}$$

dove:

R	risultante delle pressioni del terreno
B	base del Plinto
b	larghezza minima del pilastro sovrastante
H_{Plinto}	altezza totale del plinto

- L'angolo è minore di trenta (< 30') gradi nel qual caso il plinto è considerato snello ed il calcolo è svolto in maniera consueta considerando, per i plinti svasati, sezioni equivalenti di dimensioni:

$$s_1 = h_{zoc} - copr$$

$$s_2 = H_{pl} - (h_{zoc} + copr)$$

$$H_{eq} = s_1 + \frac{s_2 \cdot (2 \cdot b + b_1)}{3 \cdot b}$$

$$B_{eq} = \frac{2 \cdot b \cdot H_{eq}}{3 \cdot (s_1 + s_2)}$$

-

e per plinti cubici o a pozzetto:

$$d = H_{pl} - copr$$

$$s_1 = \frac{d}{3}$$

$$s_2 = \frac{2}{3} \cdot d$$

$$H_{eq} = s_1 + \frac{s_2 \cdot (2 \cdot b + b_1)}{3 \cdot b}$$

$$B_{eq} = \frac{2 \cdot b \cdot H_{eq}}{3 \cdot (s_1 + s_2)}$$

dove:

H_{pl}
altezza del plinto

copr
spessore del copriferro

b
larghezza del plinto alla base

b1
larghezza del plinto al colletto

A favore di sicurezza si è in ogni caso considerata (ai fini delle verifiche) la pressione massima sul terreno come agente sull'intera sezione del plinto.

Verifica dei plinti a bicchiere

Spinta sulla parte superiore del pozzetto

$F_1 = V_{sd} + 3/2\ M_{sd}/h$

Contro-Spinta sulla parte inferiore (opposta) del pozzetto

$F_2 = 3/2\ Msd/h$

Azione Verticale

$F_3 = N_{sd}$

Verifica bordi frontali

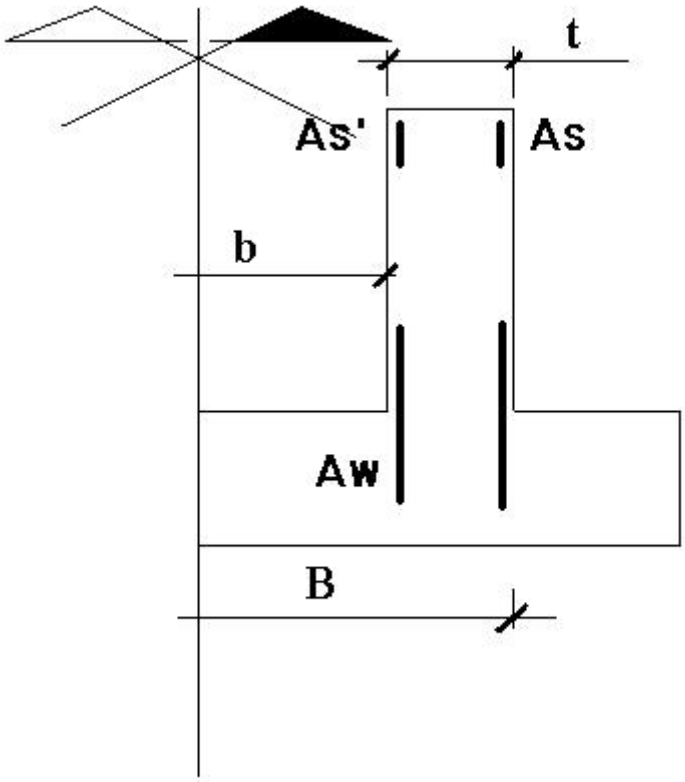

posto:

$\rho'=As'/As$

$\alpha_c=Es/Ec$

d = t - copriferro

z=0.9 d

c = (B + t)/ 2 - b/4 = B - 2 * (t + copriferro)

$\xi=c/z$

Verifica delle barre orizzontali (cerchiatura) del bordo superiore del pozzetto

$F_1 < 2\ As\ (1 + \rho')\ f_{yd} / \xi$

Verifica del calcestruzzo

$F_1 < 2 * 0.4 * d\ (h/2)\ f_{ctd} / (1 + \rho')$

Verifica alla base della biella compressa del telaio di cerchiatura del pozzetto

$F_2 < (t\ (b + t) + \alpha_c\ A_w)\ f_{ctd}$

Verifica bordi laterali

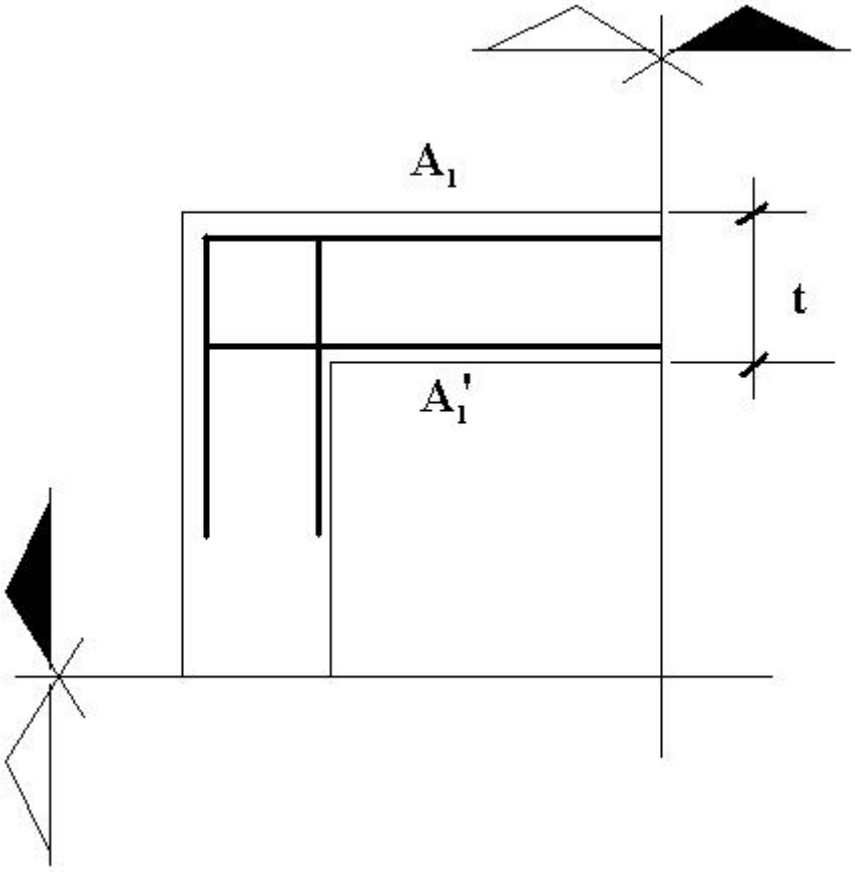

Verifica a 'tirante' delle armature di cerchiatura superiori del pozzetto

$F_1 < 2 A_1 f_{yd} / (1 - \xi_c / z)$

$F_1 < 2 A f_{yd} / (1 - \xi_c / z)$

Verifica pareti laterali del pozzetto

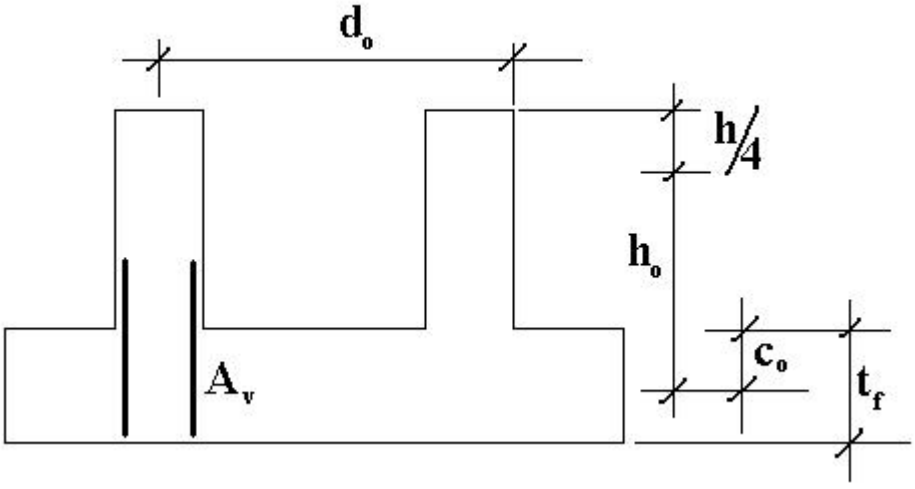

posto:

d_o [illegible] t [illegible]

$c_o = \min(0.2\ d_o, t_f/2)$

[illegible]$_o = h_o/d_o$

Verifica delle barre verticali (tiranti) del pozzetto

$F_1 < 2\ A_v\ f_{yd}$ / [illegible]

Verifica della biella compressa di calcestruzzo

$F_1 < 2 * 0.4 * do\ t\ f_{ctd}$ / (1 + [illegible])

Sezioni Impiegate:

Sez. Num.	Info	Dimensioni	Criterio	Calcestruzzo	f_{ck} [kg/cm²]	f_{cd} [kg/cm²]	σ_{RARE} [kg/cm²]	σ_{FREQ} [kg/cm²]	σ_{QP} [kg/cm²]	Acciaio	f_{yk} [kg/cm²]	f_{yd} [kg/cm²]	σ_{yRARE} [kg/cm²]	σ_{yFREQ} [kg/cm²]	σ_{yQP} [kg/cm²]	Copriferro [cm]
1	Plinto tozzo esterno	B 200 [cm] H 200 [cm] Hp 80 [cm] Terreno numero 1	Verplin	C25/30	250.0	141.7	150.0	250.0	112.5	B 450 C	4500.0	3913.0	3600.0	4500.0	4500.0	3.00
2	Plinto tozzo Plinto estremità	B 140 [cm] H 200 [cm] Hp 80 [cm] Terreno numero 1	Verplin	C25/30	250.0	141.7	150.0	250.0	112.5	B 450 C	4500.0	3913.0	3600.0	4500.0	4500.0	3.00
3	Plinto tozzo estremità alto	B 200 [cm] H 150 [cm] Hp 80 [cm] Terreno numero 1	Verplin	C25/30	250.0	141.7	150.0	250.0	112.5	B 450 C	4500.0	3913.0	3600.0	4500.0	4500.0	3.00

Fattore di sovraresistenza $\gamma_{R,d}$=1.10
Fattore di sovraresistenza Bicchieri $\gamma_{R,d}$=1.20

Verifiche dei plinti a bicchiere

- Percentuale dell'armatura di parete utilizzata per la verifica del tirante nella parete ortogonale 0 %
- La resistenza della biella compressa in calcestruzzo di parete è valutata come $S_R = 0.4\ d\ h\ f_{cd}$ / (1 + λ^2)

Verifiche Plinti:

Nodo	Sez.	Comb. Critica	N_c [kg]	$M_{c,Base}$ [kgm]	$V_{c,Base}$ [kg]	[illegible]$_{Ter}$ [kg/cm²]	Armature	$B_{eq.}$ [cm]	$H_{eq.}$ [cm]	M_d [kgm]	M_{Rd} [kgm]	N_d [kg]	N_{Rsd} [kg]	V_{sd} [kg/m]	V_{rd} [kg/m]
1	1	B 2	-17850.9	-7834.6	-507.2	1.1	9[illegible]14	Tozzo				13164.6	91946.1	0.0	462.0
		H 2	-17850.9	405.7	-9793.3	1.1	9[illegible]14	Tozzo				10970.5	103325.5	0.0	462.0
5	1	B 2	-76314.7	-6622.7	-249.7	2.4	9[illegible]14	Tozzo				29034.7	91946.1	0.0	462.0
		H 2	-76314.7	199.8	-8278.4	2.4	9[illegible]14	Tozzo				24195.6	103325.5	0.0	462.0
6	2	B 4	-72640.3	553.2	3847.9	3.1	9[illegible]14	Tozzo				18748.4	137314.2	0.0	462.0
		H 4	-72640.3	-3078.3	691.4	3.1	7[illegible]14	Tozzo				21873.1	80364.3	0.0	462.0
11	2	B 2	-30414.5	-5480.8	-82.0	1.7	9[illegible]14	Tozzo				10101.0	137314.2	0.0	462.0
		H 2	-30414.5	65.6	-6851.0	1.7	7[illegible]14	Tozzo				11784.5	80364.3	0.0	462.0
13	1	B 2	-22998.8	-5466.4	55.8	1.0	9[illegible]14	Tozzo				11859.6	91946.1	0.0	462.0

		H 2	-22998.8	-44.6	-6833.1	1.0	9□14	Tozzo		11859.6	91946.1	0.0	462.0
14	1	B 4	-77903.0	-706.5	3209.8	2.2	9□14	Tozzo		26317.7	91946.1	0.0	462.0
		H 4	-77903.0	-2567.8	-883.1	2.2	9□14	Tozzo		26317.7	91946.1	0.0	462.0
15	1	B 2	-49464.8	-5620.9	267.2	1.7	9□14	Tozzo		20090.7	91946.1	0.0	462.0
		H 2	-49464.8	-213.8	-7026.1	1.7	9□14	Tozzo		20090.7	91946.1	0.0	462.0
18	3	B 2	-33919.2	-6938.3	338.0	2.1	7□14	Tozzo		18745.1	71513.6	0.0	462.0
		H 2	-33919.2	-270.4	-8672.9	2.1	9□14	Tozzo		10413.9	149618.3	0.0	462.0
19	3	B 2	-93052.6	-8377.5	901.7	4.3	7□14	Tozzo		38618.0	71513.6	0.0	462.0
		H 2	-93052.6	-721.3	-10471.9	4.3	9□14	Tozzo		21454.4	149618.3	0.0	462.0
20	1	B 2	-85891.1	-2712.3	-268.1	2.4	9□14	Tozzo		28401.4	91946.1	0.0	462.0
		H 2	-85891.1	214.5	-3390.4	2.4	9□14	Tozzo		23667.8	103325.5	0.0	462.0
21	2	B 2	-63858.7	-3168.4	-15.3	2.6	9□14	Tozzo		15732.1	137314.2	0.0	462.0
		H 2	-63858.7	12.3	-3960.5	2.6	7□14	Tozzo		18354.1	80364.3	0.0	462.0

VERIFICA PLINTI CABINA GRUISTA E SCALE ESTERNE

Sezioni Impiegate:

Sez. Num.	Info	Dimensioni	Criterio	Calcestruzzo	f_{ck} [kg/cm²]	f_{cd} [kg/cm²]	σ_{RARE} [kg/cm²]	σ_{FREQ} [kg/cm²]	σ_{QP} [kg/cm²]	Acciaio	f_{yk} [kg/cm²]	f_{yd} [kg/cm²]	σ_{yRARE} [kg/cm²]	σ_{yFREQ} [kg/cm²]	σ_{yQP} [kg/cm²]	Copriferro [cm]
4	Plinto tozzo Plinto gruista	B 100 [cm] H 100 [cm] Hp 80 [cm] Terreno numero 1	Verplin	C25/30	250.0	141.7	150.0	250.0	112.5	B 450 C	4500.0	3913.0	3600.0	4500.0	4500.0	3.00
5	Plinto tozzo Plinto scale esterne	B 80 [cm] H 80 [cm] Hp 80 [cm] Terreno numero 1	Verplin	C25/30	250.0	141.7	150.0	250.0	112.5	B 450 C	4500.0	3913.0	3600.0	4500.0	4500.0	3.00
1	Plinto tozzo esterno	B 200 [cm] H 200 [cm] Hp 80 [cm] Terreno numero 1	Verplin	C25/30	250.0	141.7	150.0	250.0	112.5	B 450 C	4500.0	3913.0	3600.0	4500.0	4500.0	3.00

Fattore di sovraresistenza $\gamma_{R,d}$=1.10
Fattore di sovraresistenza Bicchieri $\gamma_{R,d}$=1.20

Verifiche dei plinti a bicchiere

- Percentuale dell'armatura di parete utilizzata per la verifica del tirante nella parete ortogonale 0 %
- La resistenza della biella compressa in calcestruzzo di parete è valutata come S_R=0.4 d h f_{cd} / (1 + λ^2)

Verifiche Plinti:

Nodo	Sez.	Comb. Critica	N_c [kg]	$M_{c,Base}$ [kgm]	$V_{c,Base}$ [kg]	□Ter [kg/cm²]	Armature	$B_{eq.}$ [cm]	$H_{eq.}$ [cm]	M_d [kgm]	M_{Rd} [kgm]	N_d [kg]	N_{Rsd} [kg]	V_{sd} [kg/m]	V_{rd} [kg/m]
2	4	B 2	-2888.8	-886.0	-328.2	1.5	14□5	Tozzo				5331.0	70488.9	0.0	462.0
		H 2	-2888.8	-405.1	890.8	1.5	14□5	Tozzo				5331.0	70488.9	0.0	462.0
3	4	B 2	-2830.0	-843.5	-44.7	1.0	14□5	Tozzo				3370.9	70488.9	0.0	462.0
		H 2	-2830.0	28.9	817.3	1.0	14□5	Tozzo				3370.9	70488.9	0.0	462.0

5	5	B 1	-7161.3	188.4	-130.9	1.6	14□4	Tozzo	3217.5	66497.0	0.0	462.0
		H 1	-7161.3	-229.6	24.6	1.6	14□4	Tozzo	3217.5	66497.0	0.0	462.0
6	5	B 1	-2384.4	542.4	-170.7	1.8	14□4	Tozzo	3575.0	66497.0	0.0	462.0
		H 1	-2384.4	-276.5	-293.7	1.8	14□4	Tozzo	3575.0	66497.0	0.0	462.0
11	1	B 2	-103186.6	-5301.5	-2027.4	3.1	14□9	Tozzo	37187.0	91946.1	0.0	462.0
		H 2	-103186.6	-1621.9	6626.8	3.1	14□9	Tozzo	30989.1	103325.5	0.0	462.0

3.4 Verifiche elementi in acciaio

3.4.1 Percentuale di sfruttamento dei profilati metallici

Distribuzione degli elementi (n. di elementi in ogni campo)

Sezione Numero	Sezione tipo	Sd/Sr ≤ 33%	Sd/Sr ≤ 66%	Sd/Sr ≤ 100%	Sd/Sr ≤ 1000%	Sd/Sr ≤ 1004%	Sd/Sr ≤ 1005%	Sd/Sr ≤ 1006%
2	HEB 300/Baraccatura	100.00 (72)	0.00 (0)	0.00 (0)	0.00 (0)	0.00 (0)	0.00 (0)	0.00 (0)
3	HEB 200/Appoggio setto	100.00 (2)	0.00 (0)	0.00 (0)	0.00 (0)	0.00 (0)	0.00 (0)	0.00 (0)
2	HEA 500/Carroponte inf.	100.00 (4)	0.00 (0)	0.00 (0)	0.00 (0)	0.00 (0)	0.00 (0)	0.00 (0)
6	Tubi Ret H 120x80x6.3/Baraccatura	92.94 (79)	7.06 (6)	0.00 (0)	0.00 (0)	0.00 (0)	0.00 (0)	0.00 (0)
9	HEB 600/Trave_carroponte-sup	100.00 (7)	0.00 (0)	0.00 (0)	0.00 (0)	0.00 (0)	0.00 (0)	0.00 (0)
14	IPE 500/Appoggio-acciaio	100.00 (1)	0.00 (0)	0.00 (0)	0.00 (0)	0.00 (0)	0.00 (0)	0.00 (0)

Elementi maggiormente sollecitati
Elementi Pilastro

Sezione	Min Elemento nodi	Min S_D/S_R	Max Elemento nodi	Max S_D/S_R
2 HEB 300/Baraccatura	123 144	0.01	40 86	0.22
3 HEB 200/Appoggio setto	170 193	0.09	110 170	0.10

Elementi Trave

Sezione	Min Elemento nodi	Min S_D/S_R	Max Elemento nodi	Max S_D/S_R
2 HEA 500/Carroponte inf.	29 30	0.03	25 26	0.29
6 Tubi Ret H 120x80x6.3/Baraccatura	76 77	0.02	132 149	0.38
9 HEB 600/Trave_carroponte-sup	174 175	0.00	176 177	0.31
14 IPE 500/Appoggio-acciaio	170 174	0.01	170 174	0.01

Percentuale di sfruttamento dei profilati metallici

Distribuzione degli elementi (n. di elementi in ogni campo)

Sezione Numero	Sezione tipo	Sd/Sr ≤ 33%	Sd/Sr ≤ 66%	Sd/Sr ≤ 100%	Sd/Sr ≤ 1000%	Sd/Sr ≤ 1004%	Sd/Sr ≤ 1005%	Sd/Sr ≤ 1006%
2	HEB 300/Baraccatura	100.00 (72)	0.00 (0)	0.00 (0)	0.00 (0)	0.00 (0)	0.00 (0)	0.00 (0)
3	HEB 200/Appoggio setto	100.00 (2)	0.00 (0)	0.00 (0)	0.00 (0)	0.00 (0)	0.00 (0)	0.00 (0)
2	HEA 500/Carroponte inf.	100.00 (4)	0.00 (0)	0.00 (0)	0.00 (0)	0.00 (0)	0.00 (0)	0.00 (0)
6	Tubi Ret H 120x80x6.3/Baraccatura	92.94 (79)	7.06 (6)	0.00 (0)	0.00 (0)	0.00 (0)	0.00 (0)	0.00 (0)
9	HEB 600/Trave_carroponte-sup	100.00 (7)	0.00 (0)	0.00 (0)	0.00 (0)	0.00 (0)	0.00 (0)	0.00 (0)
14	IPE 500/Appoggio-acciaio	100.00 (1)	0.00 (0)	0.00 (0)	0.00 (0)	0.00 (0)	0.00 (0)	0.00 (0)

Elementi maggiormente sollecitati

Elementi Pilastro

Sezione	Min Elemento nodi	Min S_D/S_R	Max Elemento nodi	Max S_D/S_R
2 HEB 300/Baraccatura	123 144	0.01	40 86	0.22
3 HEB 200/Appoggio setto	170 193	0.09	110 170	0.10

Elementi Trave

Sezione	Min Elemento nodi	Min S_D/S_R	Max Elemento nodi	Max S_D/S_R
2 HEA 500/Carroponte inf.	29 30	0.03	25 26	0.29
6 Tubi Ret H 120x80x6.3/Baraccatura	76 77	0.02	132 149	0.38
9 HEB 600/Trave_carroponte-sup	174 175	0.00	176 177	0.31
14 IPE 500/Appoggio-acciaio	170 174	0.01	170 174	0.01

3.4.2 Verifiche pilastro dal nodo 40 al nodo 86 / sez. 2 heb 300 (baraccatura)

DATI GENERALI

Luce dell'asta	3.25	[m]
Sezione numero	2	HEB 300 (Baraccatura)
$\beta_{1\text{-}2/x\text{-}x}$	1.00	
$\beta_{1\text{-}3/y\text{-}y}$	1.00	

Materiale *Acciaio*

f_y	2750.0	[kg/cm²]
f_u	4300.0	[kg/cm²]
ε	0.92	

Coefficienti di sicurezza:

γ_{Mo}	1.10
γ_{M1}	1.10
γ_{M2}	1.25

DATI INERZIALI PROFILO : *HEB 300*

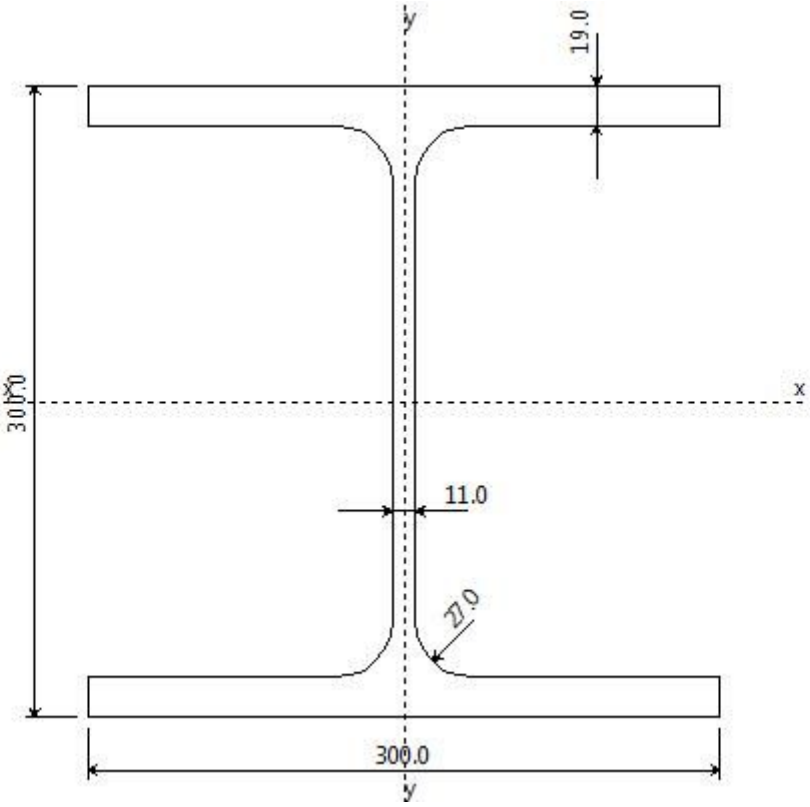

Area	149.34 [cm²]	A.Traz	149.34 [cm²] (L collegamento 0 [mm])
Jx	25204 [cm^4]	ix	12.99 [cm]
Wx	1680 [cm³]	Zx	1872 [cm³]
Jy	8564 [cm^4]	iy	7.57 [cm]
Wy	571 [cm³]	Zy	871 [cm³]
Jt	185 [cm^4]		
Cw	1687792 [cm^6]		
Curva di instabilità piano 1-2 (x-x)	**b**		
Curva di instabilità piano 1-3 (y-y)	**c**		

Doppio T

B	300	[mm]
H	300	[mm]
tf	19	[mm]
tw	11	[mm]
r	27	[mm]

Classificazione generale della sezione:

- Compressione : **1**
- Flessione Mx : **1**
- Flessione My : **1**

VERIFICA DI RESISTENZA

Sezione in classe	1	
$Area_{Eff}$	149.34	[cm²]
Wx_{Eff}	1872	[cm³]
Wy_{Eff}	871	[cm³]
Combinazione critica	4	
Ascissa	0.00	[m]
N_D	1823.4 [kg]	N_D/N_R=0.00
$M_{x,D}$	193.0 [kgm]	$M_{x,D}/M_{x,R}$=0.00
$M_{y,D}$	-4792.2 [kgm]	$M_{y,D}/M_{y,R}$=0.22
S_D/S_R	0.22	**VERIFICATA**

3.4.3 Verifiche pilastro dal nodo 110 al nodo 170 / sez. 3 heb 200 (appoggio setto)

DATI GENERALI

Luce dell'asta	5.00	[m]
Sezione numero	3	HEB 200 (Appoggio setto)
$\beta_{1\text{-}2/x\text{-}x}$	1.00	
$\beta_{1\text{-}3/y\text{-}y}$	1.00	

Materiale *Acciaio*

f_y	2750.0	[kg/cm²]
f_u	4300.0	[kg/cm²]
ε	0.92	

Coefficienti di sicurezza:

γ_{Mo}	1.10
γ_{M1}	1.10
γ_{M2}	1.25

DATI INERZIALI PROFILO : *HEB 200*

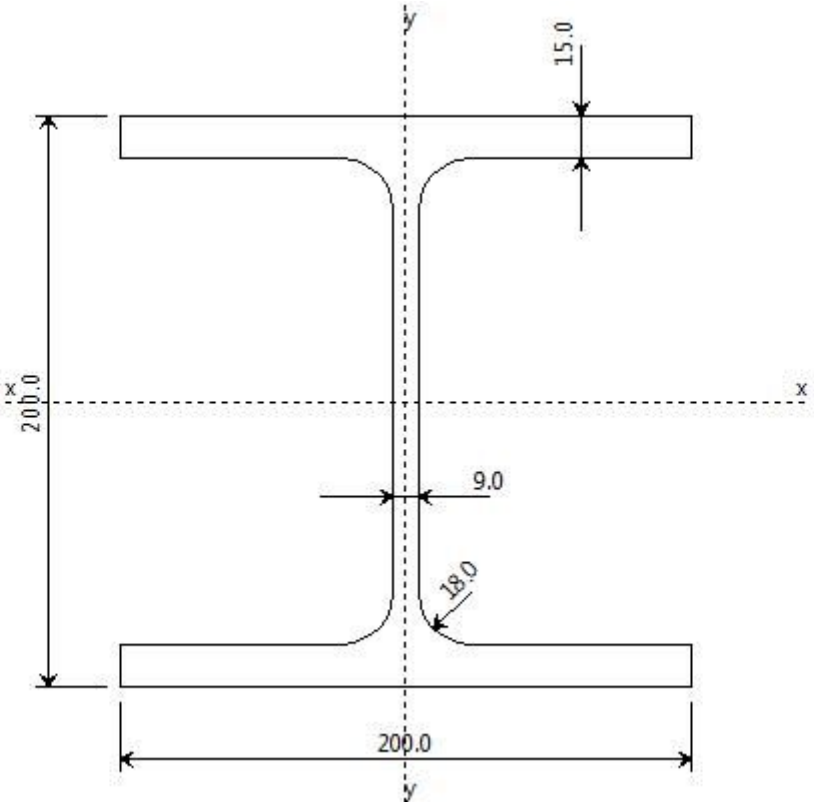

Area	78.20 [cm²]	A.Traz	78.20 [cm²] (L collegamento 0 [mm])
Jx	5703 [cm^4]	ix	8.54 [cm]
Wx	570 [cm³]	Zx	643 [cm³]
Jy	2004 [cm^4]	iy	5.06 [cm]
Wy	200 [cm³]	Zy	306 [cm³]
Jt	59 [cm^4]		
Cw	171125 [cm^6]		
Curva di instabilità piano 1-2 (x-x)	**b**		
Curva di instabilità piano 1-3 (y-y)	**c**		

Doppio T

B	200	[mm]
H	200	[mm]
tf	15	[mm]
tw	9	[mm]
r	18	[mm]

Classificazione generale della sezione:

- Compressione : **1**
- Flessione Mx : **1**
- Flessione My : **1**

VERIFICA DI RESISTENZA

Sezione in classe	1	
$Area_{Eff}$	78.20	[cm²]
Wx_{Eff}	643	[cm³]
Wy_{Eff}	306	[cm³]
Combinazione critica	3	
Ascissa	0.00	[m]
N_D	19492.3 [kg]	N_D/N_R=0.10
$M_{x,D}$	-0.0 [kgm]	$M_{x,D}/M_{x,R}$=0.00
$M_{y,D}$	0.0 [kgm]	$M_{y,D}/M_{y,R}$=0.00
S_D/S_R	0.10	**VERIFICATA**

3.4.4 Verifiche trave dal nodo 25 al nodo 26 / sez. 2 hea 500 (carroponte inf.)

DATI GENERALI

Luce dell'asta	11.00	[m]
Sezione numero	2	HEA 500 (Carroponte inf.)
$\beta_{1-2/x-x}$	1.00	
$\beta_{1-3/y-y}$	1.00	

Materiale *Acciaio*

f_y	2750.0	[kg/cm²]
f_u	4300.0	[kg/cm²]
ε	0.92	

Coefficienti di sicurezza:

γ_{Mo}	1.10
γ_{M1}	1.10
γ_{M2}	1.25

DATI INERZIALI PROFILO : *HEA 500*

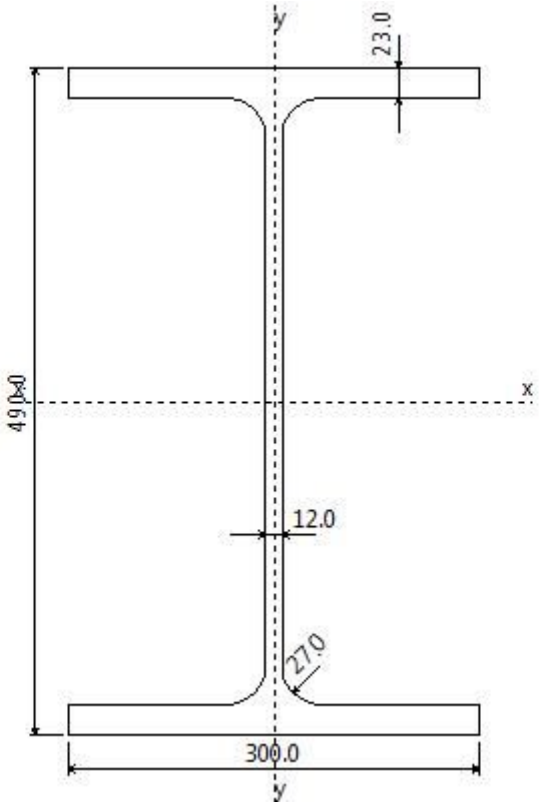

Area	197.80 [cm²]	A.Traz	197.80 [cm²] (L collegamento 0 [mm])
Jx	87092 [cm^4]	ix	20.98 [cm]
Wx	3555 [cm³]	Zx	3954 [cm³]
Jy	10368 [cm^4]	iy	7.24 [cm]
Wy	691 [cm³]	Zy	1059 [cm³]
Jt	309 [cm^4]		
Cw	5643053 [cm^6]		
Curva di instabilità piano 1-2 (x-x)	**a**		
Curva di instabilità piano 1-3 (y-y)	**b**		

Doppio T

B	300	[mm]
H	490	[mm]
tf	23	[mm]
tw	12	[mm]
r	27	[mm]

Classificazione generale della sezione:

- Compressione : **2**
- Flessione Mx : **1**
- Flessione My : **1**

VERIFICA DI RESISTENZA

Sezione in classe	1	
Wx_{Eff}	3954	[cm³]
Wy_{Eff}	1059	[cm³]
Combinazione critica	1	
Ascissa	5.50	[m]
$M_{x,D}$	-28916.8 [kgm]	$M_{x,D}/M_{x,R}$=0.29
$M_{y,D}$	-25.4 [kgm]	$M_{y,D}/M_{y,R}$=0.00
S_D/S_R	0.29	**VERIFICATA**

3.4.5 Verifiche trave dal nodo 132 al nodo 149 / sez. 6 tubi ret h 120x80x6.3 (baraccatura)

DATI GENERALI

Luce dell'asta	2.95	[m]
Sezione numero	6	Tubi Ret H 120x80x6.3 (Baraccatura)
$\beta_{1-2/x-x}$	1.00	
$\beta_{1-3/y-y}$	1.00	

Materiale *Acciaio*

f_y	2750.0	[kg/cm²]
f_u	4300.0	[kg/cm²]
ε	0.92	

Coefficienti di sicurezza:

γ_{Mo}	1.10
γ_{M1}	1.10
γ_{M2}	1.25

DATI INERZIALI PROFILO : *Tubi Ret H 120x80x6.3*

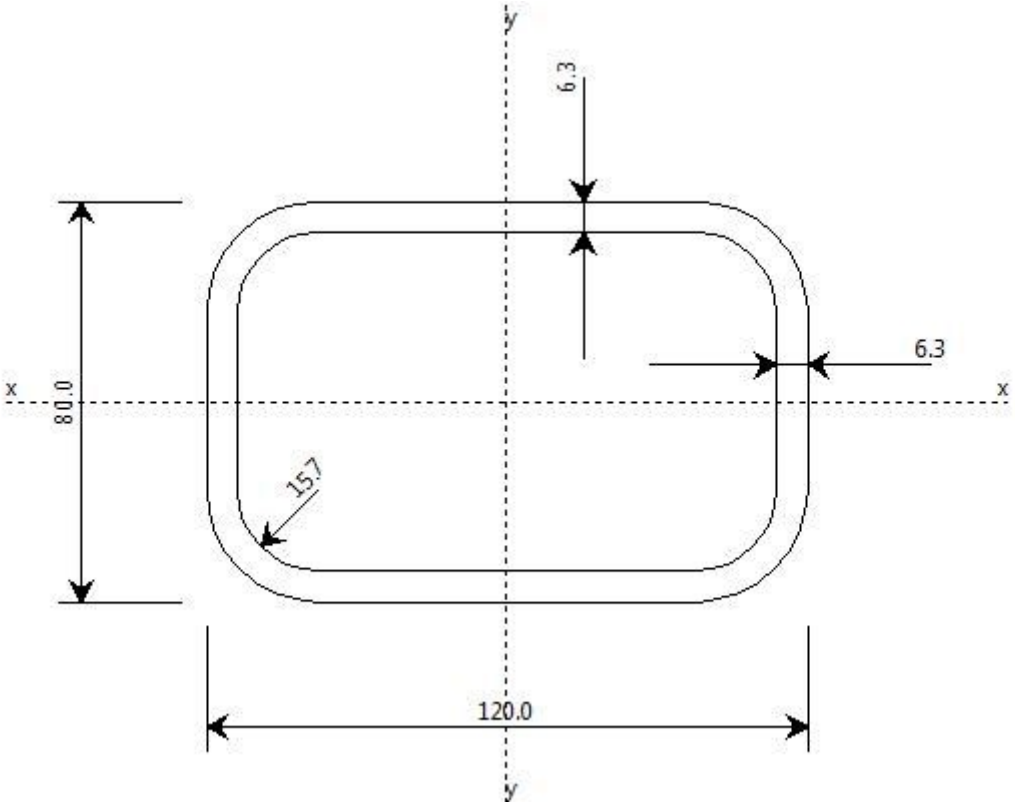

Area	21.53 [cm²]	A.Traz	21.53 [cm²] (L collegamento 0 [mm])
Jx	205 [cm^4]	ix	3.09 [cm]
Wx	51 [cm³]	Zx	62 [cm³]
Jy	381 [cm^4]	iy	4.21 [cm]
Wy	64 [cm³]	Zy	81 [cm³]
Jt	471 [cm^4]		
Cw	129 [cm^6]		
Curva di instabilità piano 1-2 (x-x)	**c**		
Curva di instabilità piano 1-3 (y-y)	**c**		

Tubo quadro

B	120	[mm]
H	80	[mm]
tb	6	[mm]
tw	6	[mm]
r	16	[mm]

Classificazione generale della sezione:

- Compressione : **1**
- Flessione Mx : **1**
- Flessione My : **1**

VERIFICA DI RESISTENZA

Sezione in classe	1	
Wx_{Eff}	62	[cm³]
Wy_{Eff}	81	[cm³]
Combinazione critica	4	
Ascissa	0.00	[m]
$M_{x,D}$	8.9 [kgm]	$M_{x,D}/M_{x,R}$=0.01
$M_{y,D}$	751.9 [kgm]	$M_{y,D}/M_{y,R}$=0.37
S_D/S_R	0.38	**VERIFICATA**

3.4.6 Verifiche trave dal nodo 176 al nodo 177 / sez. 9 heb 600 (trave_carroponte-sup)

DATI GENERALI

Luce dell'asta	11.00	[m]
Sezione numero	9	HEB 600 (Trave_carroponte-sup)
$\beta_{1-2/x-x}$	1.00	
$\beta_{1-3/y-y}$	1.00	

Materiale *Acciaio*

f_y	2750.0	[kg/cm²]
f_u	4300.0	[kg/cm²]
ε	0.92	

Coefficienti di sicurezza:

γ_{Mo}	1.10
γ_{M1}	1.10
γ_{M2}	1.25

DATI INERZIALI PROFILO : *HEB 600*

Area	270.22 [cm²]	A.Traz	270.22 [cm²] (L collegamento 0 [mm])
Jx	171218 [cm^4]	ix	25.17 [cm]
Wx	5707 [cm³]	Zx	6432 [cm³]
Jy	13531 [cm^4]	iy	7.08 [cm]
Wy	902 [cm³]	Zy	1392 [cm³]
Jt	667 [cm^4]		
Cw	10965375 [cm^6]		

Curva di instabilità piano 1-2 (x-x)	**a**	
Curva di instabilità piano 1-3 (y-y)	**b**	

B	300	[mm]
H	600	[mm]
tf	30	[mm]
tw	16	[mm]
r	27	[mm]

Classificazione generale della sezione:

- Compressione : **2**
- Flessione Mx : **1**
- Flessione My : **1**

VERIFICA DI RESISTENZA

Sezione in classe	1	
Wx_{Eff}	6432	[cm³]
Wy_{Eff}	1392	[cm³]
Combinazione critica	1	
Ascissa	5.50	[m]
$M_{x,D}$	-48750.4 [kgm]	$M_{x,D}/M_{x,R}$=0.30
$M_{y,D}$	-131.0 [kgm]	$M_{y,D}/M_{y,R}$=0.00
S_D/S_R	0.31	**VERIFICATA**

3.4.7 Verifiche trave dal nodo 170 al nodo 174 / sez. 14 ipe 500 (appoggio-acciaio)

DATI GENERALI

Luce dell'asta	0.50	[m]
Sezione numero	14	IPE 500 (Appoggio-acciaio)
$\beta_{1\text{-}2/x\text{-}x}$	1.00	
$\beta_{1\text{-}3/y\text{-}y}$	1.00	

Materiale *Acciaio*

f_y	2750.0	[kg/cm²]
f_u	4300.0	[kg/cm²]
ε	0.92	

Coefficienti di sicurezza:

γ_{Mo}	1.10
γ_{M1}	1.10
γ_{M2}	1.25

DATI INERZIALI PROFILO : *IPE 500*

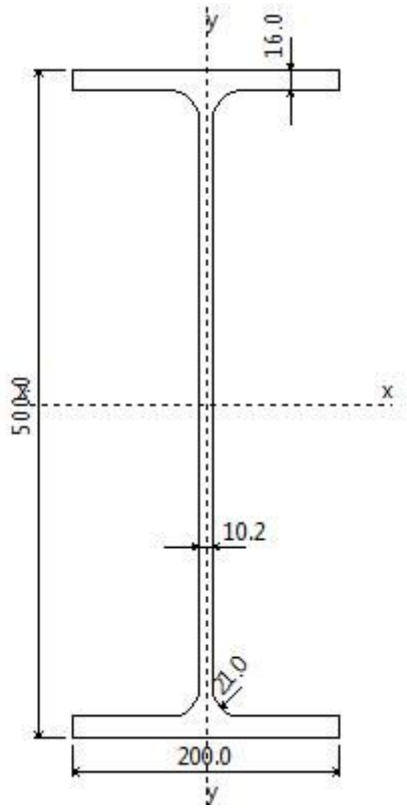

Area	115.68 [cm²]	A.Traz	115.68 [cm²] (L collegamento 0 [mm])
Jx	48279 [cm^4]	ix	20.43 [cm]
Wx	1931 [cm³]	Zx	2198 [cm³]
Jy	2142 [cm^4]	iy	4.30 [cm]
Wy	214 [cm³]	Zy	336 [cm³]
Jt	89 [cm^4]		
Cw	1249365 [cm^6]		
Curva di instabilità piano 1-2 (x-x)	**a**		
Curva di instabilità piano 1-3 (y-y)	**b**		

Doppio T

B	200	[mm]
H	500	[mm]
tf	16	[mm]
tw	10	[mm]
r	21	[mm]

Classificazione generale della sezione:

- Compressione : **4**
- Flessione Mx : **1**
- Flessione My : **1**

Sezione in Classe 4. Caratteristiche inerziali EFFICACI a *Compressione*:

Iniziale Classe 4

Area	115.68	111.21	[cm²]
Jx	48279	48272	[cm^4]
Wx^{y+}	1931	1931	[cm³]
Wx^{y-}	1931	1931	[cm³]
ix	20.43	20.83	[cm]
Jy	2142	2142	[cm^4]
Wy^{x-}	214	214	[cm³]
Wy^{x+}	214	214	[cm³]
iy	4.30	4.39	[cm]
fxG	10.00	10.00	[cm]
fyG	25.00	25.00	[cm]

Classificazione dei pannelli componenti la sezione:

Tipo	xi [mm]	yi [mm]	xj [mm]	yj [mm]	L [mm]	t [mm]	L/t	Classe	Psi	Ks	Lambda	Ro	Linv [mm]
Flange	100	492	200	492	74	16	4.62	1					
Flange	100	8	200	8	74	16	4.62	1					
Flange	100	492	0	492	74	16	4.62	1					
Flange	100	8	0	8	74	16	4.62	1					
Web	100	8	100	492	426	10	41.76	4	1.00	4.00	0.795	0.909	39

VERIFICA DI RESISTENZA

Sezione in classe	1	
Wx_{Eff}	2198	[cm³]
Wy_{Eff}	336	[cm³]
Combinazione critica	4	
Ascissa	0.50	[m]
$M_{x,D}$	-3.9 [kgm]	$M_{x,D}/M_{x,R}$=0.00
$M_{y,D}$	-116.6 [kgm]	$M_{y,D}/M_{y,R}$=0.01
S_D/S_R	0.01	**VERIFICATA**

3.5 Verifiche elementi cabina gruista e scala esterna

3.5.1 verifiche pilastro dal nodo 30 al nodo 32 / sez. 6 heb 120 (pilastro-scale)

DATI GENERALI
Luce dell'asta 0.20 [m]
Sezione numero 6 Sez. 6 HEB 120 (Pilastro-scale)
$K_{1-2/x-x}$ 1.00
$K_{1-3/y-y}$ 1.00
Materiale *Acciaio*
F_y 2750.0 [kg/cm²]
F_u 4300.0 [kg/cm²]
Coefficienti di sicurezza:
$\varphi_{t,Fy}$ 0.90
$\varphi_{t,Fu}$ 0.70
φ_c 0.90
φ_b 0.90
φ_v 0.90

DATI INERZIALI PROFILO : *HEB 120*

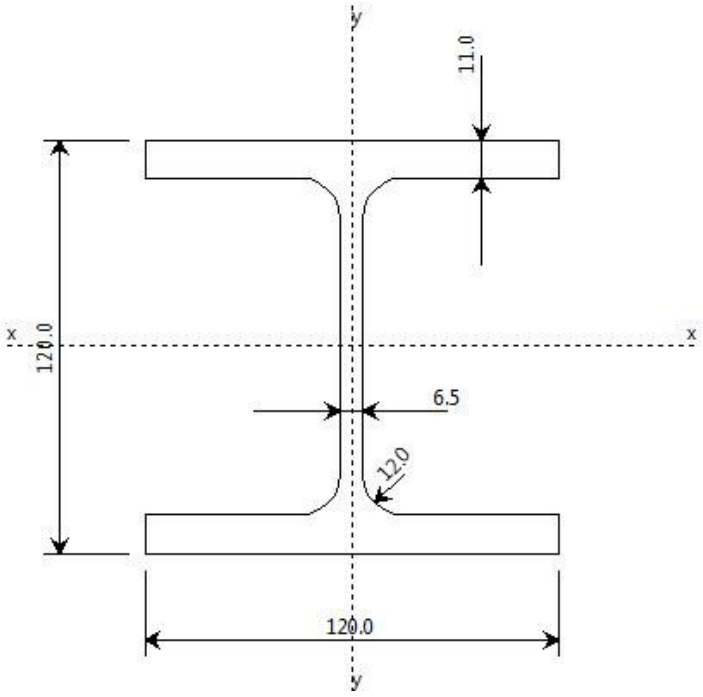

Area	34.06 [cm²]	A.Traz	34.06 [cm²] (L collegamento 0 [mm])
Jx	865 [cm^4]	ix	5.04 [cm]
Wx	144 [cm³]	Zx	165 [cm³]
Jy	318 [cm^4]	iy	3.05 [cm]
Wy	53 [cm³]	Zy	81 [cm³]
Jt	14 [cm^4]		
Cw	9410 [cm^6]		

Curva di instabilità piano 1-2 (x-x) **b**
Curva di instabilità piano 1-3 (y-y) **c**

Doppio T
B 120 [mm]
H 120 [mm]
tf 11 [mm]
tw 7 [mm]
r 12 [mm]

Classificazione generale della sezione:
Classe Compressione Compact
Classe Flessione Mx Compact
Classe Flessione My Compact

VERIFICA DI RESISTENZA
Combinazione critica 1

Ascissa	0.20	[m]
N_D	2656.5 [kg]	N_D/N_R= 0.03
$M_{x,D}$	-1058.0 [kgm]	$M_{x,D}/M_{x,R}$= 0.26
$M_{y,D}$	-137.9 [kgm]	$M_{y,D}/M_{y,R}$= 0.07
S_D/S_R	0.34	VERIFICATA

VERIFICA DI INSTABILITA DA SFORZO NORMALE
Verifica di Instabilità nel Piano 1/2 / *Profilo Singolo*

Luce	0.20	[m]
K	1.00	
Snellezza	3.97	
P_{Cr}	44841312.7	[kg]
$Luce_{LT}$	0.20	[m]
K_{LT}	1.00	
$Snellezza_{LT}$	1.00	
Fe_{Cr}	421373.7	[kg/cm²]

Combinazione critica 1

N_D	1157.5 [kg]	[kg]
S_D/S_R	0.03	VERIFICATA

Verifica di Instabilità nel Piano 1/3 / *Profilo Singolo*

Luce	0.20	[m]
K	1.00	
Snellezza	6.55	
P_{Cr}	16454418.7	[kg]
$Luce_{LT}$	0.20	[m]
K_{LT}	1.00	
$Snellezza_{LT}$	1.00	
Fe_{Cr}	421373.7	[kg/cm²]

Combinazione critica 1

N_D	1157.5 [kg]	[kg]
S_D/S_R	0.03	VERIFICATA

3.5.2 verifiche pilastro dal nodo 2 al nodo 36 / sez. 5 hea 200 (pilastro-gruista)

DATI GENERALI
Luce dell'asta 3.00 [m]
Sezione numero 5 Sez. 5 HEA 200 (Pilastro-gruista)
$K_{1-2/x-x}$ 1.00
$K_{1-3/y-y}$ 1.00
Materiale *Acciaio*
F_y 2750.0 [kg/cm²]
F_u 4300.0 [kg/cm²]
Coefficienti di sicurezza:
$\varphi_{t,Fy}$ 0.90
$\varphi_{t,Fu}$ 0.70
φ_c 0.90
φ_b 0.90
φ_v 0.90

DATI INERZIALI PROFILO : *HEA 200*

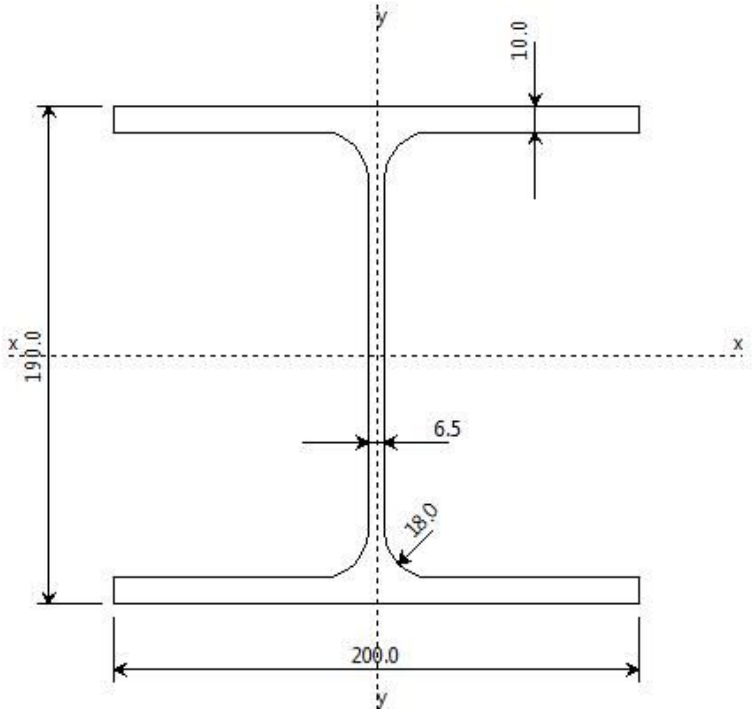

Area	53.95 [cm²]	A.Traz	53.95 [cm²] (L collegamento 0 [mm])
Jx	3699 [cm^4]	ix	8.28 [cm]
Wx	389 [cm³]	Zx	430 [cm³]
Jy	1336 [cm^4]	iy	4.98 [cm]
Wy	134 [cm³]	Zy	204 [cm³]
Jt	21 [cm^4]		
Cw	108000 [cm^6]		

Curva di instabilità piano 1-2 (x-x) **b**
Curva di instabilità piano 1-3 (y-y) **c**

Doppio T
B 200 [mm]
H 190 [mm]
tf 10 [mm]
tw 7 [mm]
r 18 [mm]

Classificazione generale della sezione:
Classe Compressione Compact
Classe Flessione Mx Compact
Classe Flessione My Compact

VERIFICA DI RESISTENZA
Combinazione critica 2

Ascissa	0.00	[m]
N_D	2185.9 [kg]	N_D/N_R= 0.02
$M_{x,D}$	-966.3 [kgm]	$M_{x,D}/M_{x,R}$= 0.09
$M_{y,D}$	-428.7 [kgm]	$M_{y,D}/M_{y,R}$= 0.08
$V_{y,D}$	-890.8 [kgm]	$V_{y,D}/V_{y,R}$= 0.05
S_D/S_R	0.18	VERIFICATA

VERIFICA DI INSTABILITA DA SFORZO NORMALE
Verifica di Instabilità nel Piano 1/2 / *Profilo Singolo*

Luce	3.00	[m]
K	1.00	
Snellezza	36.23	
P_{Cr}	851918.8	[kg]
$Luce_{LT}$	3.00	[m]
K_{LT}	1.00	
$Snellezza_{LT}$	1.00	
Fe_{Cr}	8221.9	[kg/cm²]

Combinazione critica 1

N_D	1615.7 [kg]	[kg]
S_D/S_R	0.02	VERIFICATA

Verifica di Instabilità nel Piano 1/3 / *Profilo Singolo*

Luce	3.00	[m]
K	1.00	
Snellezza	60.29	
P_{Cr}	307589.2	[kg]
$Luce_{LT}$	3.00	[m]
K_{LT}	1.00	
$Snellezza_{LT}$	1.00	
Fe_{Cr}	8221.9	[kg/cm²]

Combinazione critica 1

N_D	1615.7 [kg]	[kg]
S_D/S_R	0.02	VERIFICATA

3.5.3 verifiche trave dal nodo 1 al nodo 28 / sez. 17 upn 140 (cosciale-scale)

DATI GENERALI
Luce dell'asta 2.28 [m]
Sezione numero 17 Sez. 17 UPN 140 (Cosciale-scale)
$K_{1-2/x-x}$ 1.00
$K_{1-3/y-y}$ 1.00
Materiale *Acciaio*
F_y 2750.0 [kg/cm²]
F_u 4300.0 [kg/cm²]
Coefficienti di sicurezza:
$\varphi_{t,Fy}$ 0.90
$\varphi_{t,Fu}$ 0.70
φ_c 0.90
φ_b 0.90
φ_v 0.90

DATI INERZIALI PROFILO : *UPN 140*

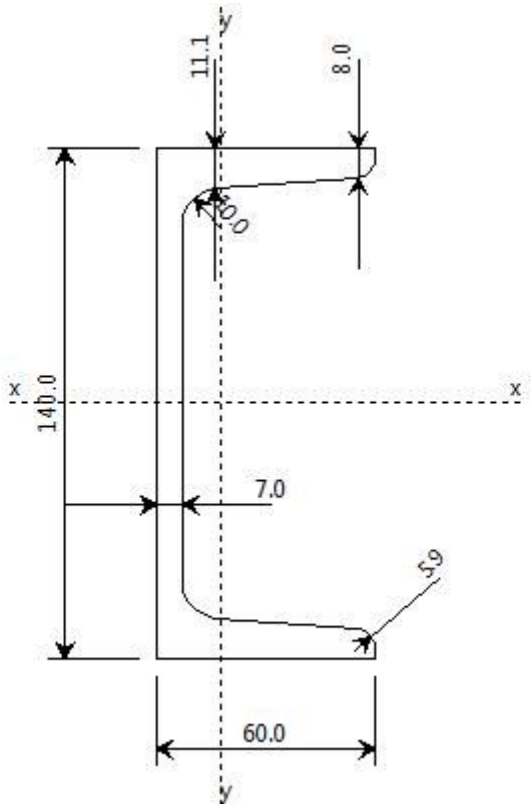

Area	20.38 [cm²]	A.Traz	20.38 [cm²] (L collegamento 0 [mm])
Jx	605 [cm^4]	ix	5.45 [cm]
Wx	86 [cm³]	Zx	103 [cm³]
Jy	62 [cm^4]	iy	1.75 [cm]
Wy	15 [cm³]	Zy	28 [cm³]
Jt	5 [cm^4]		

Cw	1926 [cm^6]	
Curva di instabilità piano 1-2 (x-x)	**b**	
Curva di instabilità piano 1-3 (y-y)	**b**	

C o UPN

B	60	[mm]
H	140	[mm]
tf max	12	[mm]
tf min	8	[mm]
tw	7	[mm]
r	10	[mm]
r smusso	5	[mm]

Classificazione generale della sezione:

Classe Compressione	Compact
Classe Flessione Mx	Compact
Classe Flessione My	Compact

VERIFICA DI RESISTENZA

Combinazione critica	1	
Ascissa	0.00	[m]
$M_{x,D}$	-1.4 [kgm]	$M_{x,D}/M_{x,R}$= 0.00
$M_{y,D}$	184.5 [kgm]	$M_{y,D}/M_{y,R}$= 0.32
S_D/S_R	0.32	VERIFICATA

3.5.4 verifiche trave dal nodo 43 al nodo 44 / sez. 15 heb 140 (trave-gruista)

DATI GENERALI

Luce dell'asta 3.50 [m]

Sezione numero 15 Sez. 15 HEB 140 (Trave-gruista)

$K_{1-2/x-x}$ 1.00

$K_{1-3/y-y}$ 1.00

Materiale *Acciaio*

F_y 2750.0 [kg/cm²]

F_u 4300.0 [kg/cm²]

Coefficienti di sicurezza:

$\varphi_{t,Fy}$ 0.90

$\varphi_{t,Fu}$ 0.70

φ_c 0.90

φ_b 0.90

φ_v 0.90

DATI INERZIALI PROFILO : *HEB 140*

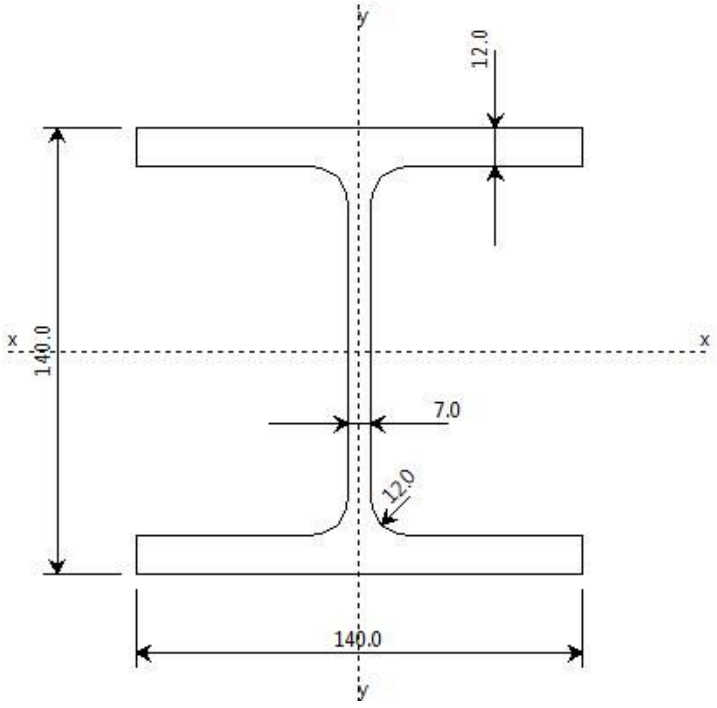

Area	43.01 [cm²]	A.Traz	43.01 [cm²] (L collegamento 0 [mm])
Jx	1511 [cm^4]	ix	5.93 [cm]
Wx	216 [cm³]	Zx	246 [cm³]
Jy	550 [cm^4]	iy	3.58 [cm]
Wy	79 [cm³]	Zy	120 [cm³]
Jt	20 [cm^4]		
Cw	22479 [cm^6]		

Curva di instabilità piano 1-2 (x-x) **b**

Curva di instabilità piano 1-3 (y-y) **c**

Doppio T
B 140 [mm]
H 140 [mm]
tf 12 [mm]
tw 7 [mm]
r 12 [mm]

Classificazione generale della sezione:
Classe Compressione Compact
Classe Flessione Mx Compact
Classe Flessione My Compact

VERIFICA DI RESISTENZA
Combinazione critica 1

Ascissa	0.00	[m]
$M_{x,D}$	1157.1 [kgm]	$M_{x,D}/M_{x,R}$= 0.19
$M_{y,D}$	76.4 [kgm]	$M_{y,D}/M_{y,R}$= 0.03
$V_{y,D}$	1729.6 [kgm]	$V_{y,D}/V_{y,R}$= 0.12
S_D/S_R	0.12	VERIFICATA

3.5.5 verifiche trave dal nodo 47 al nodo 52 / sez. 16 tubi quadri 100x5.6 (arcareccio-gruista)

DATI GENERALI
Luce dell'asta 2.50 [m]
Sezione numero 16 Sez. 16 Tubi Quadri 100x5.6 (Arcareccio-gruista)
$K_{1-2/x-x}$ 1.00
$K_{1-3/y-y}$ 1.00
Materiale *Acciaio*
F_y 2750.0 [kg/cm²]
F_u 4300.0 [kg/cm²]
Coefficienti di sicurezza:
$\varphi_{t,Fy}$ 0.90
$\varphi_{t,Fu}$ 0.70
φ_c 0.90
φ_b 0.90
φ_v 0.90

DATI INERZIALI PROFILO : *Tubi Quadri 100x5.6*

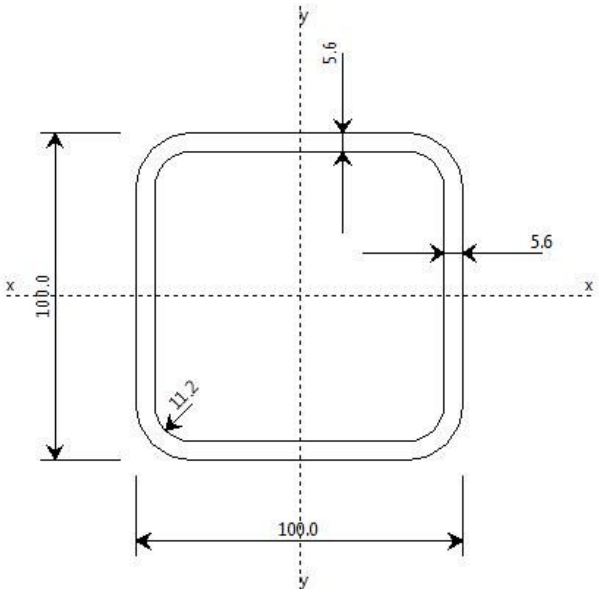

Area	19.77 [cm²]	A.Traz	19.77 [cm²] (L collegamento 0 [mm])
Jx	281 [cm^4]	ix	3.77 [cm]
Wx	56 [cm³]	Zx	68 [cm³]
Jy	281 [cm^4]	iy	3.77 [cm]
Wy	56 [cm³]	Zy	68 [cm³]
Jt	481 [cm^4]		
Cw	4 [cm^6]		

Curva di instabilità piano 1-2 (x-x) **a**
Curva di instabilità piano 1-3 (y-y) **a**

Tubo quadro
B 100 [mm]

H 100 [mm]
tb 6 [mm]
tw 6 [mm]
r 11 [mm]

Classificazione generale della sezione:
Classe Compressione Compact
Classe Flessione Mx Compact
Classe Flessione My Compact

VERIFICA DI RESISTENZA
Combinazione critica 6

Ascissa	0.00	[m]
$M_{x,D}$	0.1 [kgm]	$M_{x,D}/M_{x,R}$= 0.00
$M_{y,D}$	-58.0 [kgm]	$M_{y,D}/M_{y,R}$= 0.03
S_D/S_R	0.03	VERIFICATA

3.6 Verifiche muro di contenimento.

Modalità di verifica

Le pareti in c.a. vengono verificate come setti/diaframmi o nuclei.

La verifica dei setti/diaframmi viene condotta a pressoflessione retta e a taglio. Viene calcolato lo sforzo normale medio agente sul setto e il momento ad esso associato. Quando previsto, sono introdotti ferri verticali aggiuntivi da disporsi sulle estremità del setto stesso.

La verifica dei nuclei viene condotta a pressoflessione deviata sulla sezione complessiva e a taglio sulle singole pareti costituenti il nucleo.

Sezioni Impiegate:

Sez. Num.	Info	Dimensioni	Criterio	Calcestruzzo	f_{ck} [kg/cm²]	f_{cd} [kg/cm²]	σ_{RARE} [kg/cm²]	σ_{FREQ} [kg/cm²]	σ_{QP} [kg/cm²]	Acciaio	f_{yk} [kg/cm²]	f_{yd} [kg/cm²]	σ_{yRARE} [kg/cm²]	σ_{yFREQ} [kg/cm²]	σ_{yQP} [kg/cm²]	Coprifero [cm]
1	Muro Muro contenimento	s 20 [cm]	Verset	C25/30	250.0	141.7	150.0	250.0	112.5	B 450 C	4500.0	3913.0	3600.0	4500.0	4500.0	3.00

Taglio di progetto pari al taglio di calcolo

EC2. 4.3.2.4.4. Verifica a taglio con il metodo dell'inclinazione variabile del traliccio. cotg θ = 1.00

Verifiche Setti:

Setto : 1 14 15 2 / Sezione 1

B = 50.00 H = 50.00 [m]

Armature su ogni faccia: Verticali : ø 8 25' [cm], Orizzontali : ø 8 25' [cm], Integrative Dx: ø 14 25' [cm]

Sezione	Comb.	N_{Ed} [kg]	M_{12} [kgm]	M_{13} [kgm]	Sd/Sr
Base	1	-121.7	0.0	27.4	0.00
Sommità	2	42.7	0.0	28.8	0.01

S.L.E.	Combinazione	N [kg]	M_{12} [kgm]	M_{13} [kgm]	σ [kg/cm²]
Base					
$\sigma_{Cls,Max}$	15	-92.3	0.0	20.8	-0.4
$\sigma_{Cls,Med}$	15	-92.3	0.0	20.8	-0.2
$\sigma_{s,t}$	15	-92.3	0.0	20.8	4.0
$\sigma_{s,c}$	15	-92.3	0.0	20.8	-4.6
Sommita					
$\sigma_{Cls,Max}$	20	32.1	0.0	21.5	-0.3
$\sigma_{Cls,Med}$	10	31.9	0.0	21.4	0.0
$\sigma_{s,t}$	20	32.1	0.0	21.5	19.0
$\sigma_{s,c}$	20	32.1	0.0	21.5	-3.2

Verifiche a Taglio

Nodi	Comb.	V_d [kg]	α	V_{Ed} [kg]	N_{Ed} [kg]	M_{Ed} [kg]	V_{Rcd} [kg]	V_{Rsd} [kg]	$V_{Rd,scorrimento}$ [kg]	V_S/V_R
1 15	2	-111.6	1.00	-111.6	-119.8	27.0	29969.6	6656.0	8880.1	0.02

Setto : 14 23 24 15 / Sezione 1

B = 50.00 H = 50.00 [m]

Armature su ogni faccia: Verticali : ø 8 25' [cm], Orizzontali : ø 8 25' [cm], Integrative Dx: ø 14 25' [cm]

Sezione	Comb.	N_{Ed} [kg]	M_{12} [kgm]	M_{13} [kgm]	Sd/Sr
Base	2	-122.6	0.0	8.5	0.00
Sommità	1	43.7	0.0	14.7	0.00

S.L.E.	Combinazione	N [kg]	M_{12} [kgm]	M_{13} [kgm]	σ [kg/cm²]
Base					
$\sigma_{Cls,Max}$	20	-92.8	0.0	6.4	-0.1
$\sigma_{Cls,Med}$	20	-92.8	0.0	6.4	-0.1
$\sigma_{s,t}$	20	-92.8	0.0	6.4	-0.5
$\sigma_{s,c}$	20	-92.8	0.0	6.4	-2.0
Sommita					
$\sigma_{Cls,Max}$	16	29.6	0.0	11.0	-0.2

$\sigma_{Cls,Med}$	10	32.5	0.0	11.2	0.0	
$\sigma_{s,t}$	15	30.5	0.0	11.0	11.6	
$\sigma_{s,c}$	20	32.2	0.0	11.3	-1.2	

Verifiche a Taglio

Nodi	Comb.	V_d [kg]	α	V_{Ed} [kg]	N_{Ed} [kg]	M_{Ed} [kg]	V_{Rcd} [kg]	V_{Rsd} [kg]	$V_{Rd,scorrimento}$ [kg]	V_S/V_R
14 24	2	-46.1	1.00	-46.1	-122.6	8.5	29969.6	6656.0	8880.1	0.01

Setto : 2 15 16 3 / Sezione 1

B = 50.00 H = 50.00 [m]

Armature su ogni faccia: Verticali : ø 8 25' [cm], Orizzontali : ø 8 25' [cm], Integrative Dx: ø 14 25' [cm]

Sezione	Comb.	N_{Ed} [kg]	M_{12} [kgm]	M_{13} [kgm]	Sd/Sr
Base	1	-207.6	0.0	93.6	0.01
Sommità	5	-20.4	0.0	80.2	0.01

S.L.E.	Combinazione	N [kg]	M_{12} [kgm]	M_{13} [kgm]	σ [kg/cm²]
Base					
$\sigma_{Cls,Max}$	15	-135.9	0.0	67.9	-1.2
$\sigma_{Cls,Med}$	15	-135.9	0.0	67.9	-0.6
$\sigma_{s,t}$	20	-150.2	0.0	70.2	29.6
$\sigma_{s,c}$	15	-135.9	0.0	67.9	-14.1
Sommita					
$\sigma_{Cls,Max}$	15	-10.9	0.0	61.3	-1.1
$\sigma_{Cls,Med}$	15	-10.9	0.0	61.3	-0.5
$\sigma_{s,t}$	20	-25.2	0.0	62.8	39.9
$\sigma_{s,c}$	15	-10.9	0.0	61.3	-11.2

Verifiche a Taglio

Nodi	Comb.	V_d [kg]	α	V_{Ed} [kg]	N_{Ed} [kg]	M_{Ed} [kg]	V_{Rcd} [kg]	V_{Rsd} [kg]	$V_{Rd,scorrimento}$ [kg]	V_S/V_R
2 16	1	-354.5	1.00	-354.5	-207.6	93.6	29969.5	6656.0	8880.1	0.05

Setto : 15 24 25 16 / Sezione 1

B = 50.00 H = 50.00 [m]

Armature su ogni faccia: Verticali : ø 8 25' [cm], Orizzontali : ø 8 25' [cm], Integrative Dx: ø 14 25' [cm]

Sezione	Comb.	N_{Ed} [kg]	M_{12} [kgm]	M_{13} [kgm]	Sd/Sr
Base	1	-303.6	0.0	47.1	0.00
Sommità	8	-0.3	0.0	19.4	0.00

S.L.E.	Combinazione	N [kg]	M_{12} [kgm]	M_{13} [kgm]	σ [kg/cm²]
Base					
$\sigma_{Cls,Max}$	15	-176.9	0.0	32.5	-0.6
$\sigma_{Cls,Med}$	15	-176.9	0.0	32.5	-0.3
$\sigma_{s,t}$	20	-209.3	0.0	34.7	3.1
$\sigma_{s,c}$	15	-176.9	0.0	32.5	-7.3
Sommita					
$\sigma_{Cls,Max}$	20	-84.3	0.0	9.8	-0.2
$\sigma_{Cls,Med}$	20	-84.3	0.0	9.8	-0.1
$\sigma_{s,t}$	20	-84.3	0.0	9.8	0.0
$\sigma_{s,c}$	20	-84.3	0.0	9.8	-2.4

Verifiche a Taglio

Nodi	Comb.	V_d [kg]	α	V_{Ed} [kg]	N_{Ed} [kg]	M_{Ed} [kg]	V_{Rcd} [kg]	V_{Rsd} [kg]	$V_{Rd,scorrimento}$ [kg]	V_S/V_R
15 25 5		-119.1	1.00	-119.1	-242.7	43.2	29969.5	6656.0	8880.1	0.02

Setto : 3 16 17 4 / Sezione 1

B = 80.00 H = 50.00 [m]

Armature su ogni faccia: Verticali : ø 8 25' [cm], Orizzontali : ø 8 25' [cm], Integrative Sx: ø 14 25' [cm], Dx: ø 14 25' [cm]

Sezione	Comb.	N_{Ed} [kg]	M_{12} [kgm]	M_{13} [kgm]	Sd/Sr
Base	1	-229.4	0.0	364.8	0.02
Sommità	1	30.6	0.0	437.2	0.02

S.L.E.	Combinazione	N [kg]	M_{12} [kgm]	M_{13} [kgm]	σ [kg/cm²]
Base					
$\sigma_{Cls,Max}$	15	-145.4	0.0	246.6	-1.7
$\sigma_{Cls,Med}$	15	-145.4	0.0	246.6	-0.9
$\sigma_{s,t}$	15	-145.4	0.0	246.6	56.9
$\sigma_{s,c}$	15	-145.4	0.0	246.6	-21.9
Sommita					
$\sigma_{Cls,Max}$	15	54.6	0.0	297.8	-2.0
$\sigma_{Cls,Med}$	10	34.0	0.0	323.0	0.0
$\sigma_{s,t}$	15	54.6	0.0	297.8	85.9
$\sigma_{s,c}$	15	54.6	0.0	297.8	-25.1

Verifiche a Taglio

Nodi	Comb.	V_d [kg]	α	V_{Ed} [kg]	N_{Ed} [kg]	M_{Ed} [kg]	V_{Rcd} [kg]	V_{Rsd} [kg]	$V_{Rd,scorrimento}$ [kg]	V_S/V_R
3 17	1	-1604.0	1.00	-1604.0	-229.4	364.8	49099.0	10904.4	16008.4	0.15

Setto : 16 25 28 17 / Sezione 1

B = 80.00 H = 50.00 [m]

Armature su ogni faccia: Verticali : ø 8 25' [cm], Orizzontali : ø 8 25' [cm], Integrative Sx: ø 14 25' [cm], Dx: ø 14 25' [cm]

Sezione	Comb.	N_{Ed} [kg]	M_{12} [kgm]	M_{13} [kgm]	Sd/Sr
Base	1	-665.7	0.0	149.2	0.00
Sommità	1	-405.7	0.0	205.7	0.01

S.L.E.	Combinazione	N [kg]	M_{12} [kgm]	M_{13} [kgm]	σ [kg/cm²]
Base					
$\sigma_{Cls,Max}$	15	-412.6	0.0	108.7	-0.7
$\sigma_{Cls,Med}$	15	-412.6	0.0	108.7	-0.4
$\sigma_{s,t}$	20	-478.8	0.0	112.7	4.1
$\sigma_{s,c}$	15	-412.6	0.0	108.7	-10.2
Sommita					
$\sigma_{Cls,Max}$	15	-212.6	0.0	123.2	-0.9
$\sigma_{Cls,Med}$	15	-212.6	0.0	123.2	-0.4
$\sigma_{s,t}$	15	-212.6	0.0	123.2	18.7
$\sigma_{s,c}$	15	-212.6	0.0	123.2	-11.4

Verifiche a Taglio

Nodi	Comb.	V_d [kg]	α	V_{Ed} [kg]	N_{Ed} [kg]	M_{Ed} [kg]	V_{Rcd} [kg]	V_{Rsd} [kg]	$V_{Rd,scorrimento}$ [kg]	V_S/V_R
16 28	1	-709.8	1.00	-709.8	-665.7	149.2	49099.0	10904.4	16008.4	0.07

Setto : 4 17 18 5 / Sezione 1

B = 50.00 H = 50.00 [m]

Armature su ogni faccia: Verticali : ø 8 25' [cm], Orizzontali : ø 8 25' [cm], Integrative Dx: ø 14 25' [cm]

Sezione	Comb.	N_{Ed} [kg]	M_{12} [kgm]	M_{13} [kgm]	Sd/Sr
Base	1	460.3	0.0	169.7	0.04

Sommità 1 622.8 0.0 225.6 0.05

S.L.E.	Combinazione	N [kg]	M_{12} [kgm]	M_{13} [kgm]	σ [kg/cm²]
Base					
$\sigma_{Cls,Max}$	15	314.5	0.0	112.4	-1.6
$\sigma_{Cls,Med}$	10	340.4	0.0	124.3	0.0
$\sigma_{s,t}$	15	314.5	0.0	112.4	119.4
$\sigma_{s,c}$	15	314.5	0.0	112.4	-12.4
Sommita					
$\sigma_{Cls,Max}$	15	439.5	0.0	148.2	-2.1
$\sigma_{Cls,Med}$	10	465.4	0.0	164.9	0.0
$\sigma_{s,t}$	15	439.5	0.0	148.2	160.9
$\sigma_{s,c}$	15	439.5	0.0	148.2	-15.6

Verifiche a Taglio

Nodi	Comb.	V_d [kg]	α	V_{Ed} [kg]	N_{Ed} [kg]	M_{Ed} [kg]	V_{Rcd} [kg]	V_{Rsd} [kg]	$V_{Rd,scorrimento}$ [kg]	V_S/V_R
4 18	1	-790.7	1.00	-790.7	460.3	169.7	29969.5	6656.0	8880.1	0.12

Setto : 17 28 29 18 / Sezione 1

B = 50.00 H = 50.00 [m]

Armature su ogni faccia: Verticali : ø 8 25' [cm], Orizzontali : ø 8 25' [cm], Integrative Dx: ø 14 25' [cm]

Sezione	Comb.	N_{Ed} [kg]	M_{12} [kgm]	M_{13} [kgm]	Sd/Sr
Base	1	1430.7	0.0	113.5	0.06
Sommità	1	1593.2	0.0	393.6	0.11

S.L.E.	Combinazione	N [kg]	M_{12} [kgm]	M_{13} [kgm]	σ [kg/cm²]
Base					
$\sigma_{Cls,Max}$	10	1073.9	0.0	82.5	3.2
$\sigma_{Cls,Med}$	10	1073.9	0.0	82.5	0.0
$\sigma_{s,t}$	15	1023.0	0.0	73.4	188.4
$\sigma_{s,c}$	10	1073.9	0.0	82.5	61.2
Sommita					
$\sigma_{Cls,Max}$	15	1148.0	0.0	279.6	-3.5
$\sigma_{Cls,Med}$	10	1198.9	0.0	294.5	0.0
$\sigma_{s,t}$	15	1148.0	0.0	279.6	347.8
$\sigma_{s,c}$	15	1148.0	0.0	279.6	-18.2

Verifiche a Taglio

Nodi	Comb.	V_d [kg]	α	V_{Ed} [kg]	N_{Ed} [kg]	M_{Ed} [kg]	V_{Rcd} [kg]	V_{Rsd} [kg]	$V_{Rd,scorrimento}$ [kg]	V_S/V_R
17 29	1	-1014.1	1.00	-1014.1	1430.7	113.5	29969.5	6656.0	8880.1	0.15

Setto : 5 18 19 8 / Sezione 1

B = 20.00 H = 50.00 [m]

Armature su ogni faccia: Verticali : ø 8 25' [cm], Orizzontali : ø 8 25' [cm], Integrative Dx: ø 14 25' [cm]

Sezione	Comb.	N_{Ed} [kg]	M_{12} [kgm]	M_{13} [kgm]	Sd/Sr
Base	1	327.4	0.0	-15.2	0.02
Sommità	1	392.4	0.0	-14.8	0.02

S.L.E.	Combinazione	N [kg]	M_{12} [kgm]	M_{13} [kgm]	σ [kg/cm²]
Base					
$\sigma_{Cls,Max}$	20	240.9	0.0	-12.2	-1.0
$\sigma_{Cls,Med}$	10	242.3	0.0	-12.1	0.0
$\sigma_{s,t}$	15	224.6	0.0	-12.9	63.2
$\sigma_{s,c}$	16	217.7	0.0	-13.2	14.8
Sommita					
$\sigma_{Cls,Max}$	20	290.9	0.0	-11.8	-0.8
$\sigma_{Cls,Med}$	10	292.3	0.0	-11.6	0.0
$\sigma_{s,t}$	15	274.6	0.0	-12.2	69.2
$\sigma_{s,c}$	16	267.7	0.0	-12.4	19.1

Verifiche a Taglio

Nodi	Comb.	V_d [kg]	α	V_{Ed} [kg]	N_{Ed} [kg]	M_{Ed} [kg]	V_{Rcd} [kg]	V_{Rsd} [kg]	$V_{Rd,scorrimento}$ [kg]	V_S/V_R
5 19	2	63.9	1.00	63.9	297.4	-16.3	10840.1	2407.5	4732.0	0.03

Setto : 18 29 30 19 / Sezione 1

B = 20.00 H = 50.00 [m]

Armature su ogni faccia: Verticali : ø 8 25' [cm], Orizzontali : ø 8 25' [cm], Integrative Dx: ø 14 25' [cm]

Sezione	Comb.	N_{Ed} [kg]	M_{12} [kgm]	M_{13} [kgm]	Sd/Sr
Base	1	1351.5	0.0	-20.2	0.05
Sommità	1	1416.5	0.0	-27.6	0.06

S.L.E.	Combinazione	N [kg]	M_{12} [kgm]	M_{13} [kgm]	σ [kg/cm²]

Base						
$\sigma_{Cls,Max}$	16	916.4	0.0	-18.8	2.8	
$\sigma_{Cls,Med}$	10	1005.2	0.0	-16.4	0.0	
$\sigma_{s,t}$	15	941.5	0.0	-18.2	172.7	
$\sigma_{s,c}$	16	916.4	0.0	-18.8	93.7	
Sommita						
$\sigma_{Cls,Max}$	16	966.4	0.0	-26.9	-0.2	
$\sigma_{Cls,Med}$	10	1055.2	0.0	-22.7	0.0	
$\sigma_{s,t}$	11	982.2	0.0	-25.8	203.1	
$\sigma_{s,c}$	16	966.4	0.0	-26.9	80.3	

Verifiche a Taglio

Nodi	Comb.	V_d [kg]	α	V_{Ed} [kg]	N_{Ed} [kg]	M_{Ed} [kg]	V_{Rcd} [kg]	V_{Rsd} [kg]	$V_{Rd,scorrimento}$ [kg]	V_S/V_R
18 30	2	110.1	1.00	110.1	1242.1	-22.9	10840.1	2407.5	4732.0	0.05

Setto : 8 19 20 10 / Sezione 1

B = 50.00 H = 50.00 [m]

Armature su ogni faccia: Verticali : ø 8 25' [cm], Orizzontali : ø 8 25' [cm], Integrative Dx: ø 14 25' [cm]

Sezione	Comb.	N_{Ed} [kg]	M_{12} [kgm]	M_{13} [kgm]	Sd/Sr
Base	1	391.6	0.0	-215.8	0.04
Sommità	1	554.1	0.0	-283.6	0.06

S.L.E.	Combinazione	N [kg]	M_{12} [kgm]	M_{13} [kgm]	σ [kg/cm²]
Base					
$\sigma_{Cls,Max}$	15	260.8	0.0	-149.9	-2.3
$\sigma_{Cls,Med}$	10	287.2	0.0	-160.4	0.0
$\sigma_{s,t}$	15	260.8	0.0	-149.9	128.0
$\sigma_{s,c}$	15	260.8	0.0	-149.9	-10.5
Sommita					
$\sigma_{Cls,Max}$	15	385.8	0.0	-199.5	-3.0
$\sigma_{Cls,Med}$	10	412.2	0.0	-211.5	0.0
$\sigma_{s,t}$	15	385.8	0.0	-199.5	175.2
$\sigma_{s,c}$	15	385.8	0.0	-199.5	-12.7

Verifiche a Taglio

Nodi	Comb.	V_d [kg]	α	V_{Ed} [kg]	N_{Ed} [kg]	M_{Ed} [kg]	V_{Rcd} [kg]	V_{Rsd} [kg]	$V_{Rd,scorrimento}$ [kg]	V_S/V_R
8 20	1	998.7	1.00	998.7	391.6	-215.8	29969.5	6656.0	8880.1	0.15

Setto : 19 30 31 20 / Sezione 1

B = 50.00 H = 50.00 [m]

Armature su ogni faccia: Verticali : ø 8 25' [cm], Orizzontali : ø 8 25' [cm], Integrative Dx: ø 14 25' [cm]

Sezione	Comb.	N_{Ed} [kg]	M_{12} [kgm]	M_{13} [kgm]	Sd/Sr
Base	1	976.4	0.0	-133.6	0.05
Sommità	1	1138.9	0.0	-364.8	0.08

S.L.E.	Combinazione	N [kg]	M_{12} [kgm]	M_{13} [kgm]	σ [kg/cm²]
Base					
$\sigma_{Cls,Max}$	20	698.0	0.0	-100.2	-0.2
$\sigma_{Cls,Med}$	10	707.6	0.0	-100.5	0.0
$\sigma_{s,t}$	15	623.9	0.0	-96.7	140.0
$\sigma_{s,c}$	16	593.2	0.0	-94.9	13.2
Sommita					
$\sigma_{Cls,Max}$	15	748.9	0.0	-250.0	-3.3
$\sigma_{Cls,Med}$	10	832.6	0.0	-269.9	0.0
$\sigma_{s,t}$	15	748.9	0.0	-250.0	252.7
$\sigma_{s,c}$	20	823.0	0.0	-267.8	-6.0

Verifiche a Taglio

Nodi	Comb.	V_d [kg]	α	V_{Ed} [kg]	N_{Ed} [kg]	M_{Ed} [kg]	V_{Rcd} [kg]	V_{Rsd} [kg]	$V_{Rd,scorrimento}$ [kg]	V_S/V_R
19 31	1	996.9	1.00	996.9	976.4	-133.6	29969.5	6656.0	8880.1	0.15

Setto : 10 20 21 11 / Sezione 1

B = 70.00 H = 50.00 [m]

Armature su ogni faccia: Verticali : ø 8 25' [cm], Orizzontali : ø 8 25' [cm], Integrative Sx: ø 14 25' [cm], Dx: ø 14 25' [cm]

Sezione	Comb.	N_{Ed} [kg]	M_{12} [kgm]	M_{13} [kgm]	Sd/Sr
Base	1	-275.9	0.0	-341.4	0.02
Sommità	1	-48.4	0.0	-396.1	0.02

S.L.E.	Combinazione	N [kg]	M_{12} [kgm]	M_{13} [kgm]	σ [kg/cm²]
Base					
$\sigma_{Cls,Max}$	15	-195.1	0.0	-232.0	-2.0
$\sigma_{Cls,Med}$	15	-195.1	0.0	-232.0	-1.0
$\sigma_{s,t}$	15	-195.1	0.0	-232.0	59.9

$\sigma_{s,c}$	15	-195.1	0.0	-232.0	-25.6
Sommita					
$\sigma_{Cls,Max}$	15	-20.1	0.0	-265.9	-2.3
$\sigma_{Cls,Med}$	15	-20.1	0.0	-265.9	-1.2
$\sigma_{s,t}$	15	-20.1	0.0	-265.9	83.7
$\sigma_{s,c}$	15	-20.1	0.0	-265.9	-28.0

Verifiche a Taglio

Nodi	Comb.	V_d [kg]	α	V_{Ed} [kg]	N_{Ed} [kg]	M_{Ed} [kg]	V_{Rcd} [kg]	V_{Rsd} [kg]	$V_{Rd,scorrimento}$ [kg]	V_S/V_R
10	21 1	1475.1	1.00	1475.1	-275.9	-341.4	42722.5	9488.3	15619.2	0.16

Setto : 20 31 32 21 / Sezione 1

B = 70.00 H = 50.00 [m]

Armature su ogni faccia: Verticali : ø 8 25' [cm], Orizzontali : ø 8 25' [cm], Integrative Sx: ø 14 25' [cm], Dx: ø 14 25' [cm]

Sezione	Comb.	N_{Ed} [kg]	M_{12} [kgm]	M_{13} [kgm]	Sd/Sr
Base	1	-744.3	0.0	-81.7	0.00
Sommità	1	-516.8	0.0	-267.3	0.01

S.L.E.	Combinazione	N [kg]	M_{12} [kgm]	M_{13} [kgm]	σ [kg/cm²]
Base					
$\sigma_{Cls,Max}$	15	-494.5	0.0	-55.4	-0.6
$\sigma_{Cls,Med}$	15	-494.5	0.0	-55.4	-0.3
$\sigma_{s,t}$	16	-474.9	0.0	-53.6	-0.7
$\sigma_{s,c}$	15	-494.5	0.0	-55.4	-8.3
Sommita					
$\sigma_{Cls,Max}$	15	-319.5	0.0	-173.3	-1.5
$\sigma_{Cls,Med}$	15	-319.5	0.0	-173.3	-0.8
$\sigma_{s,t}$	15	-319.5	0.0	-173.3	32.7
$\sigma_{s,c}$	15	-319.5	0.0	-173.3	-19.8

Verifiche a Taglio

Nodi	Comb.	V_d [kg]	α	V_{Ed} [kg]	N_{Ed} [kg]	M_{Ed} [kg]	V_{Rcd} [kg]	V_{Rsd} [kg]	$V_{Rd,scorrimento}$ [kg]	V_S/V_R
20	32 1	698.2	1.00	698.2	-744.3	-81.7	42722.5	9488.3	15619.2	0.07

Setto : 11 21 22 13 / Sezione 1

B = 30.00 H = 50.00 [m]

Armature su ogni faccia: Verticali : ø 8 25' [cm], Orizzontali : ø 8 25' [cm], Integrative Dx: ø 14 25' [cm]

Sezione	Comb.	N_{Ed} [kg]	M_{12} [kgm]	M_{13} [kgm]	Sd/Sr
Base	1	-344.7	0.0	-35.4	0.01
Sommità	1	-247.2	0.0	-46.1	0.01

S.L.E.	Combinazione	N [kg]	M_{12} [kgm]	M_{13} [kgm]	σ [kg/cm²]
Base					
$\sigma_{Cls,Max}$	15	-231.0	0.0	-23.8	-1.1
$\sigma_{Cls,Med}$	15	-231.0	0.0	-23.8	-0.6
$\sigma_{s,t}$	15	-231.0	0.0	-23.8	6.4
$\sigma_{s,c}$	15	-231.0	0.0	-23.8	-10.7
Sommita					
$\sigma_{Cls,Max}$	15	-156.0	0.0	-30.6	-1.4
$\sigma_{Cls,Med}$	15	-156.0	0.0	-30.6	-0.7
$\sigma_{s,t}$	15	-156.0	0.0	-30.6	22.1
$\sigma_{s,c}$	15	-156.0	0.0	-30.6	-10.4

Verifiche a Taglio

Nodi	Comb.	V_d [kg]	α	V_{Ed} [kg]	N_{Ed} [kg]	M_{Ed} [kg]	V_{Rcd} [kg]	V_{Rsd} [kg]	$V_{Rd,scorrimento}$ [kg]	V_S/V_R
11 22	1	163.1	1.00	163.1	-344.7	-35.4	17216.5	3823.6	8101.5	0.04

Setto : 21 32 33 22 / Sezione 1

B = 30.00 H = 50.00 [m]

Armature su ogni faccia: Verticali : ø 8 25' [cm], Orizzontali : ø 8 25' [cm], Integrative Dx: ø 14 25' [cm]

Sezione	Comb.	N_{Ed} [kg]	M_{12} [kgm]	M_{13} [kgm]	Sd/Sr
Base	1	-626.3	0.0	4.8	0.01
Sommità	1	-528.8	0.0	30.0	0.01

S.L.E.	Combinazione	N [kg]	M_{12} [kgm]	M_{13} [kgm]	σ [kg/cm²]
Base					
$\sigma_{Cls,Max}$	15	-409.9	0.0	2.7	-0.7
$\sigma_{Cls,Med}$	15	-409.9	0.0	2.7	-0.6
$\sigma_{s,t}$	16	-391.9	0.0	2.4	-7.8
$\sigma_{s,c}$	15	-409.9	0.0	2.7	-9.5
Sommita					
$\sigma_{Cls,Max}$	15	-334.9	0.0	18.4	-1.0

$\sigma_{Cls,Med}$	15	-334.9	0.0	18.4	-0.5	
$\sigma_{s,t}$	16	-316.9	0.0	17.2	-2.7	
$\sigma_{s,c}$	15	-334.9	0.0	18.4	-12.8	

Verifiche a Taglio

Nodi	Comb.	V_d [kg]	α	V_{Ed} [kg]	N_{Ed} [kg]	M_{Ed} [kg]	V_{Rcd} [kg]	V_{Rsd} [kg]	$V_{Rd,scorrimento}$ [kg]	V_S/V_R
21 33	1	-69.5	1.00	-69.5	-626.3	4.8	17216.5	3823.6	8101.5	0.02

3.7 Verifiche vasca fossa scorie

Verifiche Setti:

Setto : 171 807 808 150 / Sezione 1

B = 45.00 H = 52.00 [m]

Armature su ogni faccia: Verticali : ø 14 20' [cm], Orizzontali : ø 8 20' [cm], Integrative Dx: ø 12 25' [cm]

Sezione	Comb.	N_{Ed} [kg]	M_{12} [kgm]	M_{13} [kgm]	Sd/Sr
Base	1	-332.3	0.0	136.0	0.01
Sommità	1	-180.2	0.0	104.0	0.01

S.L.E.	Combinazione	N [kg]	M_{12} [kgm]	M_{13} [kgm]	σ [kg/cm²]
Base					
$\sigma_{Cls,Max}$	2	-255.6	0.0	104.6	-2.3
$\sigma_{Cls,Med}$	2	-255.6	0.0	104.6	-1.1
$\sigma_{s,t}$	2	-255.6	0.0	104.6	46.3
$\sigma_{s,c}$	2	-255.6	0.0	104.6	-26.9
Sommita					
$\sigma_{Cls,Max}$	2	-138.6	0.0	80.0	-1.8
$\sigma_{Cls,Med}$	2	-138.6	0.0	80.0	-0.9
$\sigma_{s,t}$	2	-138.6	0.0	80.0	41.0
$\sigma_{s,c}$	2	-138.6	0.0	80.0	-20.1

Verifiche a Taglio

Nodi	Comb.	V_d [kg]	α	V_{Ed} [kg]	N_{Ed} [kg]	M_{Ed} [kg]	V_{Rcd} [kg]	V_{Rsd} [kg]	$V_{Rd,scorrimento}$ [kg]	V_S/V_R
171 808	1	-461.6	1.00	-461.6	-332.3	136.0	26781.3	7434.8	14065.2	0.06

Setto : 807 818 819 808 / Sezione 1

B = 45.00 H = 52.00 [m]

Armature su ogni faccia: Verticali : ø 14 20' [cm], Orizzontali : ø 8 20' [cm], Integrative Dx: ø 12 25' [cm]

Sezione	Comb.	N_{Ed} [kg]	M_{12} [kgm]	M_{13} [kgm]	Sd/Sr
Base	1	23.7	0.0	79.1	0.01
Sommità	1	175.8	0.0	55.3	0.01

S.L.E.	Combinazione	N [kg]	M_{12} [kgm]	M_{13} [kgm]	σ [kg/cm²]
Base					
$\sigma_{Cls,Max}$	2	18.3	0.0	60.8	-1.3
$\sigma_{Cls,Med}$	2	18.3	0.0	60.8	0.0
$\sigma_{s,t}$	2	18.3	0.0	60.8	44.2
$\sigma_{s,c}$	2	18.3	0.0	60.8	-13.8
Sommita					
$\sigma_{Cls,Max}$	2	135.3	0.0	42.6	-0.9
$\sigma_{Cls,Med}$	2	135.3	0.0	42.6	0.0
$\sigma_{s,t}$	2	135.3	0.0	42.6	44.4
$\sigma_{s,c}$	2	135.3	0.0	42.6	-7.4

Verifiche a Taglio

Nodi	Comb.	V_d [kg]	α	V_{Ed} [kg]	N_{Ed} [kg]	M_{Ed} [kg]	V_{Rcd} [kg]	V_{Rsd} [kg]	$V_{Rd,scorrimento}$ [kg]	V_S/V_R
807 819	1	-258.5	1.00	-258.5	23.7	79.1	26781.3	7434.8	14065.2	0.03

Setto : 818 829 830 819 / Sezione 1

B = 45.00 H = 52.00 [m]

Armature su ogni faccia: Verticali : ø 14 20' [cm], Orizzontali : ø 8 20' [cm], Integrative Dx: ø 12 25' [cm]

Sezione	Comb.	N_{Ed} [kg]	M_{12} [kgm]	M_{13} [kgm]	Sd/Sr
Base	1	206.3	0.0	5.8	0.01
Sommità	1	358.4	0.0	-1.7	0.01

S.L.E.	Combinazione	N [kg]	M_{12} [kgm]	M_{13} [kgm]	σ [kg/cm²]
Base					
$\sigma_{Cls,Max}$	2	158.7	0.0	4.5	0.6
$\sigma_{Cls,Med}$	2	158.7	0.0	4.5	0.0
$\sigma_{s,t}$	2	158.7	0.0	4.5	19.5
$\sigma_{s,c}$	2	158.7	0.0	4.5	9.8
Sommita					

$\sigma_{Cls,Max}$	2	275.7	0.0	-1.3	1.7
$\sigma_{Cls,Med}$	2	275.7	0.0	-1.3	0.0
$\sigma_{s,t}$	2	275.7	0.0	-1.3	26.2
$\sigma_{s,c}$	2	275.7	0.0	-1.3	25.4

Verifiche a Taglio

Nodi	Comb.	V_d [kg]	α	V_{Ed} [kg]	N_{Ed} [kg]	M_{Ed} [kg]	V_{Rcd} [kg]	V_{Rsd} [kg]	$V_{Rd,scorrimento}$ [kg]	V_S/V_R
818 830	1	-7.9	1.00	-7.9	206.3	5.8	26781.3	7434.8	14065.2	0.00

Setto : 829 840 841 830 / Sezione 1

B = 45.00 H = 52.00 [m]

Armature su ogni faccia: Verticali : ø 14 20' [cm], Orizzontali : ø 8 20' [cm], Integrative Dx: ø 12 25' [cm]

Sezione	Comb.	N_{Ed} [kg]	M_{12} [kgm]	M_{13} [kgm]	Sd/Sr
Base	1	236.6	0.0	-56.3	0.01
Sommità	1	388.7	0.0	-54.4	0.02

S.L.E.	Combinazione	N [kg]	M_{12} [kgm]	M_{13} [kgm]	σ [kg/cm²]
Base					
$\sigma_{Cls,Max}$	2	182.0	0.0	-43.3	-0.8
$\sigma_{Cls,Med}$	2	182.0	0.0	-43.3	0.0
$\sigma_{s,t}$	2	182.0	0.0	-43.3	49.6
$\sigma_{s,c}$	2	182.0	0.0	-43.3	-1.9
Sommita					
$\sigma_{Cls,Max}$	2	299.0	0.0	-41.8	-0.6
$\sigma_{Cls,Med}$	2	299.0	0.0	-41.8	0.0
$\sigma_{s,t}$	2	299.0	0.0	-41.8	61.3
$\sigma_{s,c}$	2	299.0	0.0	-41.8	2.6

Verifiche a Taglio

Nodi	Comb.	V_d [kg]	α	V_{Ed} [kg]	N_{Ed} [kg]	M_{Ed} [kg]	V_{Rcd} [kg]	V_{Rsd} [kg]	$V_{Rd,scorrimento}$ [kg]	V_S/V_R
829 841	1	212.7	1.00	212.7	236.6	-56.3	26781.3	7434.8	14065.2	0.03

Setto : 840 851 852 841 / Sezione 1

B = 45.00 H = 52.00 [m]

Armature su ogni faccia: Verticali : ø 14 20' [cm], Orizzontali : ø 8 20' [cm], Integrative Dx: ø 12 25' [cm]

Sezione	Comb.	N_{Ed} [kg]	M_{12} [kgm]	M_{13} [kgm]	Sd/Sr
Base	1	158.8	0.0	-95.9	0.02
Sommità	1	310.9	0.0	-88.0	0.02

S.L.E.	Combinazione	N [kg]	M_{12} [kgm]	M_{13} [kgm]	σ [kg/cm²]
Base					
$\sigma_{Cls,Max}$	2	122.2	0.0	-73.8	-1.5
$\sigma_{Cls,Med}$	2	122.2	0.0	-73.8	0.0
$\sigma_{s,t}$	2	122.2	0.0	-73.8	64.2
$\sigma_{s,c}$	2	122.2	0.0	-73.8	-8.5
Sommita					
$\sigma_{Cls,Max}$	2	239.2	0.0	-67.7	-1.3
$\sigma_{Cls,Med}$	2	239.2	0.0	-67.7	0.0
$\sigma_{s,t}$	2	239.2	0.0	-67.7	72.6
$\sigma_{s,c}$	2	239.2	0.0	-67.7	-4.4

Verifiche a Taglio

Nodi	Comb.	V_d [kg]	α	V_{Ed} [kg]	N_{Ed} [kg]	M_{Ed} [kg]	V_{Rcd} [kg]	V_{Rsd} [kg]	$V_{Rd,scorrimento}$ [kg]	V_S/V_R
840 852	1	353.8	1.00	353.8	158.8	-95.9	26781.3	7434.8	14065.2	0.05

Setto : 851 862 863 852 / Sezione 1

B = 45.00 H = 52.00 [m]

Armature su ogni faccia: Verticali : ø 14 20' [cm], Orizzontali : ø 8 20' [cm], Integrative Dx: ø 12 25' [cm]

Sezione	Comb.	N_{Ed} [kg]	M_{12} [kgm]	M_{13} [kgm]	Sd/Sr
Base	1	23.7	0.0	-112.6	0.02
Sommità	1	175.8	0.0	-102.3	0.02

S.L.E.	Combinazione	N [kg]	M_{12} [kgm]	M_{13} [kgm]	σ [kg/cm²]
Base					
$\sigma_{Cls,Max}$	2	18.3	0.0	-86.6	-1.8
$\sigma_{Cls,Med}$	2	18.3	0.0	-86.6	0.0
$\sigma_{s,t}$	2	18.3	0.0	-86.6	62.2
$\sigma_{s,c}$	2	18.3	0.0	-86.6	-12.9
Sommita					
$\sigma_{Cls,Max}$	2	135.3	0.0	-78.7	-1.6
$\sigma_{Cls,Med}$	2	135.3	0.0	-78.7	0.0
$\sigma_{s,t}$	2	135.3	0.0	-78.7	69.0

$\sigma_{s,c}$	2	135.3	0.0	-78.7	-9.0	

Verifiche a Taglio

Nodi	Comb.	V_d [kg]	α	V_{Ed} [kg]	N_{Ed} [kg]	M_{Ed} [kg]	V_{Rcd} [kg]	V_{Rsd} [kg]	$V_{Rd,scorrimento}$ [kg]	V_S/V_R
851 863	1	413.3	1.00	413.3	23.7	-112.6	26781.3	7434.8	14065.2	0.06

Setto : 862 873 874 863 / Sezione 1

B = 45.00 H = 52.00 [m]

Armature su ogni faccia: Verticali : ø 14 20' [cm], Orizzontali : ø 8 20' [cm], Integrative Dx: ø 12 25' [cm]

Sezione	Comb.	N_{Ed} [kg]	M_{12} [kgm]	M_{13} [kgm]	Sd/Sr
Base	1	-113.5	0.0	-108.0	0.01
Sommità	1	38.6	0.0	-97.2	0.01

S.L.E.	Combinazione	N [kg]	M_{12} [kgm]	M_{13} [kgm]	σ [kg/cm²]
Base					
$\sigma_{Cls,Max}$	2	-87.3	0.0	-83.1	-1.8
$\sigma_{Cls,Med}$	2	-87.3	0.0	-83.1	-0.9
$\sigma_{s,t}$	2	-87.3	0.0	-83.1	48.9
$\sigma_{s,c}$	2	-87.3	0.0	-83.1	-14.5
Sommita					
$\sigma_{Cls,Max}$	2	29.7	0.0	-74.8	-1.6
$\sigma_{Cls,Med}$	2	29.7	0.0	-74.8	0.0
$\sigma_{s,t}$	2	29.7	0.0	-74.8	55.2
$\sigma_{s,c}$	2	29.7	0.0	-74.8	-10.9

Verifiche a Taglio

Nodi	Comb.	V_d [kg]	α	V_{Ed} [kg]	N_{Ed} [kg]	M_{Ed} [kg]	V_{Rcd} [kg]	V_{Rsd} [kg]	$V_{Rd,scorrimento}$ [kg]	V_S/V_R
862 874	1	394.7	1.00	394.7	-113.5	-108.0	26781.3	7434.8	14065.2	0.05

Setto : 873 884 885 874 / Sezione 1

B = 45.00 H = 52.00 [m]

Armature su ogni faccia: Verticali : ø 14 20' [cm], Orizzontali : ø 8 20' [cm], Integrative Dx: ø 12 25' [cm]

Sezione	Comb.	N_{Ed} [kg]	M_{12} [kgm]	M_{13} [kgm]	Sd/Sr

Base	1	-200.2	0.0	-88.0	0.01
Sommità	1	-48.1	0.0	-79.0	0.01

S.L.E.	Combinazione	N [kg]	M_{12} [kgm]	M_{13} [kgm]	σ [kg/cm²]
Base					
$\sigma_{Cls,Max}$	2	-154.0	0.0	-67.7	-1.4
$\sigma_{Cls,Med}$	2	-154.0	0.0	-67.7	-0.7
$\sigma_{s,t}$	2	-154.0	0.0	-67.7	31.8
$\sigma_{s,c}$	2	-154.0	0.0	-67.7	-13.2
Sommita					
$\sigma_{Cls,Max}$	2	-37.0	0.0	-60.8	-1.3
$\sigma_{Cls,Med}$	2	-37.0	0.0	-60.8	-0.6
$\sigma_{s,t}$	2	-37.0	0.0	-60.8	38.5
$\sigma_{s,c}$	2	-37.0	0.0	-60.8	-10.1

Verifiche a Taglio

Nodi	Comb.	V_d [kg]	α	V_{Ed} [kg]	N_{Ed} [kg]	M_{Ed} [kg]	V_{Rcd} [kg]	V_{Rsd} [kg]	$V_{Rd,scorrimento}$ [kg]	V_S/V_R
873 885	1	321.2	1.00	321.2	-200.2	-88.0	26781.3	7434.8	14065.2	0.04

Setto : 884 895 896 885 / Sezione 1

B = 45.00 H = 52.00 [m]

Armature su ogni faccia: Verticali : ø 14 20' [cm], Orizzontali : ø 8 20' [cm], Integrative Dx: ø 12 25' [cm]

Sezione	Comb.	N_{Ed} [kg]	M_{12} [kgm]	M_{13} [kgm]	Sd/Sr
Base	1	-207.1	0.0	-61.2	0.01
Sommità	1	-55.0	0.0	-56.0	0.01

S.L.E.	Combinazione	N [kg]	M_{12} [kgm]	M_{13} [kgm]	σ [kg/cm²]
Base					
$\sigma_{Cls,Max}$	2	-159.3	0.0	-47.0	-1.0
$\sigma_{Cls,Med}$	2	-159.3	0.0	-47.0	-0.5
$\sigma_{s,t}$	2	-159.3	0.0	-47.0	17.3
$\sigma_{s,c}$	2	-159.3	0.0	-47.0	-9.9
Sommita					
$\sigma_{Cls,Max}$	2	-42.3	0.0	-43.1	-0.9
$\sigma_{Cls,Med}$	2	-42.3	0.0	-43.1	-0.5
$\sigma_{s,t}$	2	-42.3	0.0	-43.1	25.7
$\sigma_{s,c}$	2	-42.3	0.0	-43.1	-7.5

Verifiche a Taglio

Nodi	Comb.	V_d [kg]	α	V_{Ed} [kg]	N_{Ed} [kg]	M_{Ed} [kg]	V_{Rcd} [kg]	V_{Rsd} [kg]	$V_{Rd,scorrimento}$ [kg]	V_S/V_R
884 896	1	225.3	1.00	225.3	-207.1	-61.2	26781.3	7434.8	14065.2	0.03

Setto : 895 906 907 896 / Sezione 1

B = 45.00 H = 52.00 [m]

Armature su ogni faccia: Verticali : ø 14 20' [cm], Orizzontali : ø 8 20' [cm], Integrative Dx: ø 12 25' [cm]

Sezione	Comb.	N_{Ed} [kg]	M_{12} [kgm]	M_{13} [kgm]	Sd/Sr
Base	1	-136.4	0.0	-30.0	0.00
Sommità	1	15.7	0.0	-28.1	0.00

S.L.E.	Combinazione	N [kg]	M_{12} [kgm]	M_{13} [kgm]	σ [kg/cm²]
Base					
$\sigma_{Cls,Max}$	2	-104.9	0.0	-23.1	-0.5
$\sigma_{Cls,Med}$	2	-104.9	0.0	-23.1	-0.2
$\sigma_{s,t}$	2	-104.9	0.0	-23.1	6.3
$\sigma_{s,c}$	2	-104.9	0.0	-23.1	-5.2
Sommita					
$\sigma_{Cls,Max}$	2	12.1	0.0	-21.6	-0.4
$\sigma_{Cls,Med}$	2	12.1	0.0	-21.6	0.0
$\sigma_{s,t}$	2	12.1	0.0	-21.6	16.3
$\sigma_{s,c}$	2	12.1	0.0	-21.6	-3.1

Verifiche a Taglio

Nodi	Comb.	V_d [kg]	α	V_{Ed} [kg]	N_{Ed} [kg]	M_{Ed} [kg]	V_{Rcd} [kg]	V_{Rsd} [kg]	$V_{Rd,scorrimento}$ [kg]	V_S/V_R
895 907	1	111.7	1.00	111.7	-136.4	-30.0	26781.3	7434.8	14065.2	0.02

3.8 Verifiche spostamenti SLD

Combinazioni agli Stati Limite di Danno

Massimi spostamenti differenziali orizzontali

Fattore moltiplicativo spostamenti dovuti al sisma b 1

- c 1
- Controllo degli spostamenti di interpiano dU inferiore a 0.005 H

Comb.	Ux		Uy		Uz		|Uxyz|	
	Nodi	Ux [cm]	Nodi	Uy [cm]	Nodi	Uz [cm]	Nodi	|Uxyz| [cm]
21	34-244	0.84	54-273	0.52	35-245	-0.01	170-253	0.97
22	34-244	0.77	54-273	0.38	37-247	0.01	170-253	0.85
23	34-244	0.34	54-273	0.84	37-247	0.00	170-253	0.88
24	50-258	0.27	53-271	0.66	40-145	-0.00	39-252	0.70

Spostamenti Max in direzione Ux [cm]

Nodi	Comb.	21	22	23	24
34 244	21	**0.84**	0.77	0.34	0.24
34 244	22	0.84	**0.77**	0.34	0.24
34 244	23	0.84	0.77	**0.34**	0.24
50 258	24	0.59	0.62	0.23	**0.27**

Spostamenti Max in direzione Uy [cm]

Nodi	Comb.	21	22	23	24
54 273	21	**0.52**	0.38	0.84	0.65
54 273	22	0.52	**0.38**	0.84	0.65
54 273	23	0.52	0.38	**0.84**	0.65
53 271	24	0.42	0.32	0.80	**0.66**

Spostamenti Max in direzione Uz [cm]

Nodi	Comb.	21	22	23	24
35 245	21	**-0.01**	-0.01	-0.00	0.00
37 247	22	0.01	**0.01**	0.00	0.00
37 247	23	0.01	0.01	**0.00**	0.00
40 145	24	0.00	0.00	-0.00	**-0.00**

Spostamenti Max in direzione |Uxyz| [cm]

Nodi	Comb.	21	22	23	24
170 253	21	**0.97**	0.85	0.88	0.69
170 253	22	0.97	**0.85**	0.88	0.69
170 253	23	0.97	0.85	**0.88**	0.69

39 252 24 0.94 0.84 0.87 **0.70**

Spostamenti Massimi :

- Combinazione di Carico **21**
- Fra i nodi **170 253**
- In direzione **|Uxyz|**
- Spostamento **0.97**

Non si sono rilevati spostamenti di interpiano superiori a 0.005000 H

du/H x 1000 Max in direzione Ux

Nodi	dx [cm]	dy [cm]	H [cm]	L [cm]	Comb.	21	22	23	24
34 244	0.00	0.00	2194.00	2194.00	21	**0.384**	0.351	0.154	0.108
34 244	0.00	0.00	2194.00	2194.00	22	0.384	**0.351**	0.154	0.108
34 244	0.00	0.00	2194.00	2194.00	23	0.384	0.351	**0.154**	0.108
50 258	0.00	0.00	2194.00	2194.00	24	0.268	0.281	0.106	**0.123**

du/H x 1000 Max in direzione Uy

Nodi	dx [cm]	dy [cm]	H [cm]	L [cm]	Comb.	21	22	23	24
54 273	0.00	0.00	2246.00	2246.00	21	**0.230**	0.169	0.374	0.290
54 273	0.00	0.00	2246.00	2246.00	22	0.230	**0.169**	0.374	0.290
54 273	0.00	0.00	2246.00	2246.00	23	0.230	0.169	**0.374**	0.290
53 271	0.00	0.00	2246.00	2246.00	24	0.189	0.145	0.356	**0.295**

du/H x 1000 Max in direzione Uz

Nodi	dx [cm]	dy [cm]	H [cm]	L [cm]	Comb.	21	22	23	24
35 245	0.00	0.00	2194.00	2194.00	21	**-0.003**	-0.003	-0.000	0.000
37 247	0.00	0.00	2194.00	2194.00	22	0.003	**0.003**	0.002	0.001
37 247	0.00	0.00	2194.00	2194.00	23	0.003	0.003	**0.002**	0.001
40 145	0.00	0.00	1220.00	1220.00	24	0.001	0.000	-0.002	**-0.003**

du/H x 1000 Max in direzione |Uxyz|

Nodi	dx [cm]	dy [cm]	H [cm]	L [cm]	Comb.	21	22	23	24
170 253	0.00	0.00	834.00	834.00	21	**1.160**	1.015	1.061	0.833
170 253	0.00	0.00	834.00	834.00	22	1.160	**1.015**	1.061	0.833
170 253	0.00	0.00	834.00	834.00	23	1.160	1.015	**1.061**	0.833
39 252	0.00	0.00	2194.00	2194.00	24	0.430	0.381	0.395	**0.321**

3.9 Verifiche resistenza al fuoco

La realizzazione del corpo di collegamento tra la fossa esistente descritta in precedenza e la tramoggia di caricamento della nuova linea di termovalorizzazione, determina un'apertura sulla parete REI120 esistente al fine di permettere il passaggio del carroponte di alimentazione. Questa apertura determina l'ampliamento della zona di carico d'incendio del comparto fossa, unificandolo con quello del nuovo corpo di collegamento.

Per quanto riguarda la zona fossa, rimangono valide le considerazioni e le protezioni elencate al punto precedente. Nel presente capitolo verranno illustrate le valutazioni derivanti da la sopra dichiarata apertura nella nuova zona di collegamento.

Il locale in oggetto ha la funzione di permettere il prolungamento delle vie di corsa del carroponte esistente, dall'attuale comparto fossa di stoccaggio rifiuti fino alla bocca di alimentazione della nuova linea di termovalorizzazione. La realizzazione di una struttura chiusa è stata dettata dalla necessita di confinare l'eventuale dispersione del rifiuto durante le fasi di movimentazione dalla fossa alla tramoggia di carico.

La fossa rifiuti è in grado di resistere ad una CLASSE D'INCENDIO R 120 ed è compartimentata in CLASSE REI 120 per confinare un eventuale incendio contro la propagazione in altre zone non aventi di per sé carico di incendio e quindi neanche rischio di incendio.

L'eliminazione della parete divisoria per permettere il passaggio del carroponte, amplia la superficie da considerare nella determinazione del carico d'incendio specifico dell'area in questione.

Pur mantenendo, per la parte fossa esistente, tutte le caratteristiche di resistenza e tutti i presidi nonché le vie di fuga già presenti, per quanto riguarda la zona in ampliamento è stato rideterminato il carico d'incendio alla luce dell'ampliamento.

Nella tabella sottostante sono riportati i materiali combustibili presenti all'interno del compartimento, con le relative quantità, poteri calorifici e calore sviluppabile.

Materiale	m	Ψ	Qnt	H	Calore totale [MJ]
RSU	1.00	1.00	113400 kg	8.16 MJ/kg	925344.00
SOTTOVALLO	1.00	1.00	52500 kg	4.10 MJ/kg	215250.00

Il compartimento ha una superficie di 1200 m^2.
Il calore complessivamente sviluppabile è pari a 1140594 MJ.
Il carico incendio specifico $\mathbf{q_f}$ determinato usando la (2) risulta pari a:

q_f = 950.5 MJ/m^2.

Il fattore δ_{q1} è pari a 1.4.
Il fattore δ_{q2} è pari a 1.2.

Misure di protezione
Le misure di protezione adottate sono:
Sistemi automatici di estinzione: Acqua [0.60]
Sistemi di evacuazione automatica di fumo e calore: Assente [1.00]
Sistemi automatici di rilevazione, segnalazione e allarme antincendio: Presente [0.85]
Squadra aziendale dedicata alla lotta antincendio: Assente [1.00]
Rete idrica antincendio: Interna [0.90]
Percorsi protetti di accesso: Presente [0.90]
Accessibilità ai mezzi di soccorso VV.F.: No [1.00]

Pertanto il fattore $\boldsymbol{\delta_n}$ è pari a **0.41**.

Il valore del carico d'incendio specifico di progetto ($q_{f,d}$), applicando la (1), risulta:

$q_{f,d}$= 659.65 MJ/m^2.

Essendo il livello di prestazione richiesto pari a Liv. III, la classe dell'ambiente risulta essere:

CLASSE = 60.
Verifica
Elemento compartimentazione: Parete perimetrale con esterno
Il locale sarà perimetralmente chiuso con due tipologie specifiche di tamponature: pannelli in policarbonato e pannelli tipo sandwiches.

Nota: si precisa che gli elementi di tamponatura perimetrale non sono elementi di suddivisione tra compartimenti contigui essendo essi elementi di separazione dell'unico compartimento principale con l'ambiente esterno. A tale proposito, detti elementi, non dovranno necessariamente avere dei requisiti specifici di reazione al fuoco.

Per completezza si riportano le caratteristiche principali di detti elementi.

Pannelli in policarbonato
Pannelli modulari di policarbonato alveolare coestruso (con protezione esterna ai raggi U.V.), spessore 40mm su tutta la sezione. Coefficiente di trasmissione termica K= 1,4 W/m^{2}K, ottenuto con camere d'aria all'interno del pannello (minimo due).

Le lastre in policarbonato alveolare coestruso sono componenti altamente impiegati in edilizia, con una struttura alveolare multiparete che non solo li rende leggeri, facili da utilizzare e da posare, ma anche molto resistenti ad urti e carichi. Le lastre assicurano inoltre un'elevata trasmittanza luminosa, oltre ad essere più sicure e più pratiche rispetto ad analoghe realizzazioni in vetro, le loro qualità isolanti determinano un sensibile abbattimento dei costi energetici. Garantiscono anche un'elevata resistenza agli effetti degradanti delle radiazioni solari. Queste peculiarità rendono le lastre in policarbonato adatte ad un campo di applicazioni estremamente vasto: finestrature fisse e apribili, shed, tamponamenti, zone trasparenti in accoppiamento con pannelli sandwich, pareti divisorie.

La loro versatilità si presta perfettamente all'impiego in edilizia industriale, con l'inserimento in tutte le strutture che debbano assicurare leggerezza e luminosità.

Pannelli tipo sandwiches rivestiti in lamiera metallica lamiera grecata con isolante termico e acustico

a) Supporti Metallici Esterni
-Acciaio conforme alla norma EN10147 tipo Fe E 250 G
-Alluminio lega 3103 H16
-Acciaio Inox AISI 304
b) Supporti Metallici Interni
- Acciaio zincato preverniciato
c) Isolante

Lo strato isolante verrà realizzato in schiuma di poliuretano.

Riassumendo:

Tipo di parete	Classe di reazione al fuoco
Tamponamento verticale con pannelli modulari di policarbonato alveolare coestruso	EuroClass Bs1 d0
Pannelli tipo sandwiches rivestiti in lamiera metallica lamiera grecata con isolante termico e acustico	Reazione al fuoco: non combustibile

Nel caso in cui il tamponamento dovesse fungere da elemento di separazione tra compartimenti, in base a quanto detto nel presente paragrafo le strutture impiegate per la realizzazione del compartimento avranno requisiti EI 60. Requisito attestato dalla certificazione rilasciata dal costruttore.

Elemento portante: pilastri in cemento armato

Parametro	Valore
Tipo struttura	Pilastro in cemento armato
Tipo sezione	Rettangolare

Lato piccolo (B)	700 mm
Distanza dall'asse (a)	60 mm
Esposizione al fuoco	Su più lati
Tipo armatura	Pretesa
Intonaco	Assente
Spessore intonaco	0 mm

In base alla tipologia costruttiva e al dimensionamento, la struttura portante ha un R pari a **90**. Il valore di (a) non sarà inferiore ai minimi di regolamento per le opere di c.a. e c.a.p. Nel calcolo si è aumentato il valore di (a) di 15 mm per tenere conto dell'armatura Pre-Tesa. In caso di ricomprimento di calcestruzzo superiore a 50 mm si prevederà una armatura diffusa aggiuntiva tale da assicurare la stabilità del ricoprimento.
L'area complessiva di armatura (As) sarà minore o uguale a 0,04 volte l'area efficace della sezione trasversale del pilastro (Ac)..

Elemento orizzontale: SOLAIO
Descrizione:

Parametro	**Valore**
Tipologia elementi	Solai misti di lamiera di acciaio con riempimenti di calcestruzzo
Spessore totale Solaio (H)	200 mm
Tipo armatura	Pretesa
Distanza dall'asse delle armature (a)	40 mm
Presenza intonaco	Nessun intonaco
Tipo Intonaco	Non presente
Spessore strato materiale isolante (h)	70 mm
Spessore strato c.a. (d)	130 mm

In base alla tipologia costruttiva e al dimensionamento, la struttura di compartimentazione è sufficiente a garantire i requisiti EI per la classe 60 e il requisito R per la classe 60. Nel calcolo si è aumentato il valore di (a) di 15 mm per tenere conto dell'armatura pre-tesa.